E OF COLORADO
E DEPARTMENT OF HIGHWAYS
SION OF HIGHWAYS:
. H. FORM NO. 126:
FEB. 1984

AS CONSTRUCTED			
NO REVISIONS 9/30/87	REVISED		VOID

FED.ROAD REGION	DIVISION	PROJ. NO.	SHEET NO.	SHEET TOTALS
VIII	COLO.	IR 25-2(187)	92	~~170~~ 177

REVISIONS			
R-1	6-5-86	Revised Note, Reinforcing Steel	J.K.K.

BRIDGE STANDARD O

GENERAL NOTES

ALL WORK SHALL BE DONE ACCORDING TO THE STANDARD SPECIFICATIONS OF THE DIVISION OF HIGHWAYS, STATE OF COLORADO, APPLICABLE TO THE PROJECT.

STRUCTURE EXCAVATION AND BACKFILL SHALL BE IN ACCORDANCE WITH STANDARD M-206-2.

EXPANSION JOINT MATERIAL SHALL MEET AASHTO SPECIFICATION M-213.

ALL STRUCTURAL STEEL SHALL BE AASHTO M-183 (ASTM A-36) UNLESS OTHERWISE NOTED.

CLASS 1 FINISH, FOLLOWED BY APPLICATION OF A COLORED ACRYLIC COATING, WILL BE REQUIRED ON ALL EXPOSED CONCRETE SURFACES DOWN TO 1'-0" BELOW GROUND LINE. REQUIREMENTS FOR COATING ARE GIVEN IN REVISION OF SECTION 601, STRUCTURAL CONCRETE (COATING).

ALL EXTERIOR CONCRETE CORNERS SHALL BE CONSTRUCTED WITH 3/4" CHAMFERS, UNLESS OTHERWISE NOTED.

R-1 GRADE 60 REINFORCING STEEL IS REQUIRED FOR #4 BARS AND LARGER. ALL REINFORCING STEEL SHOWN AND DETAILED WITHIN THIS SET OF DRAWINGS, WHETHER NOTED WITH THE SYMBOL (E.C.) OR NOT, SHALL BE EPOXY COATED.

THE FOLLOWING TABLE GIVES THE MINIMUM LAP SPLICE LENGTH FOR REINFORCING BARS:

BAR SIZE	#4	#5	#6	#7	#8	#9	#10	#11
SPLICE LENGTH FOR CLASS A CONCRETE	1'-0"	1'-3"	1'-8"	2'-3"	3'-0"	3'-10"	4'-10"	5'-11"
SPLICE LENGTH FOR CLASS D & S CONCRETE	1'-0"	1'-3"	1'-6"	2'-0"	2'-7"	3'-4"	4'-2"	5'-1"

THE ABOVE SPLICE LENGTHS SHALL BE INCREASED BY 20 PERCENT FOR 3 BAR BUNDLES AND 33 PERCENT FOR 4 BAR BUNDLES.

ANY SPLICES NOT SHOWN SHALL BE APPROVED BY THE ENGINEER.

APPLIED WIND LOADS AND EARTHQUAKE LOADS WERE NOT CONSIDERED IN ANALYZING THE STRUCTURE FOR STABILITY DURING THE CONSTRUCTION STAGES.

E.F. = EACH FACE
F.F. = FAR FACE
N.F. = NEAR FACE

T.F. = TOP FACE
B.F. = BOTTOM FACE
E.C. = EPOXY COATED

FOR STRUCTURE NUMBER INSTALLATION, SEE STANDARD S-614-12.

PERMANENT STEEL BRIDGE DECK FORMS MAY BE USED, AT THE CONTRACTOR'S OPTION, AT NO ADDITIONAL COST TO THE STATE OF COLORADO. NO STEEL BRIDGE DECK FORMS WILL BE ALLOWED ON THE CANTILEVER PORTION OF THE DECK.

THE INFORMATION SHOWN ON THESE PLANS CONCERNING TYPE AND LOCATION OF UNDERGROUND UTILITIES IS NOT GUARANTEED TO BE ACCURATE OR ALL INCLUSIVE. THE CONTRACTOR IS RESPONSIBLE FOR MAKING HIS OWN DETERMINATION AS TO THE TYPE AND LOCATION OF UNDERGROUND UTILITIES AS MAY BE NECESSARY TO AVOID DAMAGE TO THEM.

DESIGN NOTES

CURRENT AASHTO SPECIFICATIONS:

LIVE LOAD: AASHTO HS-20-44 AND INTERSTATE ALTERNATE
DEAD LOAD: ASSUMES 48 LBS. PER SQ. FT. FOR BITUMINOUS PAVEMENT
ASSUMES 7 LBS. PER SQ. FT. FOR CONCRETE FORMWORK

REINFORCED CONCRETE:

CLASS A CONCRETE: fc = 1,200 psi, n = 9
CLASS D CONCRETE: fc = 1,800 psi, n = 8
CLASS S CONCRETE: fc = 2,000 psi, n = 7

REINFORCING STEEL: #4 BARS AND LARGER: fs = 24,000 psi

STRUCTURAL STEEL: AASHTO M-183 (ASTM A-36) fs = 20,000 psi

PRESTRESSED CONCRETE:

CLASS S CONCRETE: f'c = 5,000 psi

PRESTRESSING STEEL: f's = 270,000 psi

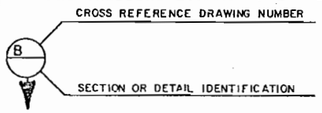

INDEX OF DRAWINGS

B-1 GENERAL INFORMATION
B-2 SUMMARY OF QUANTITIES
B-3 GENERAL LAYOUT - UNIT 1
B-4 GENERAL LAYOUT - UNIT 2
B-5 GENERAL LAYOUT - SECTIONS
B-6 ENGINEERING GEOLOGY
B-7 BRIDGE HYDRAULIC INFORMATION
B-8 CONSTRUCTION LAYOUT - FOOTING AND PILING LAYOUT
B-9 CONSTRUCTION LAYOUT - PILING LAYOUT
B-10 CONSTRUCTION LAYOUT - PILING LAYOUT
B-11 CONSTRUCTION LAYOUT - PILING LAYOUT
B-12 ABUTMENT 1 DETAILS
B-13 ABUTMENT 8 DETAILS
B-14 WINGWALL DETAILS
B-15 WINGWALL AND RETAINING WALL DETAILS
B-16 PIER 2 DETAILS
B-17 PIER 3 DETAILS
B-18 PIER 4 DETAILS
B-19 PIER 4 SECTIONS
B-20 PIERS DETAILS - PIERS 5, 6 & 7
B-21 BEARING DETAILS (TYPE III)
B-22 DECK PLAN - UNIT 1
B-23 DECK PLAN - UNIT 1
B-24 DECK PLAN - UNIT 2
B-25 DECK PLAN - UNIT 2
B-26 SUPERSTRUCTURE DETAILS (SECTIONS) - UNIT 1
B-27 SUPERSTRUCTURE DETAILS (SECTIONS) - UNIT 1
B-28 SUPERSTRUCTURE DETAILS (SECTIONS) - UNIT 2
B-29 DIAPHRAGM DETAILS
B-30 DIAPHRAGM SECTIONS
B-31 SUPERSTRUCTURE DETAILS
B-32 SUPERSTRUCTURE DETAILS - UNIT 1
B-33 SUPERSTRUCTURE DETAILS - UNIT 1
B-34 SUPERSTRUCTURE DETAILS - UNIT 1
B-35 SUPERSTRUCTURE DETAILS - UNIT 1
B-36 SUPERSTRUCTURE DETAILS - UNIT 2
B-37 SUPERSTRUCTURE DETAILS - UNIT 2
B-38 SUPERSTRUCTURE DETAILS - WEB FLARES
B-39 SUPERSTRUCTURE DEFLECTIONS
B-40 POST-TENSIONING ANCHORAGE DETAILS - UNIT 1
B-41 CAST-IN-PLACE PRESTRESSED GIRDER DETAILS
B-42 BOX GIRDER DETAILS
B-43 EXPANSION DEVICE (0-9 INCH) - PIER 4
B-44 EXPANSION DEVICE (0-9 INCH) - PIER 4
B-45 COVER PLATE DETAILS - PIER 4
B-46 BRIDGE RAIL TYPE 4.
B-47 SIGN BRIDGE BASE DETAILS
B-48 BRIDGE DRAIN DETAILS
B-49 BRIDGE DECK ELEVATIONS AND DECK/APPROACH CONTOURS
B-50 BRIDGE DECK ELEVATIONS AND DECK/APPROACH CONTOURS

BRIDGE DESCRIPTION

UNIT 1: 3-SPAN (121'-1 1/2", 129'-0", 108'-8 5/8"), F-16-NK
UNIT 2: 4-SPAN (115'-4 5/8", 150'-0", 150'-0", 121'-3"), F-16-OE
EACH UNIT CONTINUOUS POST-TENSIONED CAST-IN-PLACE CONCRETE BOX GIRDER BRIDGE.

OVER SOUTH PLATTE RIVER.
VARIABLE ROADWAY WIDTH AND SKEW.
1'-6" CONCRETE BARRIERS. BRIDGE RAIL TYPE 4.

De Leuw, Cather & Company Denver, CO

COLORADO REGISTERED ROGER D. KOESTER 23409 PROFESSIONAL ENGINEER

Roger D. Koester 1-20-86
Reviewed 2-24-86
BRIDGE ENGINEER DATE

DIVISION OF HIGHWAYS

GENERAL INFORMATION

Station 706+84.50 TO
Station 715+85.61 (RAMP F)

Near Denver Sec 9	T4S R68W		
Designer R. KOESTER		Structure Numbers	F-16-NK
Detailer HINSHAW, PANNING			F-16-OE
Drawing Number B-1	of 50	Drawings	

(11-1-79)

Revision Dates							(Preliminary Stage Only)
							0

DESIGNED BY	INITIAL	DATE	CHECKED BY	DATE
	RDK	10-85		
CHECKED BY	JLS	1-86	QUANTITIES BY	1-86
DETAILED BY	RMH,RP	10-85	CHECKED BY	10-85
				R.MH 12-85
				Y.K. 1-86

OF COLORADO
DEPARTMENT OF HIGHWAYS
ON OF HIGHWAYS:
H. FORM NO. 126:
EB. 1984

AS CONSTRUCTED		
NO REVISIONS	REVISED 9/30/87	VOID

FED.ROAD REGION	DIVISION	PROJ. NO.	SHEET NO.	SHEET TOTALS
VIII	COLO.	IR 25-2(187)	93	~~170~~ 177

REVISIONS			
R-1	6-5-86	Rev. Quantities, Reinforcing Steel	J.K.K.

SUMMARY OF QUANTITIES

	ITEM	DESCRIPTION	UNIT	STR. F-16-NK SUPER-STRUCTURE UNIT 1	STR F-16-OE SUPER-STRUCTURE UNIT 2	STRUCTURE NUMBER F-16-NK ABUT. 1	PIER 2	PIER 3	PIER 4	STRUCTURE NUMBER F-16-OE PIER 5	PIER 6	PIER 7	ABUT. 8	AS CONSTRUCTED STR F-16-NK TOTALS	STR. F-16-OE TOTALS	STR. F-16-NK AND F-16-OE TOTALS
[5]	206	STRUCTURE EXCAVATION	CU. YD.			113	601	503	668	284	259	213		1885	756	2641
	206	STRUCTURE BACKFILL (CLASS 1)	CU. YD.			237							348	237	348	585
[5]	206	STRUCTURE BACKFILL (CLASS 2)	CU. YD.				432	459	554	236	211	166		1445	613	2058
	403	HOT BITUMINOUS PAVEMENT														
		(GRADING EX)(HAUL AND ASPHALT)	TON	285	247									~~285~~ 336.06	~~247~~ 542.19	~~532~~ 628.21
	502	DRILLING HOLE TO FACILITATE PILE DRIVING	LIN. FT.			140							80	140	80	220
	502	STEEL PILING (HP10x42)	LIN. FT.										595		~~595~~ 613	~~595~~ 613
[1]	502	STEEL PILING (HP12x53)	LIN. FT.			493							446	~~493~~ 422	~~446~~ 464	~~939~~ 886
	502	STEEL PILING (HP14x102)	LIN. FT.					701	643	342	311	402		~~1344~~ 1144	~~1055~~ 983	~~2399~~ 2127
	506	RIPRAP	CU. YD.			348								~~348~~ 336		~~348~~ 336
	506	PLASTIC FILTER CLOTH	SQ. YD.			453								~~453~~ 415		~~453~~ 415
[3]	509	STRUCTURAL STEEL	LB.	1251	556									1251	556	1807
[4]	509	STRUCTURAL STEEL (GALVANIZED)	LB.	1600	709		1968	536	3454					~~7558~~ 8176	709	~~8267~~ 8885
	512	BEARING DEVICE (TYPE III)	EACH				3		6					9		9
	513	BRIDGE DRAIN (SPECIAL)	EACH	2	2									2	2	4
	515	WATERPROOFING (MEMBRANE)	SQ. YD.	2,635	2,287									2,635	2,287	4,922
	518	BRIDGE COMPRESSION JOINT SEALER	LIN. FT.			18							18	18	~~18~~ 19	~~36~~ 37
	518	WATERSTOP (6 INCH)	LIN. FT.			24							21	24	~~21~~ 20	~~45~~ 44
	518	BRIDGE EXPANSION DEVICE (0-9 INCH)	LIN. FT.	43										43		43
	601	CONCRETE CLASS A(BRIDGE)	CU. YD.			44.5	264.5	186.1	211.4	43.4	43.4	43.4	46.8	707	177	884
	601	CONCRETE CLASS D(BRIDGE)	CU. YD.		62.5		46.4	88.3	89.3	43.4	43.5	44.6		224	194	418
	601	CONCRETE CLASS S(BRIDGE)	CU. YD.	1798	1,416	38.3							25.4	~~1837~~ 1838.52	1442	~~3279~~ 3280.52
														533,132	379,590	912,722
R-1	602	REINFORCING STEEL (EPOXY COATED)	LB.	381,074	295,673	5817	51628	51266	43137	21296	13567	21567	5453	~~532,922~~	~~357,556~~	~~890,478~~
R-1																
	606	BRIDGE RAIL TYPE 4	LIN. FT.	736	1124									~~736~~ 752	~~1124~~ 1148	~~1860~~ 1900
	613	2 INCH ELECTRICAL CONDUIT	LIN. FT.	820	553									~~820~~ 838	553	~~1373~~ 1371
	613	4 INCH ELECTRICAL CONDUIT	LIN. FT	350	540									350	540	890
[2]	618	PRESTRESSING STEEL WIRE OR STRAND	LB.	98,929	103,152									98,929	103,152	202,081

NOTES:

[1] HPS 10x57 May be used in lieu of HP 12x53 at original bid price.

[2] This item includes furnishing, placing in the concrete, and post-tensioning the prestressing steel. The Contractor shall furnish all stressing equipment and accessories required for installation and stressing operations. Weight shall not be remeasured, but shall be the quantity shown.

[3] Includes 1807 Lbs. AASHTO M-105 gray iron castings for access manholes.

[4] Includes 3661 Lbs. AASHTO M-183 (ASTM A-36) steel for access manholes, pier nosings, and pintle slots. Includes 4606 Lbs. ASTM A-53, Grade B steel for pintles.

[5] Structural Excavation and Structural Backfill (Class 2) for Pier 2 assumes a vertical excavation surface supported by temporary shoring and bracing. Structural Excavation for Pier 2 shall include all pumping, bailing, draining, Sheeting, bracing and incidentals required for proper execution of the work.

	INITIAL	DATE	CHECKED BY	INITIAL	DATE	QUANTITIES BY	INITIAL	DATE
DESIGNED BY	J.L.S.	10-85		J.L.S.	10-85		R.M.H.	11-85
CHECKED BY	M.R.H.	1-86				CHECKED BY	Y.K.	1-86
DETAILED BY	S.Y.S.	10-85						

De Leuw, Cather & Company Denver, CO.

DIVISION OF HIGHWAYS

SUMMARY OF QUANTITIES

Designer	J. Stapleton	Structure Numbers	F-16-NK
Detailer	S. Shibao		F-16-OE
Drawing Number	B-2 of 50 Drawings		

Revision Dates (Preliminary Stage Only)

OF COLORADO
DEPARTMENT OF HIGHWAYS
ON OF HIGHWAYS:
H. FORM NO. 126:
EB. 1984

AS CONSTRUCTED			
NO REVISIONS		REVISED 9/30/87	VOID

FED. ROAD REGION	DIVISION	PROJ. NO.	SHEET NO.	SHEET TOTALS
VIII	COLO.	IR25-2(187)	94	~~110~~ 177

REVISIONS

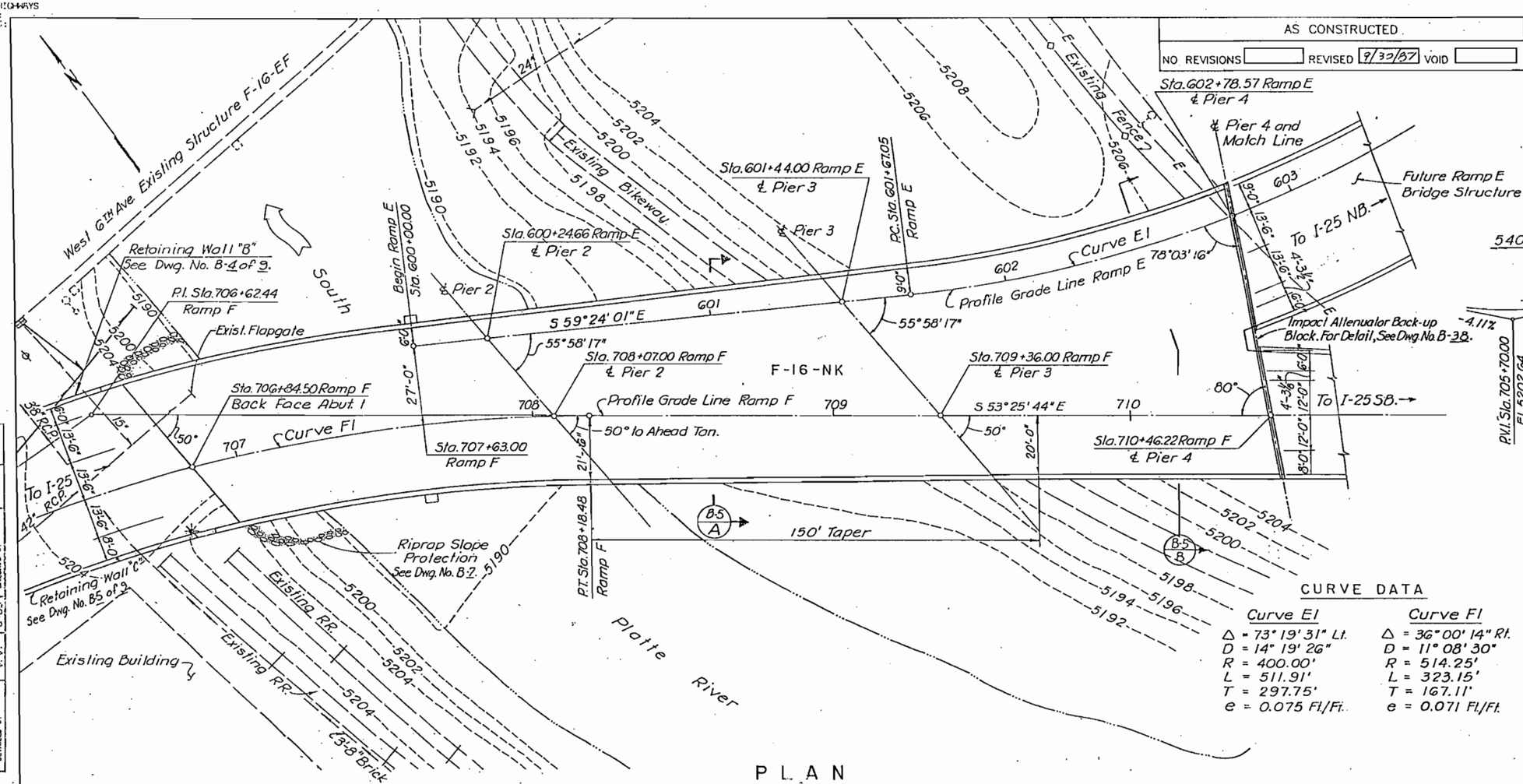

PLAN

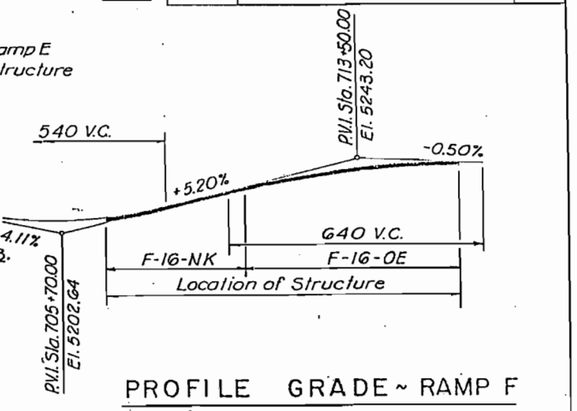

PROFILE GRADE ~ RAMP F

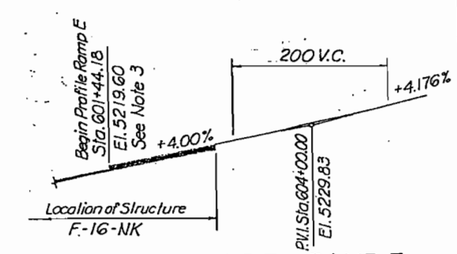

PROFILE GRADE ~ RAMP E

CURVE DATA

Curve E1	Curve F1
Δ = 73° 19' 31" Lt.	Δ = 36° 00' 14" Rt.
D = 14° 19' 26"	D = 11° 08' 30"
R = 400.00'	R = 514.25'
L = 511.91'	L = 323.15'
T = 297.75'	T = 167.11'
e = 0.075 Ft/Ft.	e = 0.071 Ft/Ft.

NOTES:

1. Live Loading - HS 20-44 and Interstate Alternate.
2. For Adjacent Bridge Structure F-16-OE Unit (2), See Dwg. No. B-4.
3. Ramp E Profile below Sta. 601+44.18 is controlled by Ramp F Profile and Superelevations.

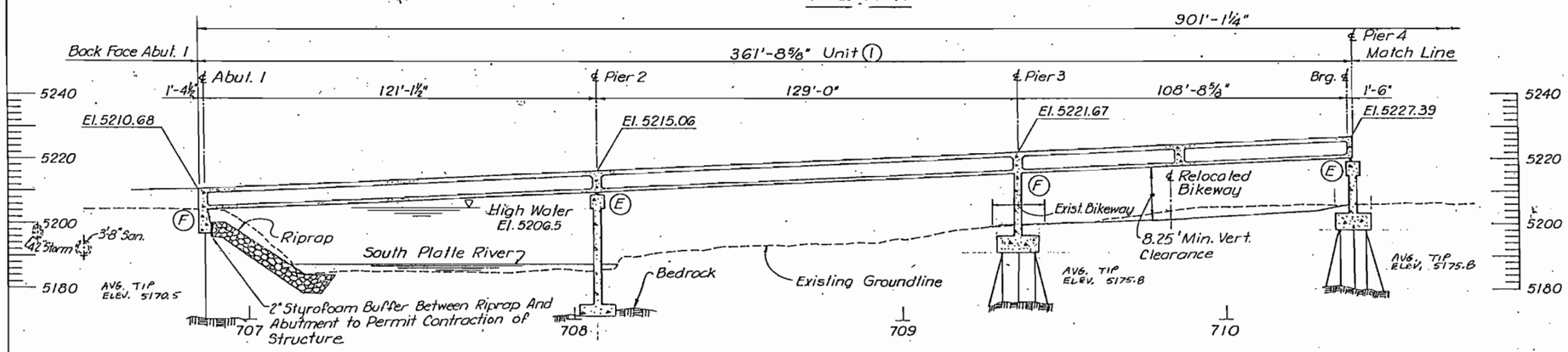

SECTION

Taken at Profile Grade Line Ramp F

De Leuw, Cather & Company Denver, CO

DIVISION OF HIGHWAYS

GENERAL LAYOUT

UNIT (1)

Designer J. Stapleton		Structure Numbers	F-16-NK
Detailer V. Villao			
Drawing Number B-3	of 50	Drawings	

Revision Dates (Preliminary Stage Only)

	INITIAL		CHECKED BY
DESIGNED BY	J.S.	8-85	
CHECKED BY	M.M.	8-85	QUANTITIES BY
DETAILED BY	V.V.	8-85	CHECKED BY

OF COLORADO
DEPARTMENT OF HIGHWAYS
ION OF HIGHWAYS:
H. FORM NO. 126:
FEB. 1984

REVISIONS		

AS CONSTRUCTED			
NO REVISIONS		REVISED 9/30/87	VOID

FED. ROAD REGION	DIVISION	PROJ. NO.	SHEET NO.	SHEET TOTALS
VIII	COLO.	IR25-2(187)	95	~~170~~ 177

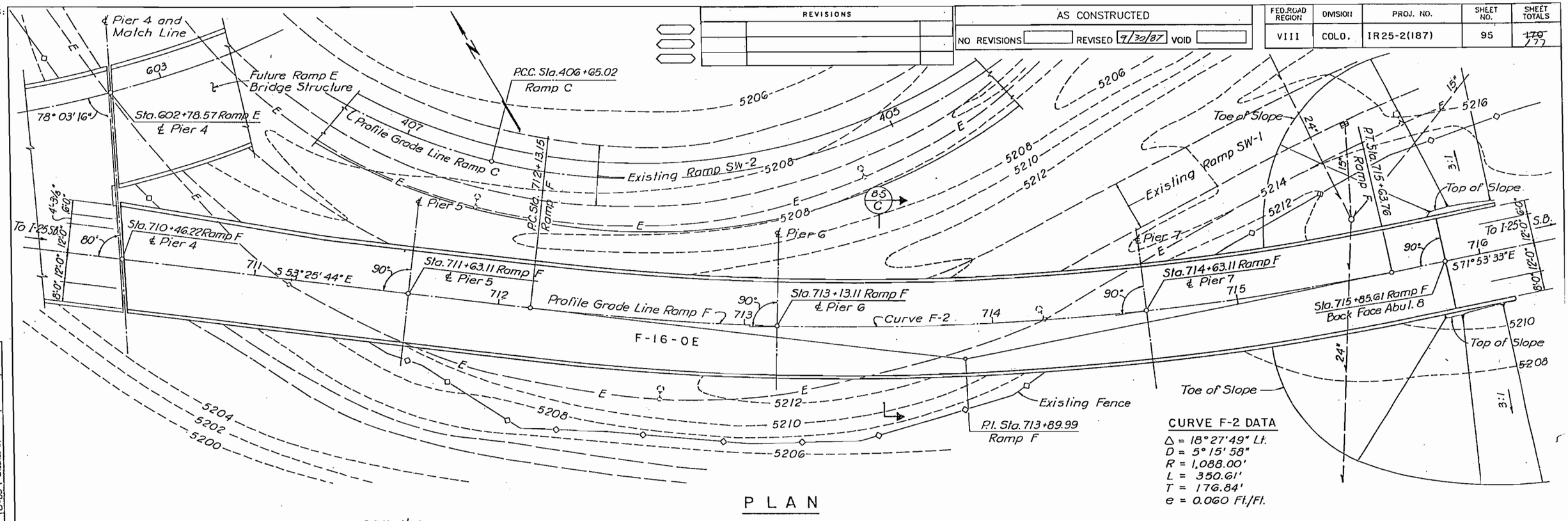

CURVE F-2 DATA

Δ = 18° 27' 49" Lt.
D = 5° 15' 58"
R = 1,088.00'
L = 350.61'
T = 176.84'
e = 0.060 Ft./Ft.

PLAN

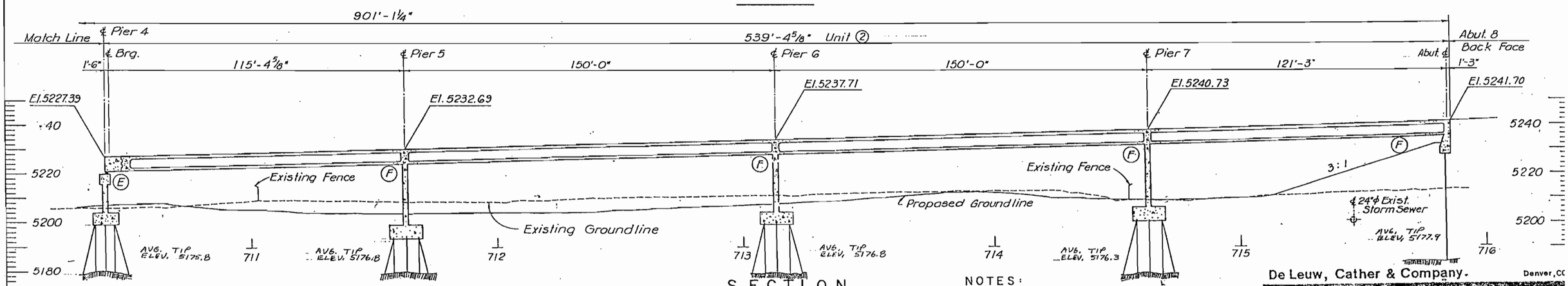

SECTION

Taken at Profile Grade Line Ramp F

NOTES:

1. For Adjacent Bridge Structure F-16-NK Unit ①, See Dwg. No. B-3
2. Temporary Side Slope Steeper than 3:1 as Required to Accommodate the Detour Ramp.

	INITIAL		CHECKED BY		
DESIGNED BY	M.M.	8-85		M.B.M.	9-85
CHECKED BY	R.K.	8-85	QUANTITIES BY	J.L.S.	11-85
DETAILED BY	V.V.	8-85	CHECKED BY	R.M.H.	

De Leuw, Cather & Company. Denver, CO

DIVISION OF HIGHWAYS

GENERAL LAYOUT
UNIT ②

Designer M. Merklinger		Structure Numbers	F-16-OE
Detailer V. Villoo			
Drawing Number B-4	of 50	Drawings	

Revision Dates (Preliminary Stage Only)

OF COLORADO
DEPARTMENT OF HIGHWAYS
ION OF HIGHWAYS:
H. FORM NO. 126:
FEB. 1984

AS CONSTRUCTED			
NO REVISIONS	REVISED 9/30/87	VOID	

FED.ROAD REGION	DIVISION	PROJ. NO.	SHEET NO.	SHEET TOTALS
VIII	COLO.	IR25-2(187)	96	~~159~~ 177

REVISIONS

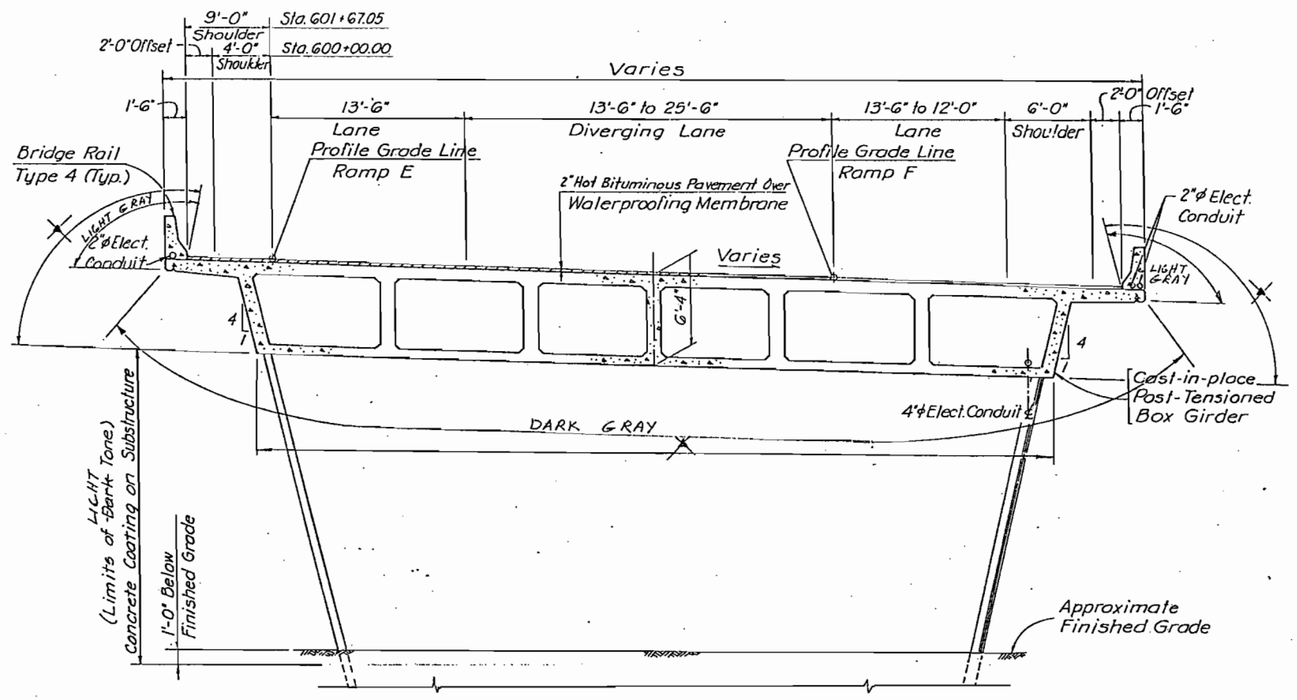

SECTION B-3 / A

▲ ~~Limits of Light Tone Concrete Coating on Superstructure and Bridge Rail~~

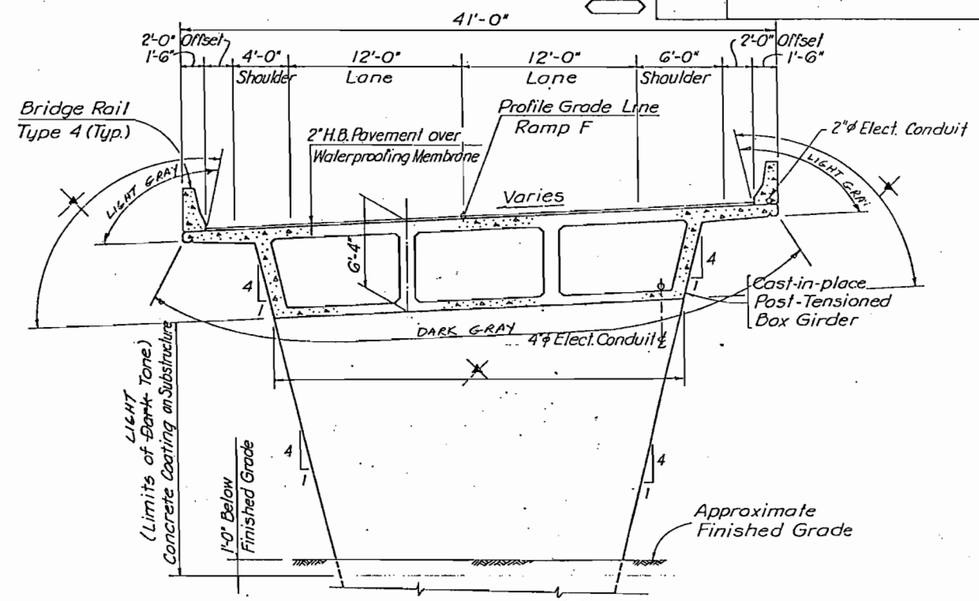

SECTION B-4 / C

▲ ~~Limits of Light Tone Concrete Coating on Superstructure and Bridge Rail~~

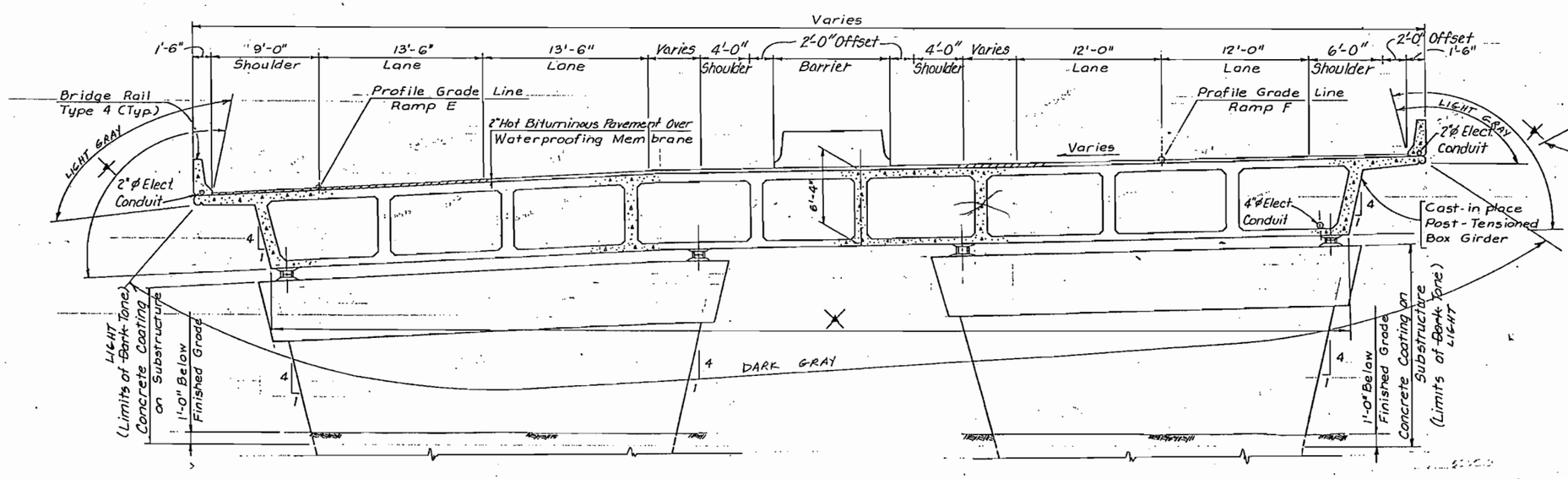

SECTION B-3 / B

▲ ~~Limits of Light Tone Concrete Coating on Superstructure Bridge Rail~~

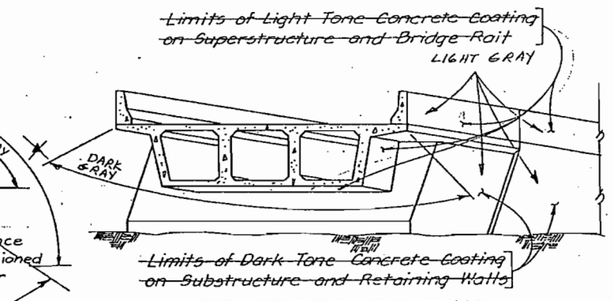

CONCRETE COATING LIMITS AT ABUTMENTS

De Leuw, Cather & Company Denver, CO.

DIVISION OF HIGHWAYS

GENERAL LAYOUT SECTIONS

Designer	M. Merklinger	Structure Numbers	F-16-NK
Detailer	V. Villoo		F-16-OE
Drawing Number	B-5 of 50 Drawings		

Revision Dates (Preliminary Stage Only)

	INITIAL	DATE
DESIGNED BY	M.R.M.	8-85
CHECKED BY	R.D.K.	8-85
DETAILED BY	V.V.V.	8-85
CHECKED BY	M.R.M.	9-85
QUANTITIES BY	J.L.S.	9-85
CHECKED BY	R.M.H.	11-85

AS CONSTRUCTED				
NO REVISIONS	REVISED 9/30/87	VOID		

FED. ROAD REG. NO	DIVISION	PROJECT NO.	SHEET NO.	TOTAL SHEETS
VIII	COLORADO	IR 25-2(187)	97	739

REVISIONS

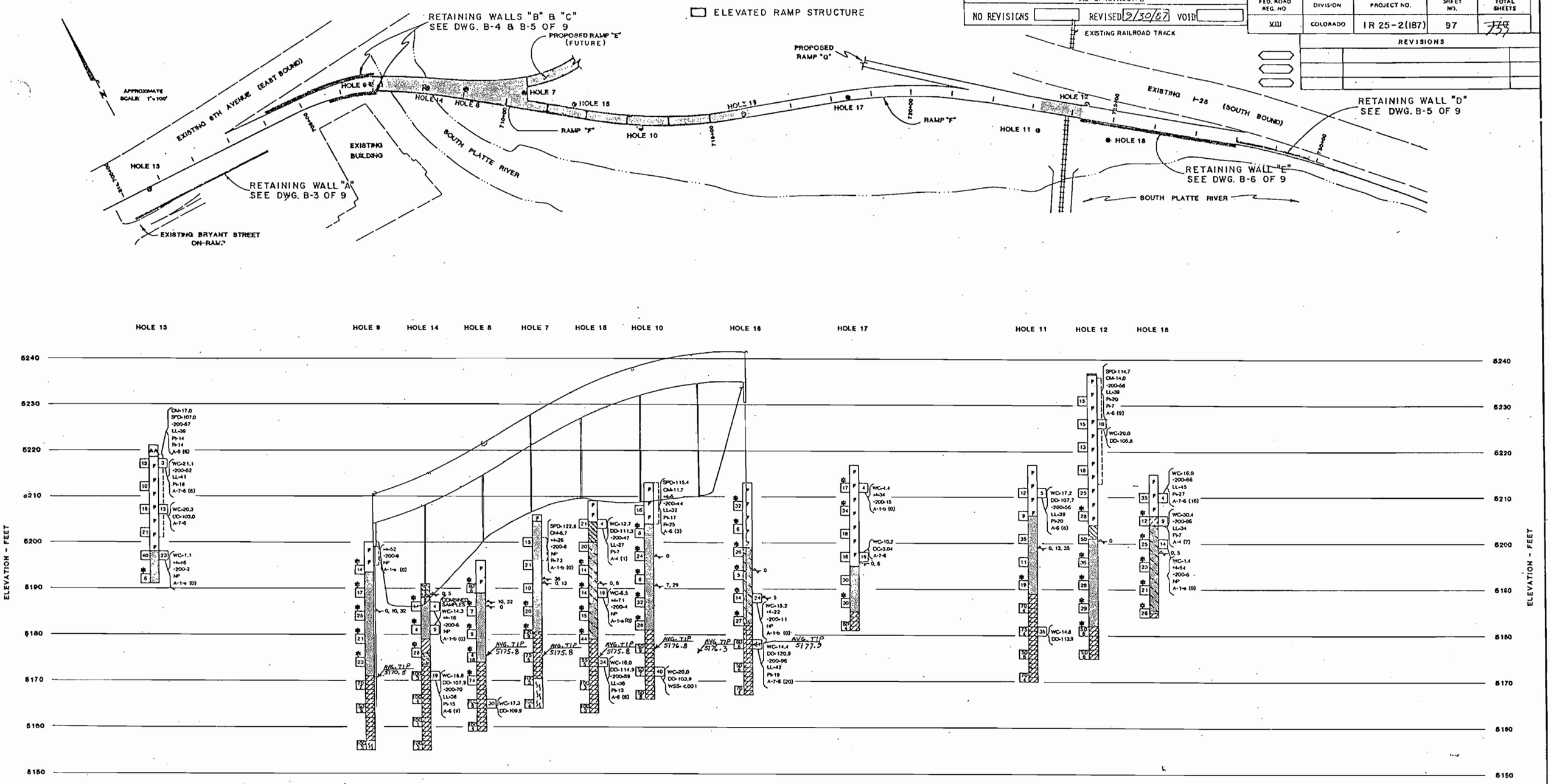

LEGEND:

- CONCRETE
- ASPHALT AND BASE COURSE
- FILL, SANDY CLAY TO CLAYEY SAND AND SILTY SAND, SCATTERED GRAVEL, UP TO 20% TRASH BY VOLUME IN HOLES 16 AND 17 CONSISTING OF CINDERS, BRICK, CONCRETE, WOOD, PAPER AND RAGS, SLIGHTLY MOIST TO MOIST, BROWN TO BLACK.
- CLAY (CL), SANDY, VERY STIFF, VERY MOIST TO WET, GRAY TO BROWN.
- SILT (ML), SLIGHTLY SANDY TO SANDY, STIFF, MOIST TO VERY MOIST, BROWN.
- SAND (SC), FINE TO COARSE GRAINED, CLAYEY TO VERY CLAYEY, DENSE, SLIGHTLY MOIST TO MOIST, BROWN.
- SAND (SM), FINE TO COARSE GRAINED, SILTY, SCATTERED GRAVEL, MEDIUM DENSE, WET, BROWN.
- SAND (SP-SM), FINE TO COARSE GRAINED, GRAVELLY, LOOSE TO DENSE, MOIST TO WET, BROWN.
- SAND (SP), FINE TO COARSE GRAINED, GRAVELLY, CLEAN TO SLIGHTLY SILTY, LOOSE TO DENSE, MOIST TO WET, BROWN.
- CLAYSTONE BEDROCK, SANDY TO VERY SANDY, MEDIUM HARD TO VERY HARD, SLIGHTLY MOIST TO VERY MOIST, BROWN TO GRAY-BLUE, BLOCKY, OCCASIONAL SANDSTONE LENSES.
- SANDSTONE BEDROCK, FINE TO MEDIUM GRAINED, VERY HARD, SLIGHTLY MOIST, BLUE, MODERATELY CEMENTED.

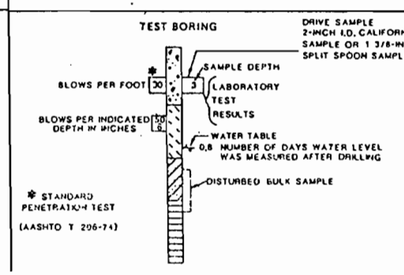

LABORATORY TEST RESULTS:

WC-WATER CONTENT (%)
DD-DRY DENSITY (pcf)
+4-PERCENTAGE RETAINED ON #4 SIEVE
-200-PERCENTAGE PASSING NO. 200 SIEVE
LL-LIQUID LIMIT (%)
PI-PLASTICITY INDEX (%)
NP-NON-PLASTIC
OC-ORGANIC CONTENT (%)
SPD-MAXIMUM STANDARD PROCTOR DENSITY (pcf)
OM-OPTIMUM MOISTURE CONTENT (%)
R-HVEEM STABILOMETER RESISTANCE VALUE
A-1-b (0)- AASHTO CLASSIFICATION AND GROUP INDEX.

● LOCATION OF EXPLORATORY BORING

EXPLORATORY HOLE	DATE OF DRILLING
7	3-8-85
8	3-11-85
9	3-11-85
10	3-14-85
11	3-8-85
12	3-14-85
13	7-18-85
14	7-19-85
15	7-18-85
16	7-19-85
17	7-18-85
18	7-19-85

STRUCTURE NO. F-16-NK & F-16-OE
DWG. NO. B 6 OF 50

DIVISION OF HIGHWAYS

ENGINEERING GEOLOGY

CHEN & ASSOCIATES, INC.

PROJECT NO. 1 801 84

Geologist
Drawn by A.S.
Checked by G.T.J.

PLATE I
Date AUG. 1985

BRIDGE HYDRAULIC INFORMATION

FEDERAL ROAD REGION NO.	DIVISION	PROJ. NO.	SHEET NO.	TOTAL SHEETS
VIII	COLORADO	IR25-2(187)	98	~~175~~ 222

AS CONSTRUCTED

NO REVISIONS 9/30/87 REVISED ____ VOID ____

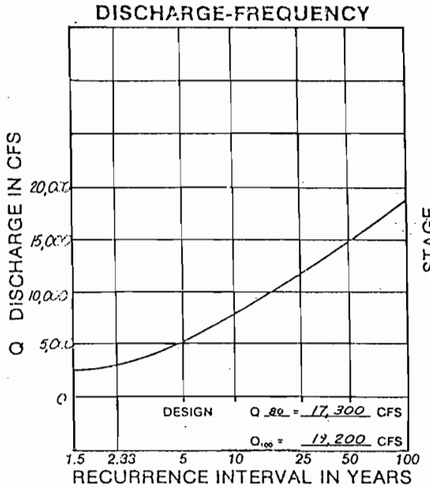

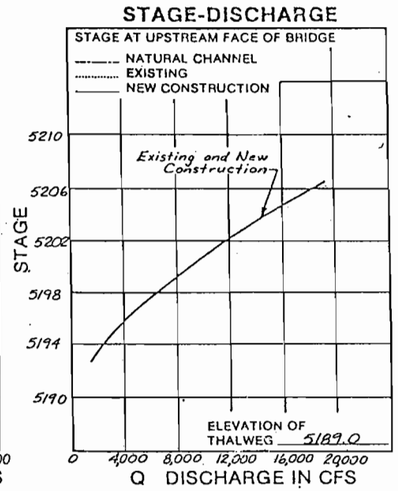

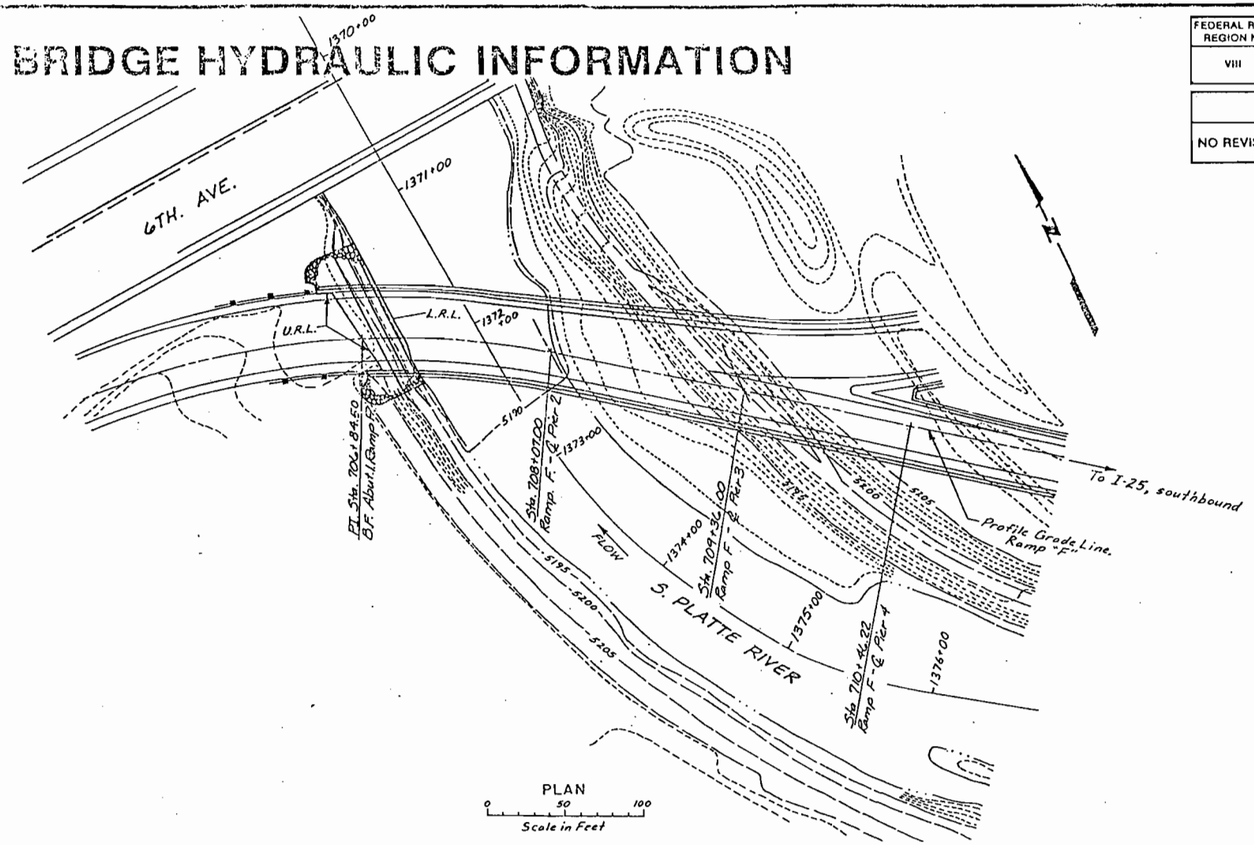

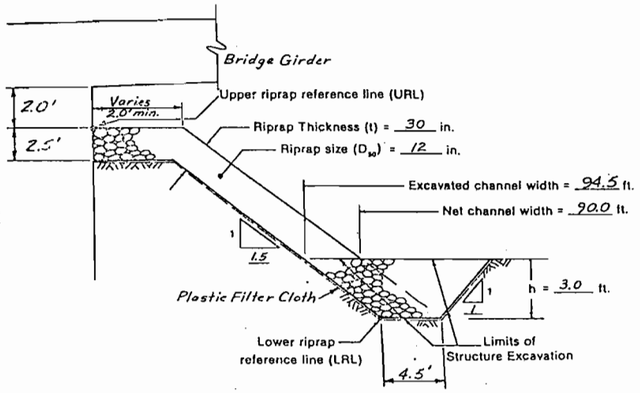

TYPICAL RIPRAP DETAIL, ABUT. 1

LEGEND

- Existing Contours
- Proposed Contours
- Revetment Protection

Drainage Area 3.395 Sq. Mi.

CHANNEL DESCRIPTION

Bottom Material — Cohesive ☐ Non Cohesive ■
Bottom Material Size — Clay ☐ Silt ☐ Sand ■ Gravel ■ Cobbles ■ Other _____
Stream Form — Straight ■ Meandering ☐ Braided ☐
Mannings "n" for Design — Channel 0.030 Overbank 0.040
Debris — Brush ■ Trees/Logs ■ Ice ■ Other _____

COMPARISON OF HYDRAULICS*

	Velocity	Freeboard	Max. Backwater
Natural Channel	— fps.	— ft.	— ft.
Existing	6.4 fps.	— ft.	— ft.
Proposed	7.1 fps.	3.0 ft. @ 1/3 span, Pier 3	0.3 ft.

*AT PROPOSED BRIDGE LOCATION DURING DESIGN DISCHARGE

COMMENTS

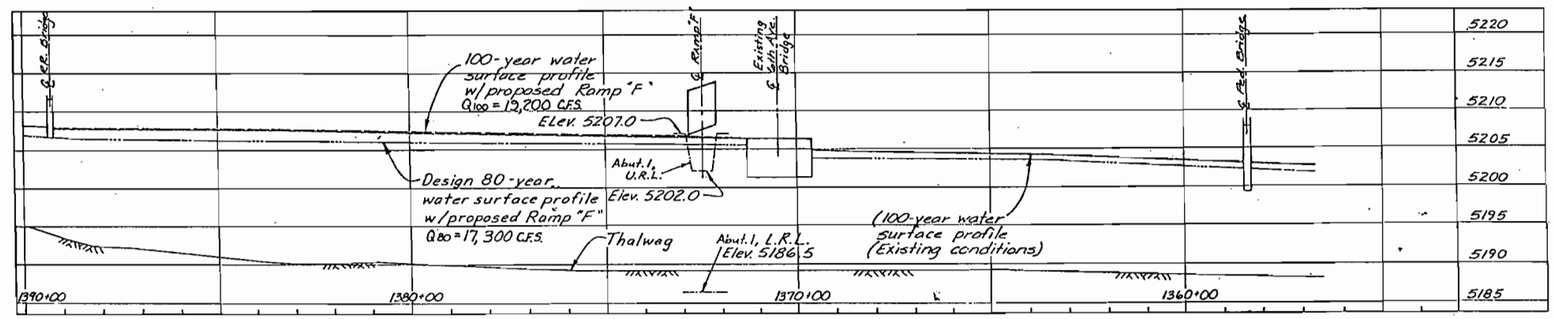

PROFILE of WATER SURFACE & RIPRAP REFERENCE LINES

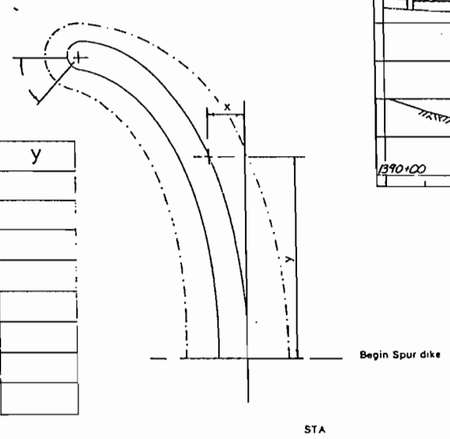

x	y

TYPICAL SPUR DIKE DETAIL

DIVISION OF HIGHWAYS

6TH. AVE. & I-25 INTERCHANGE - RAMP F

BRIDGE HYDRAULIC INFORMATION

Across South Platte River	Approved By [signature] Date: 2/4/86
Designer E. Rios	Structure Numbers F-16-NK F-16-OE
Detailer J.M., M.W.	
Drawing Number B-7	of 50 Drawings

Revision Dates (Preliminary Stage Only)

COLORADO
DEPARTMENT OF HIGHWAYS
DIVISION OF HIGHWAYS
FORM NO. 126
1984

WEB	RADIUS	ARC LENGTH	TANGENT LENGTH
W1	543.25'	L= 341.37'	T=176.53'
W2	533.25'	L=335.09'	T=173.28'
W3	523.25'	L=328.02'	T=170.03'
W8	516.25'	L=324.72'	T=167.92'
W9	506.75'	L=318.43	T=164.67'
W10	496.75'	L=312.15'	T=161.42

NOTE: Dimensions Shown Are Curve Lengths From P.C. Sta. 704+95.33 To P.T. Sta. 708+18.48 Along Web ℄.

AS CONSTRUCTED		
NO REVISIONS	REVISED 9/30/97	VOID

FED. ROAD REGION	DIVISION	PROJ. NO.	SHEET NO.	SHEET TOTALS
VIII	COLO.	IR25-2(187)	99	~~170~~ 172

REVISIONS		

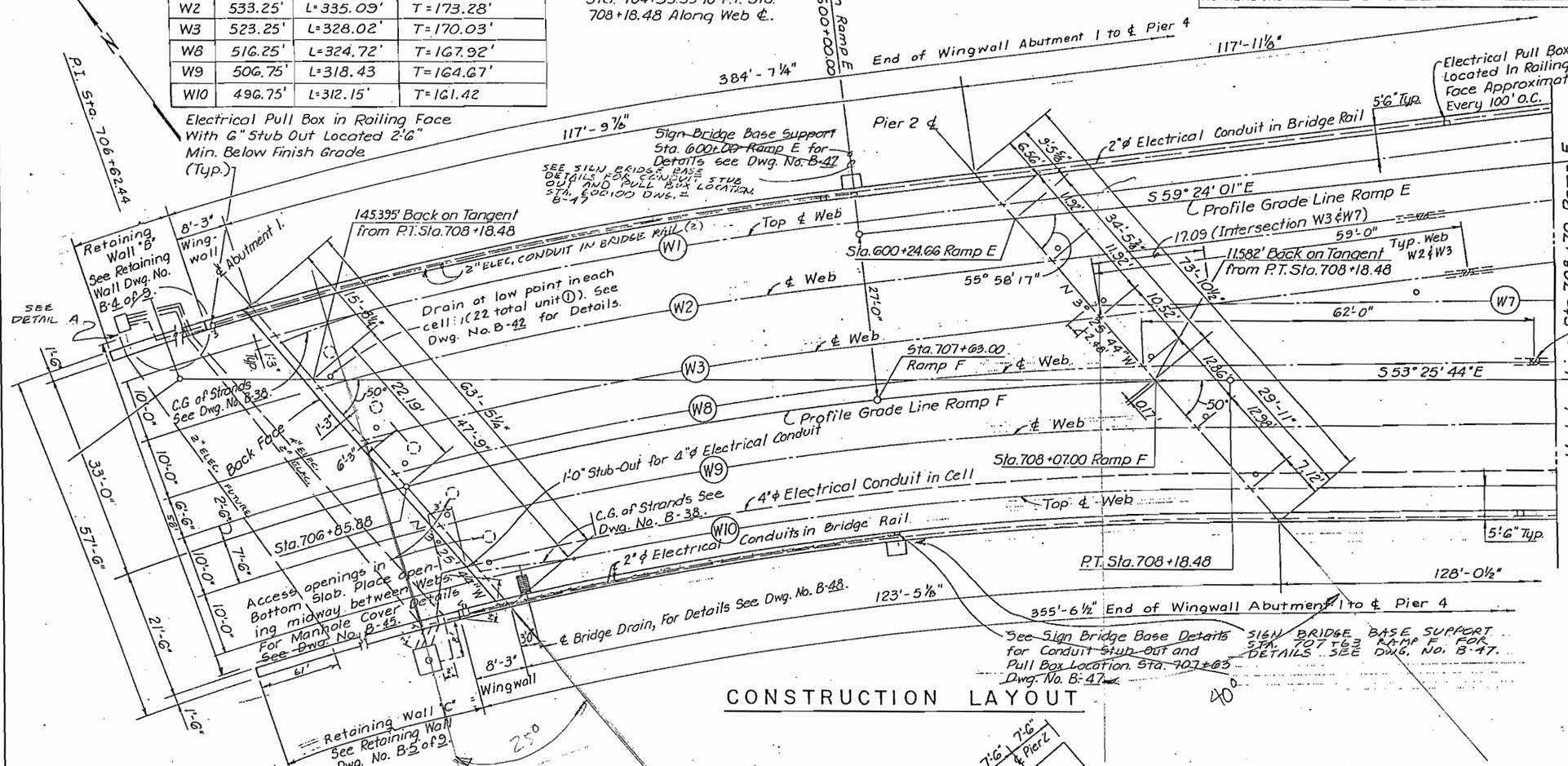

CONSTRUCTION LAYOUT

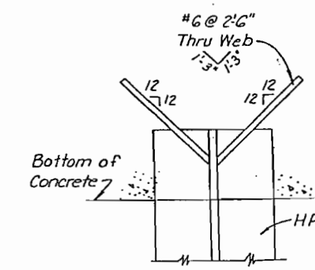

TYPICAL PILING ANCHORAGE
(Abutment 1 Only)

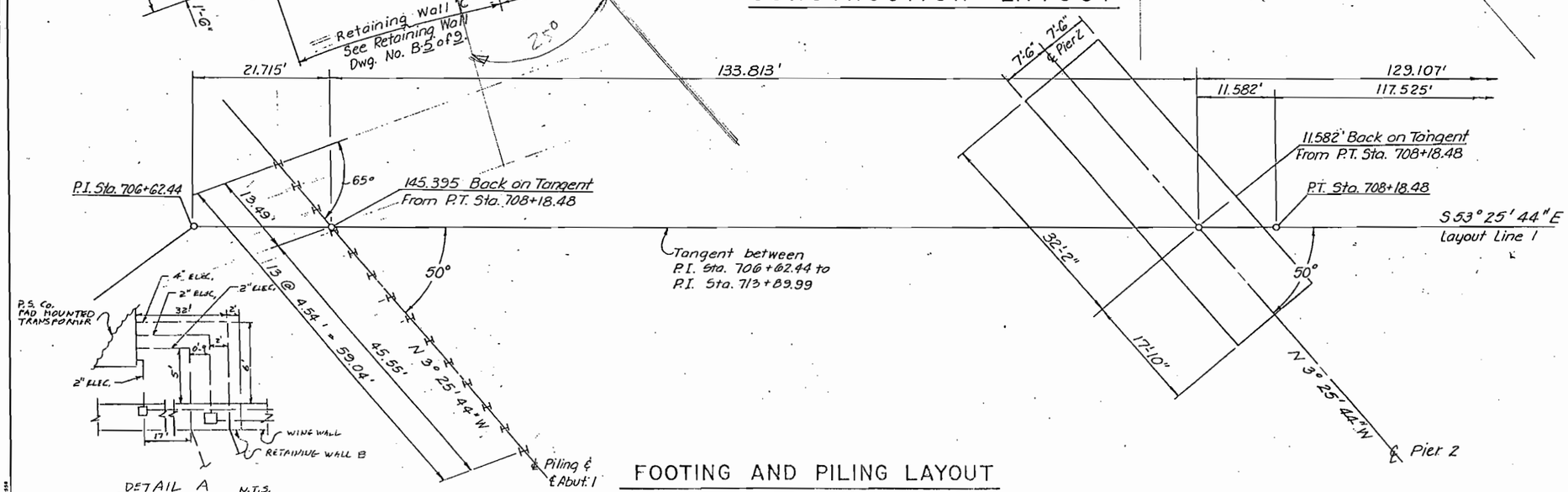

FOOTING AND PILING LAYOUT

NOTES:

1. Dimensions Are At Bottom of Concrete
2. Pile Data:

Location	Pile Size	Est. Tip Elev.	Max Pile Load
Abut. 1	HP 12×53	5164.0	70 Tons

3. All Piles Shall Be End Bearing
4. All Piling at Abut. 1 Shall Be Placed in 18" Dia. Drilled Holes 10 Feet Deep. Fill Holes With Bentonite Slurry Before Piling is Driven. (To Be Included In The Work). See Dwg. No B-13.
5. Pier 2 Footing Pressure = 6.75 Tons Per Square Foot

De Leuw, Cather & Company — Denver, CO.

DIVISION OF HIGHWAYS

CONSTRUCTION LAYOUT
FOOTING AND PILING LAYOUT

Designer J. Stapleton	Structure Numbers	F-16-NK	
Detailer Villao, Ponnina			
Drawing Number B-8	of 50	Drawings	

Revision Dates			(Preliminary Stage Only)			

	INITIAL	DAT		
DESIGNED BY	JLS	9-8	CHECKED BY	J.L.S. 10-85
CHECKED BY	MRM	11-85	QUANTITIES BY	RMH 10-85
DETAILED BY	VVS	9-85	CHECKED BY	

WEB	RADIUS	ARC LENGTH	TANGENT LENGTH
W1	395.00'	L = 505.51'	T = 294.02'
W2	405.00'	L = 518.31'	T = 301.47'
W3	415.00'	L = 531.10'	T = 308.91'
W4	425.00'	L = 543.90'	T = 316.35'
W5	435.00	L = 556.70'	T = 323.80'

NOTE: Dimensions Shown Are Curve Lengths From P.C. Sta. 601+67.05 To P.C.C. Sta. 606+78.96 Along Web ℄

AS CONSTRUCTED			
NO REVISIONS 9/30/87	REVISED	VOID	

FED. ROAD REGION	DIVISION	PROJ. NO.	SHEET NO.	SHEET TOTALS
VIII	COLO.	IR25-2(187)	100	~~170~~ 177

REVISIONS

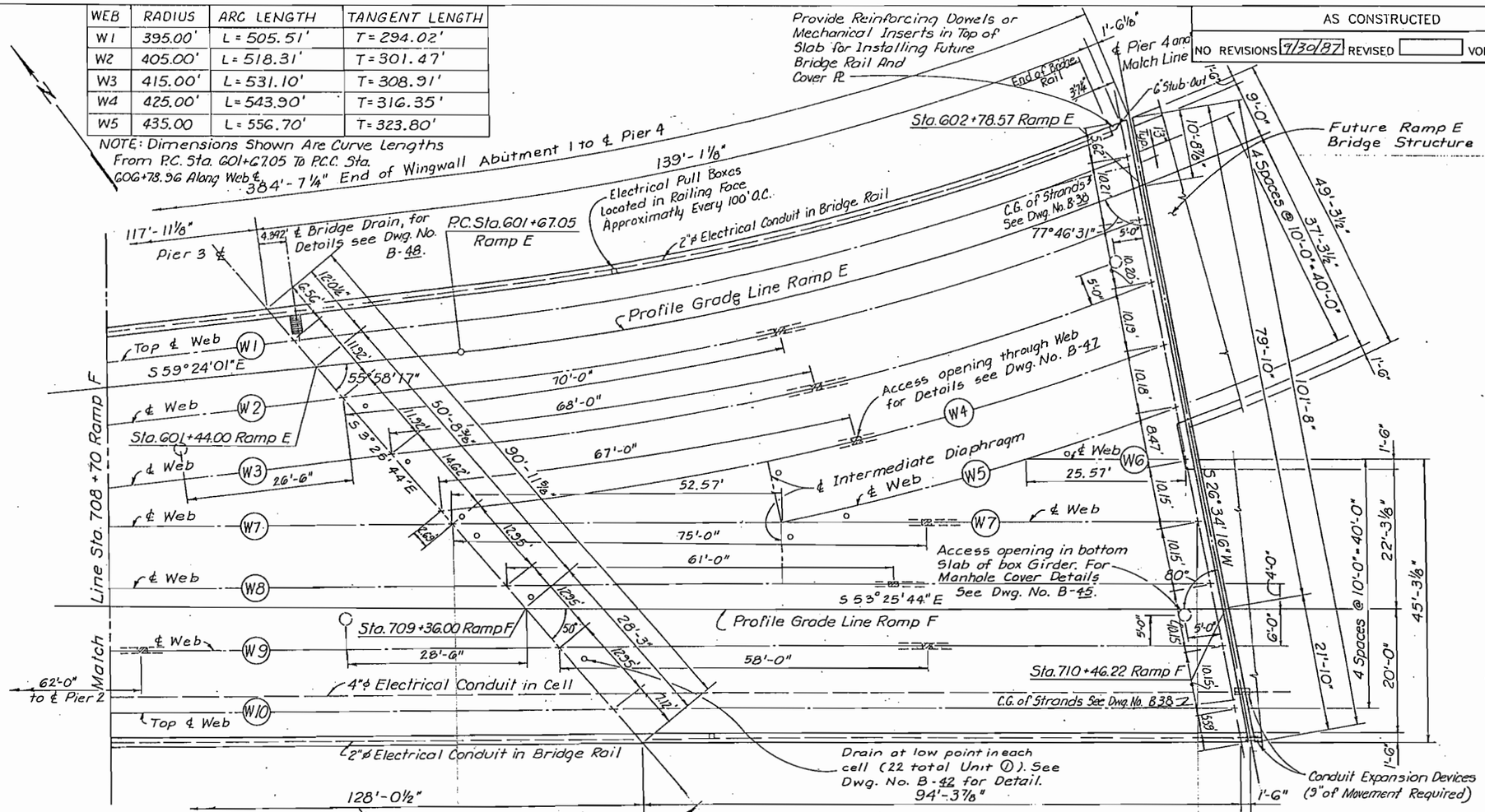

CONSTRUCTION LAYOUT

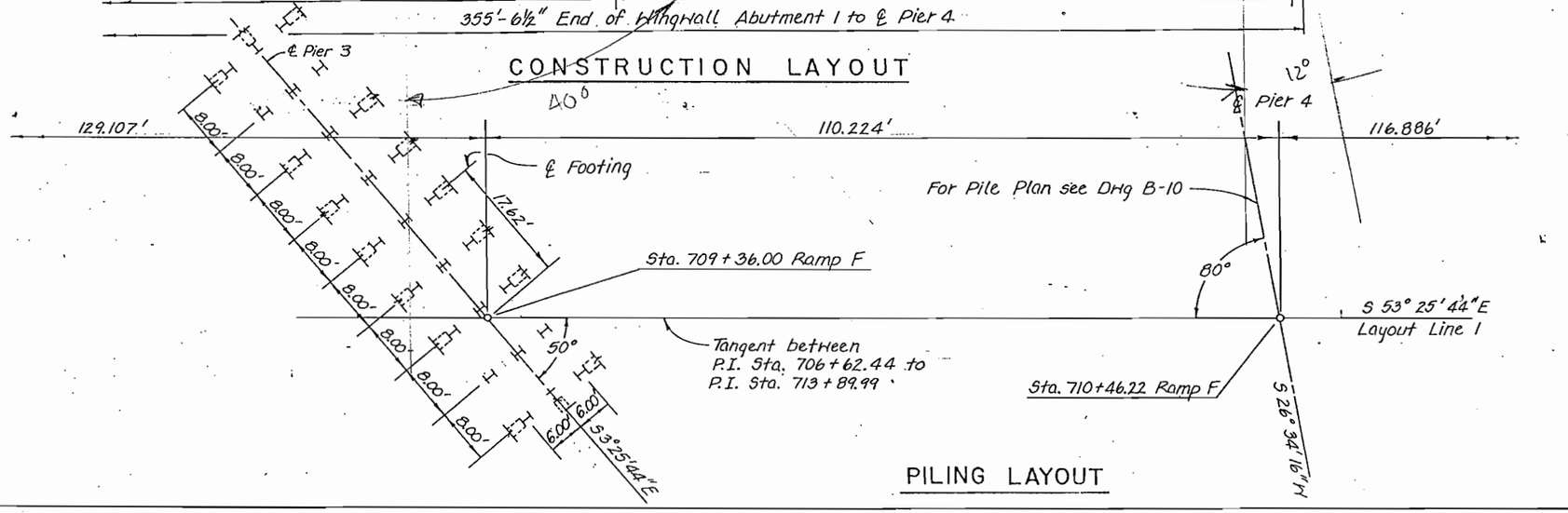

PILING LAYOUT

1. Dimensions are at bottom of concrete.
2. Pile Data:

Location	Pile Size	Est. Tip Elev.	Max. Pile Load
Pier 3	HP 14x102	5167.0	125 Tons

3. All piles shall be end bearing.
4. Piles shown thus (⊢⊣) are to be battered at 3:12 in the direction shown.

De Leuw, Cather & Company — Denver, CO.

DIVISION OF HIGHWAYS

CONSTRUCTION LAYOUT
PILING LAYOUT

Designer J. Stapleton	Structure Numbers	F-16-NK	
Detailer Villao, Panning			
Drawing Number B-9	of 50	Drawings	

Revision Dates (Preliminary Stage Only)

DESIGNED BY	CHECKED BY	QUANTITIES BY	CHECKED BY	DETAILED BY
JLS	9-85	R.M.H.	11-85	

COLORADO
DEPARTMENT OF HIGHWAYS
DIVISION OF HIGHWAYS:
FORM NO. 126:
1984

REVISIONS		

AS CONSTRUCTED

NO REVISIONS ☐ REVISED 9/30/87 VOID ☐

FED. ROAD REGION	DIVISION	PROJ. NO.	SHEET NO.	SHEET TOTALS
VIII	COLO.	IR25-2(187)	101	~~170~~ 177

WEB	TENDON CURVE	
W1	L=20'	R=400'
W2	L=20'	R=600'
W3	L=20'	R=1200'
W4	Straight	

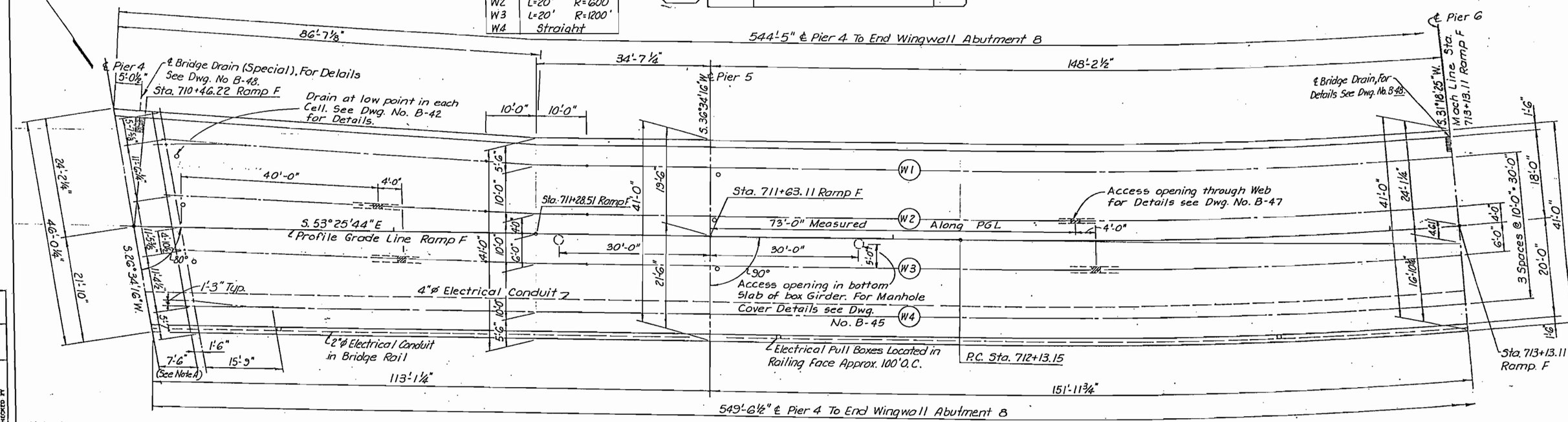

Note A
This Section Is Cast-In-Place After All Post-Tensioning And Grouting Are Completed.

CONSTRUCTION LAYOUT

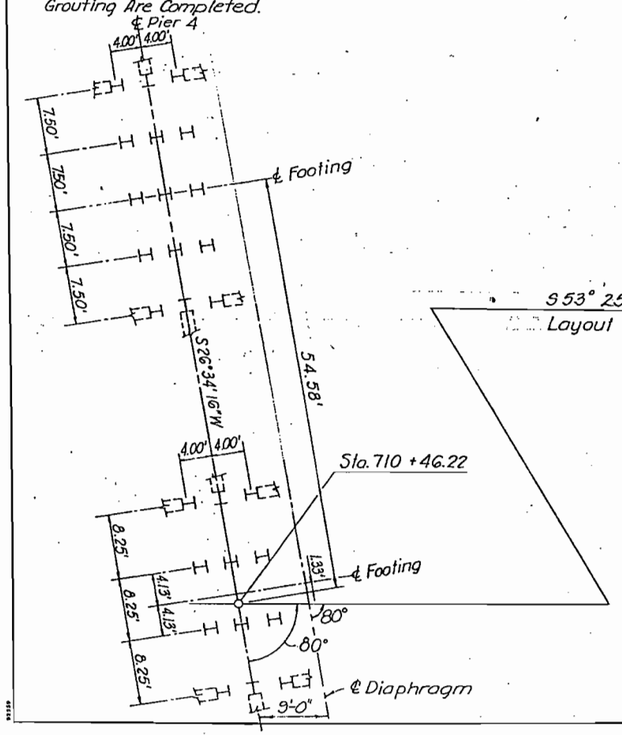

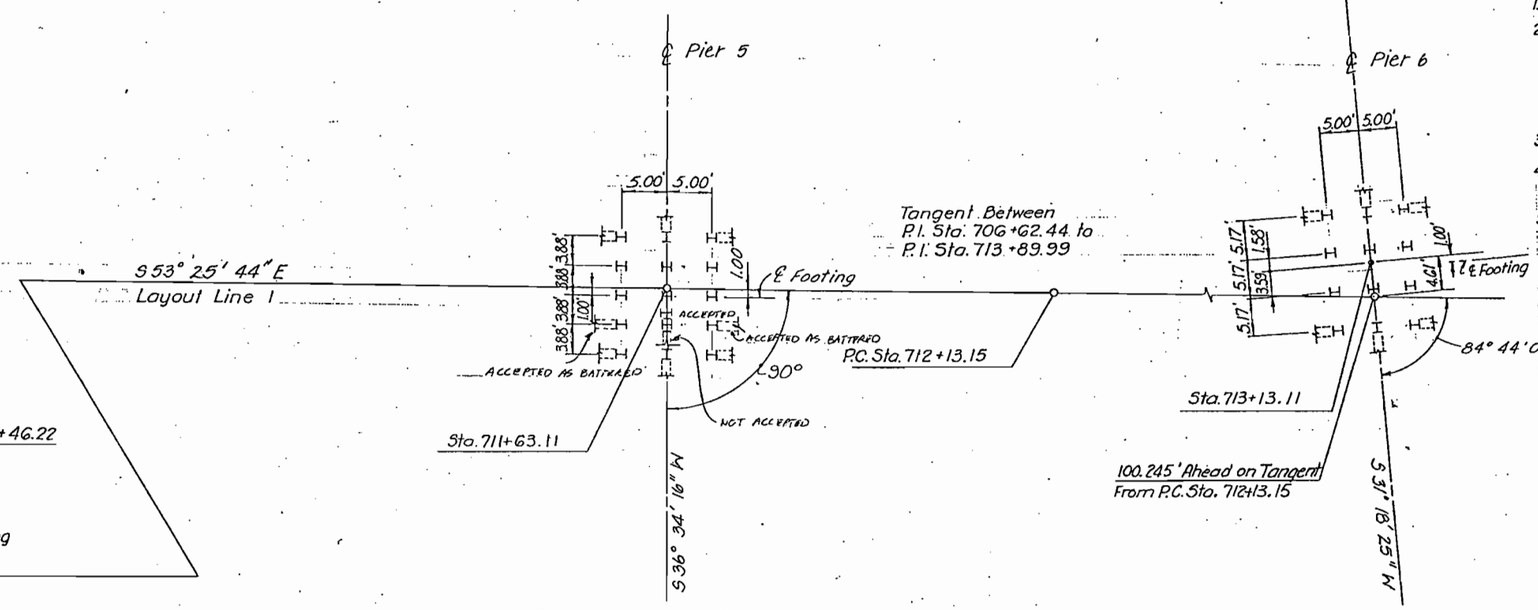

PILING LAYOUT

NOTES:

1. Dimensions are at Bottom of Concrete.
2. Pile Data:

Location	Pile Size	Est. Tip Elev.	Max. Pile Load
Pier 4	HP14x102	5173.00	125 Tons
Pier 5	HP14x102	5172.00	110 Tons
Pier 6	HP14x102	5174.00	130 Tons

3. All Piles shall be End Bearing
4. Piles shown thus (H-[-]) are to be battered at 3:12 in the Direction Shown.
5. Temporary Support is Required At ℄ Diaphragm Near Pier 4. See Dwg. No. B-31 For Details.

De Leuw, Cather & Company — Denver, CO.

DIVISION OF HIGHWAYS

CONSTRUCTION LAYOUT
PILING LAYOUT

Designer M. Merklinger	Structure Numbers	F-16-NK	
Detailer R. Hinshaw		F-16-OE	
Drawing Number B-10	of 50	Drawings	

Revision Dates (Preliminary Stage Only)

DESIGNED BY	M.R.M.	10-85	CHECKED BY	M.R.M.	10-85
CHECKED BY	J.L.S.		QUANTITIES BY	R.M.H.	10-85
DETAILED BY	RMH	9-85	CHECKED BY		

OF COLORADO
DEPARTMENT OF HIGHWAYS
ON OF HIGHWAYS:
H. FORM NO. 126:
EB. 1984

REVISIONS		

AS CONSTRUCTED
NO REVISIONS 9/30/97 REVISED ____ VOID ____

FED. ROAD REGION	DIVISION	PROJ. NO.	SHEET NO.	SHEET TOTALS
VIII	COLO.	IR25-2(187)	102	77

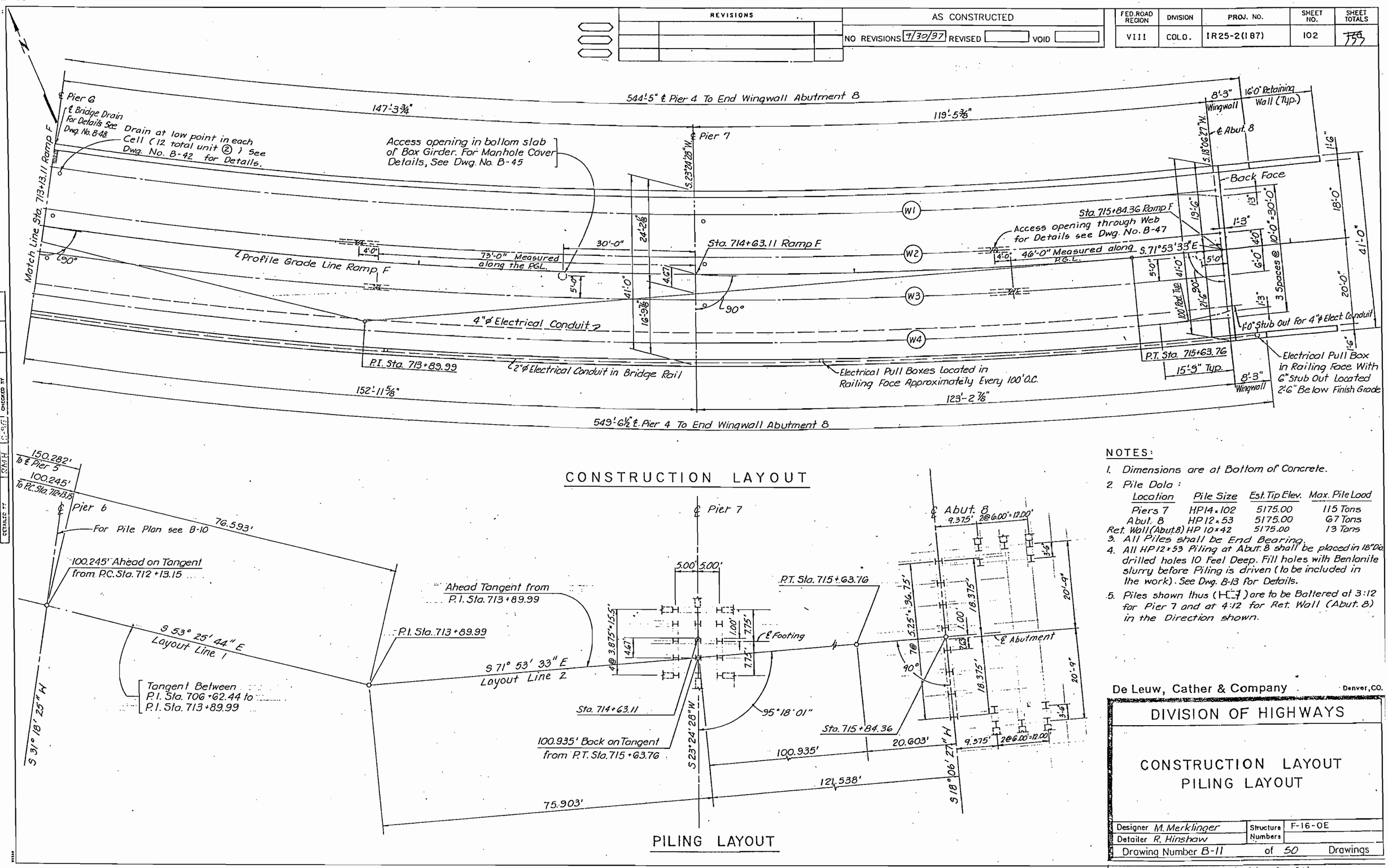

NOTES:

1. Dimensions are at Bottom of Concrete.
2. Pile Data:

Location	Pile Size	Est. Tip Elev.	Max. Pile Load
Piers 7	HP14×102	5175.00	115 Tons
Abut. 8	HP12×53	5175.00	67 Tons
Ret. Wall (Abut. 8)	HP 10×42	5175.00	13 Tons

3. All Piles shall be End Bearing.
4. All HP12×53 Piling at Abut. 8 shall be placed in 18" Dia. drilled holes 10 Feet Deep. Fill holes with Bentonite slurry before Piling is driven (to be included in the work). See Dwg. B-13 for Details.
5. Piles shown thus (⊢⊣) are to be Battered at 3:12 for Pier 7 and at 4:12 for Ret. Wall (Abut. 8) in the Direction shown.

INITIAL	DATE	
M.R.M.	10-85	
R.M.H.	10-85	
DESIGNED BY	CHECKED BY	
M.R.M.	9-85	
CHECKED BY	QUANTITIES BY	
R.M.H.	10-85	
DETAILED BY	CHECKED BY	

De Leuw, Cather & Company Denver, CO.

DIVISION OF HIGHWAYS

CONSTRUCTION LAYOUT
PILING LAYOUT

Designer M. Merklinger
Detailer R. Hinshaw
Structure Numbers F-16-OE
Drawing Number B-11 of 50 Drawings

Revision Dates (Preliminary Stage Only)

OF COLORADO
DEPARTMENT OF HIGHWAYS
ION OF HIGHWAYS:
H. FORM NO. 126:
FEB. 1984

REVISIONS		

AS CONSTRUCTED

NO REVISIONS ☐ REVISED 9/30/87 VOID ☐

FED. ROAD REGION	DIVISION	PROJ. NO.	SHEET NO.	SHEET TOTALS
VIII	COLO.	IR25-2(187)	103	~~170~~ 177

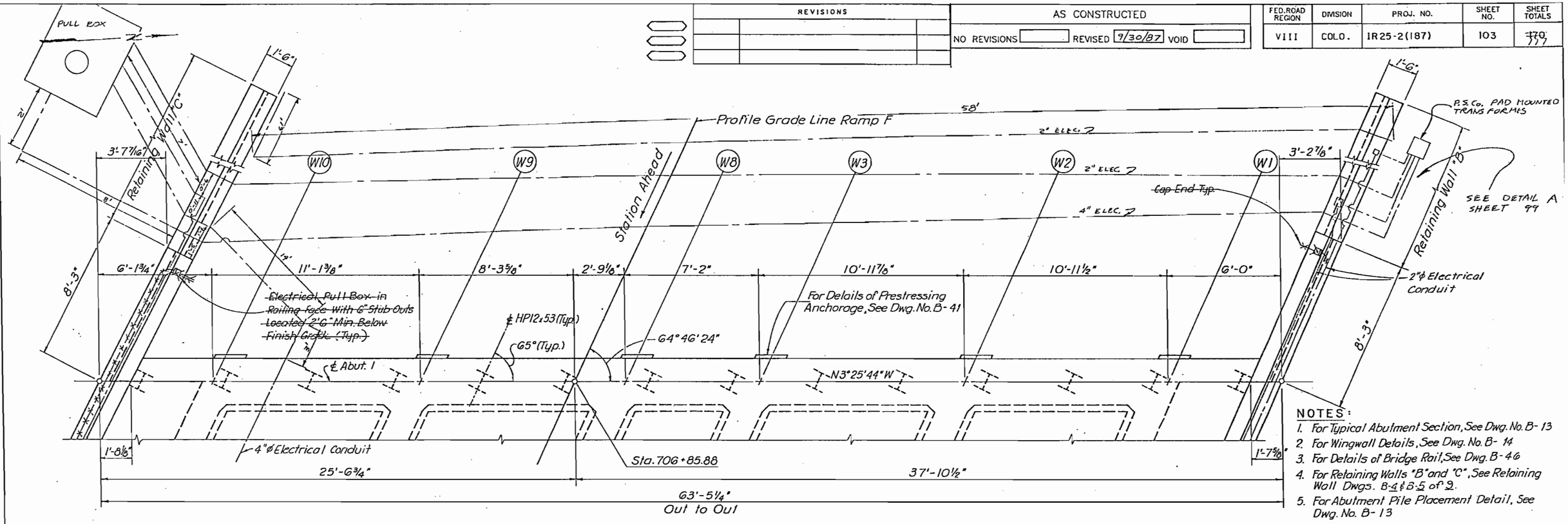

PLAN

NOTES:

1. For Typical Abutment Section, See Dwg. No. B-13
2. For Wingwall Details, See Dwg. No. B-14
3. For Details of Bridge Rail, See Dwg. B-46
4. For Retaining Walls "B" and "C", See Retaining Wall Dwgs. B-4 & B-5 of 9.
5. For Abutment Pile Placement Detail, See Dwg. No. B-13

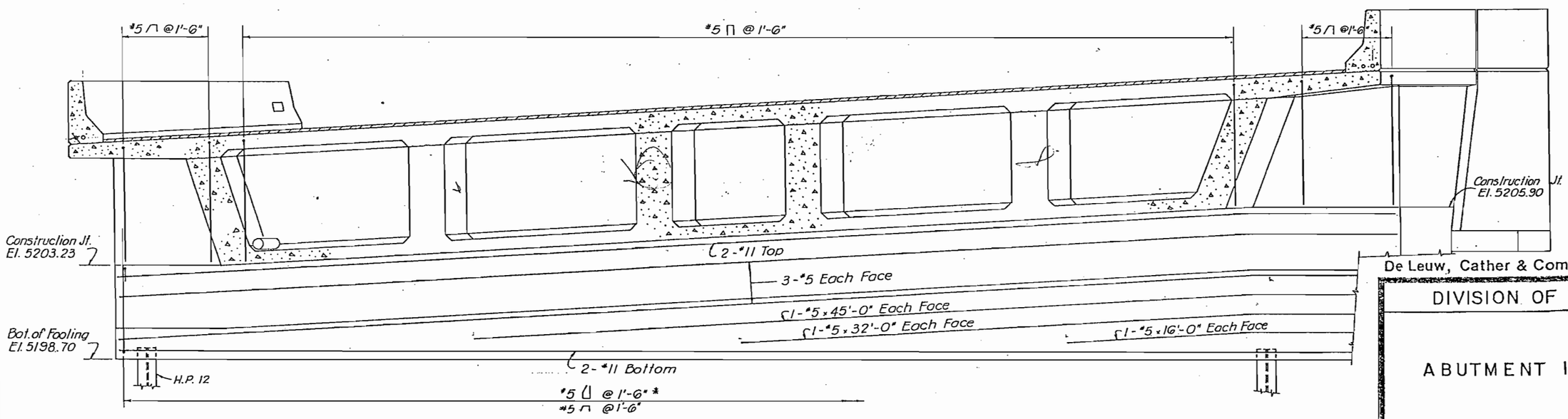

ELEVATION

* Adjust Reinforcement to clear piles.

	INITIAL	DATE	CHECKED BY	J.L.S.	9-85
DESIGNED BY	J.L.S.	9-85	QUANTITIES BY	R.M.H.	11-85
CHECKED BY					
DETAILED BY	V.V.V.	9-85	CHECKED BY		

De Leuw, Cather & Company Denver, CO

DIVISION OF HIGHWAYS

ABUTMENT I DETAILS

Designer J. Stapleton		Structure Numbers	F-16-NK
Detailer V. Villao			
Drawing Number B-12	of 50	Drawings	

Revision Dates (Preliminary Stage Only)

OF COLORADO
DEPARTMENT OF HIGHWAYS
ON OF HIGHWAYS:
4, FORM NO. 126:
EB. 1984

AS CONSTRUCTED			
NO REVISIONS		REVISED 9/30/87	VOID
REVISIONS			

FED. ROAD REGION	DIVISION	PROJ. NO.	SHEET NO.	SHEET TOTALS
VIII	COLO.	IR25-2(187)	104	170/177

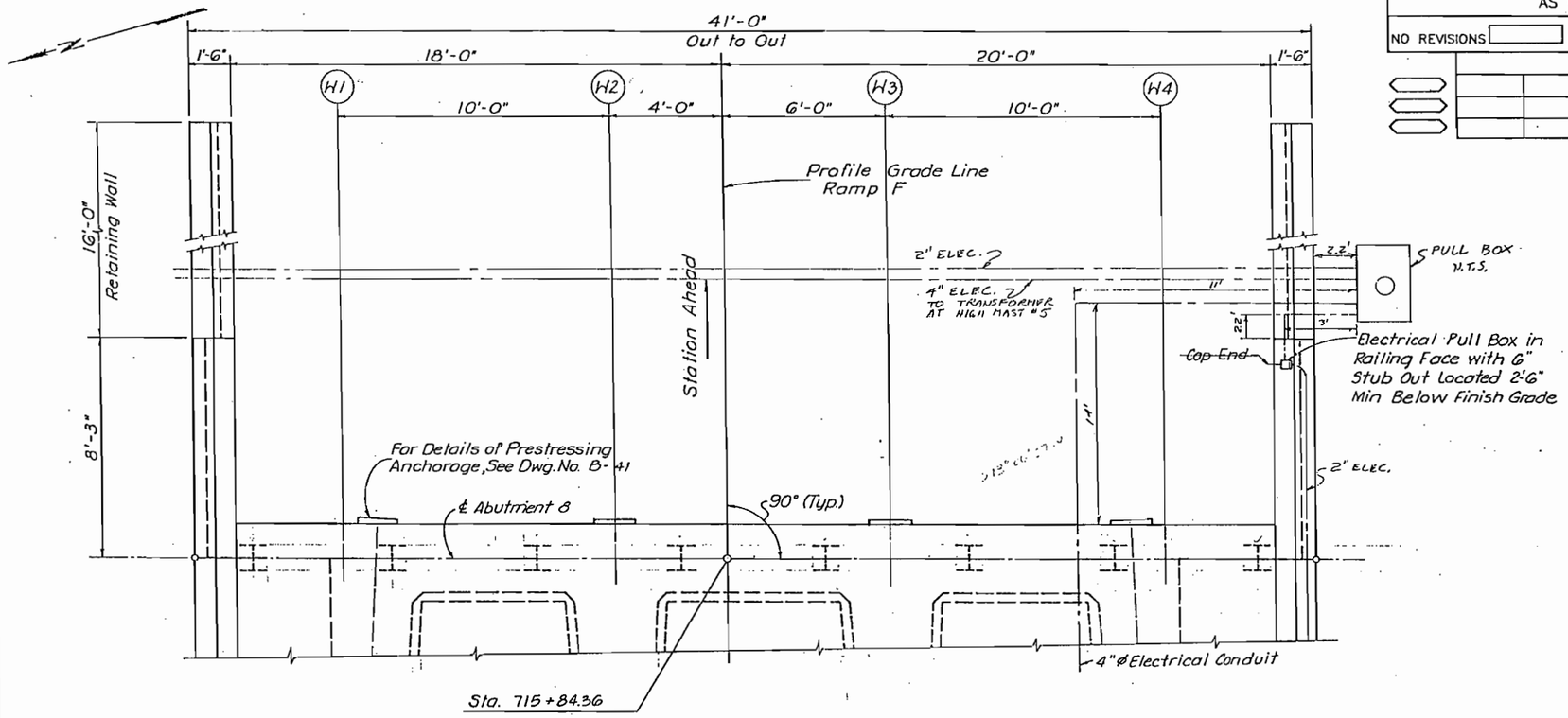

PLAN

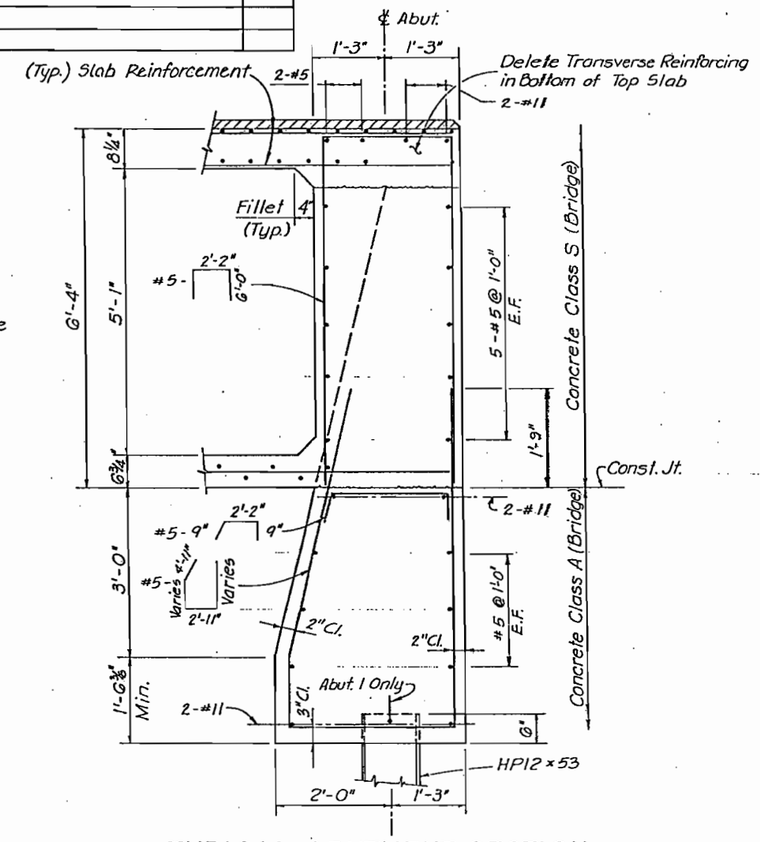

TYPICAL ABUTMENT SECTION

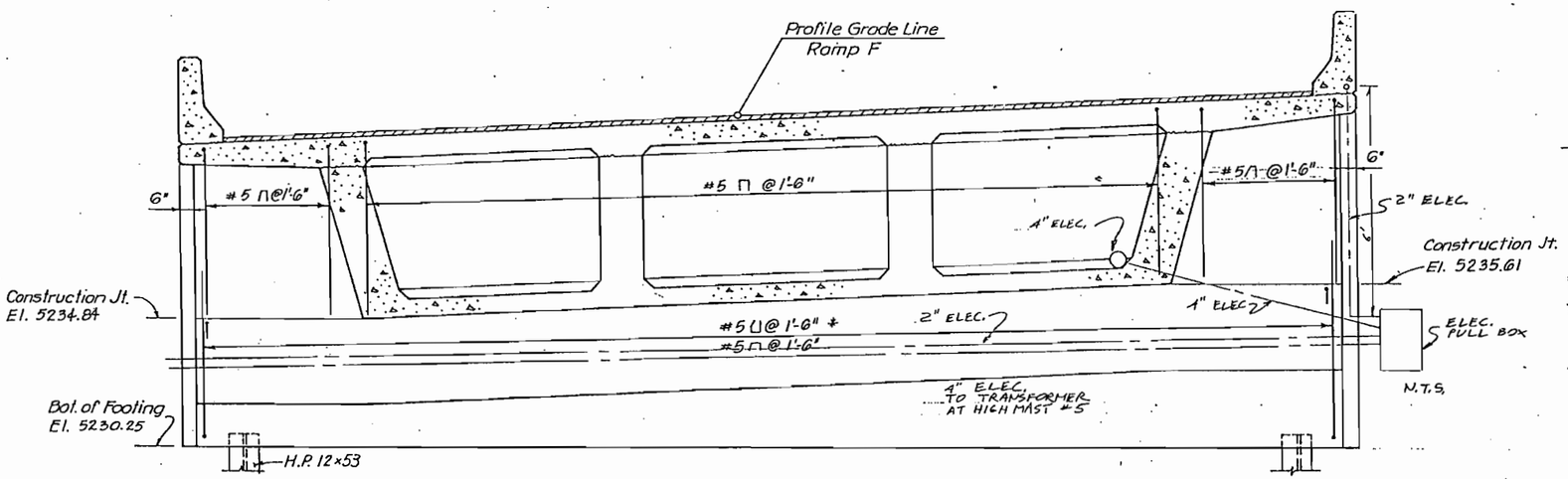

ELEVATION

* Adjust Reinforcement to clear piles.

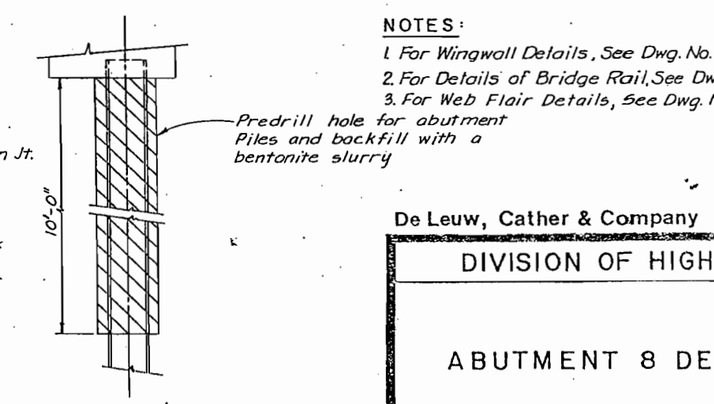

ABUTMENT PILE PLACEMENT DETAIL

NOTES:

1. For Wingwall Details, See Dwg. No. B-15
2. For Details of Bridge Rail, See Dwg. No. B-43
3. For Web Flair Details, See Dwg. No. B-39

DESIGNED BY	J.L.S.	9-85	
CHECKED BY	R.D.K.	11-85	
DETAILED BY	V.V.V.	8-85	
CHECKED BY	R.M.H.	11-85	
QUANTITIES BY			
INITIAL	J.L.S.	8-85	

De Leuw, Cather & Company Denver, CO.

DIVISION OF HIGHWAYS

ABUTMENT 8 DETAILS

Designer	J. Stapleton	Structure Numbers	F-16-NK
Detailer	V. Villao		F-16-OE
Drawing Number	B-13	of 50	Drawings

Revision Dates (Preliminary Stage Only)

OF COLORADO
DEPARTMENT OF HIGHWAYS
ION OF HIGHWAYS:
H. FORM NO. 170:
FEB. 1984

AS CONSTRUCTED			
NO REVISIONS 9/30/87	REVISED		VOID

FED. ROAD REGION	DIVISION	PROJ. NO.	SHEET NO.	SHEET TOTALS
VIII	COLO.	IR25-2(187)	105	~~170~~ 177

REVISIONS		

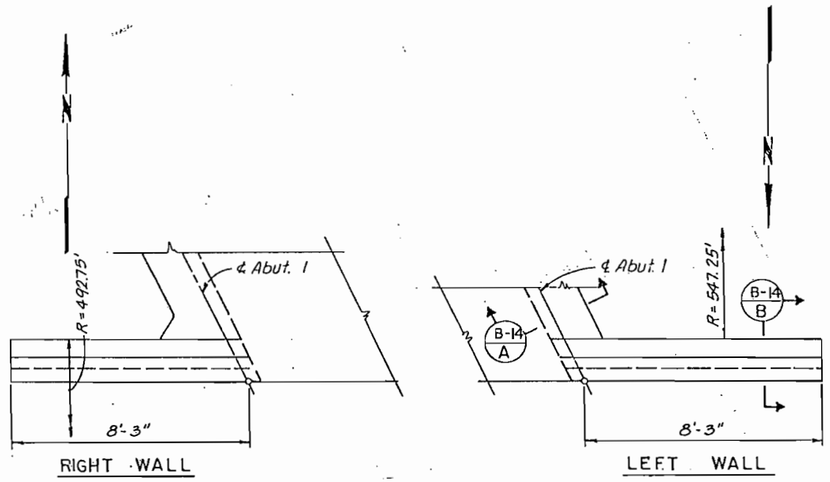

PLAN

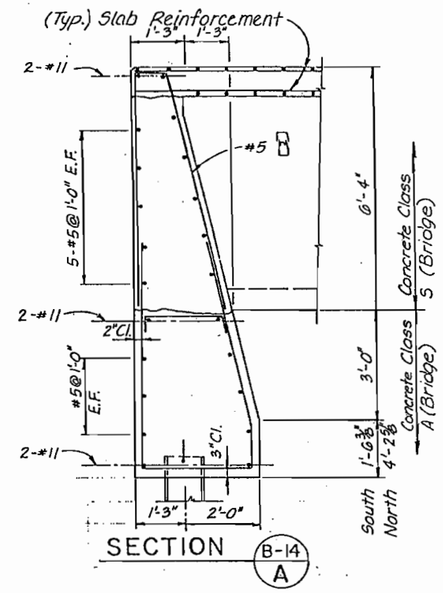

SECTION B-14 A

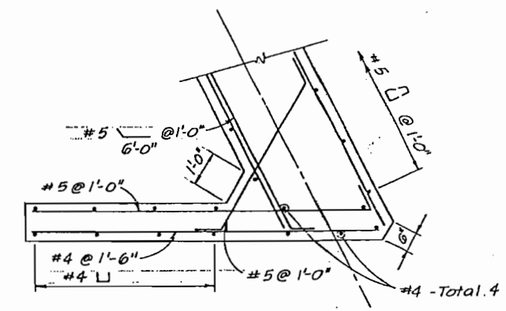

SECTION B-14 C

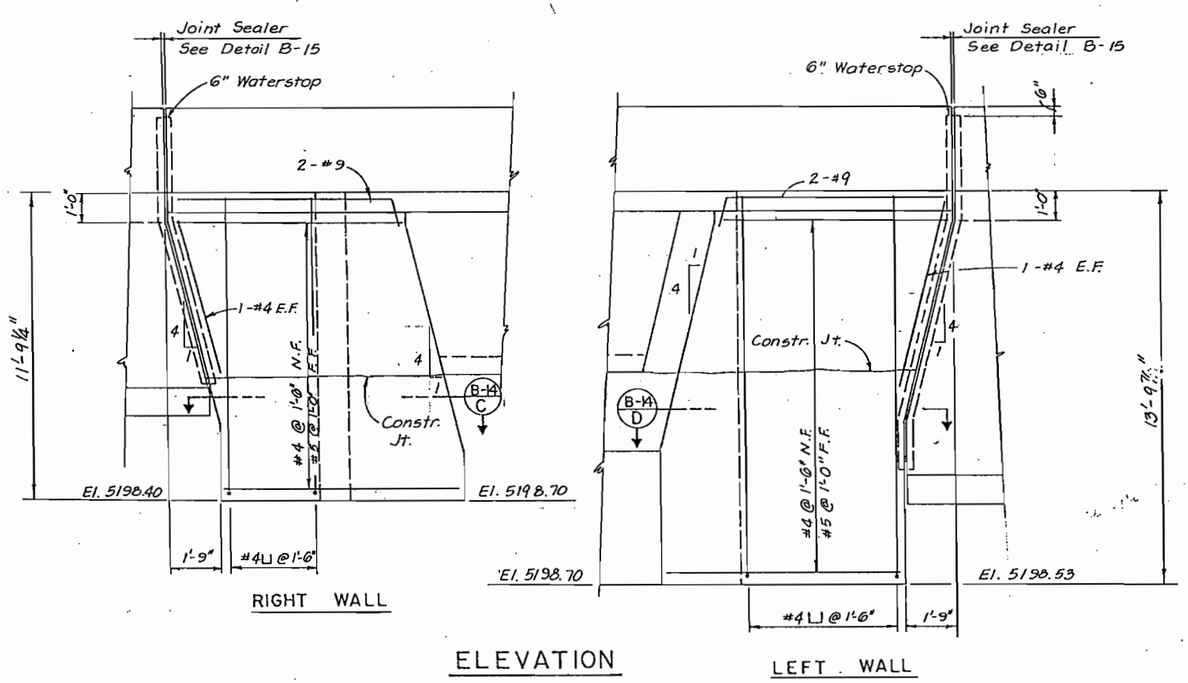

ELEVATION

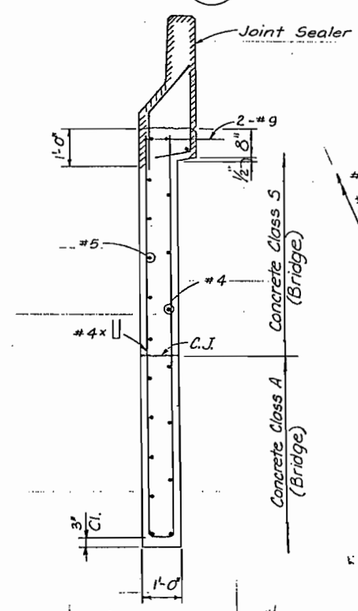

SECTION B-14 B

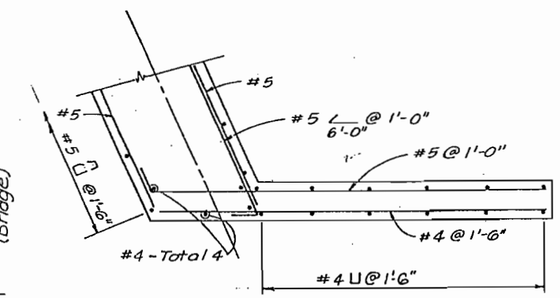

SECTION B-14 D

INITIAL	DATE		
DESIGNED BY J.L.S.	9-85	CHECKED BY J.L.S.	9-85
CHECKED BY R.S.P.	9-85	QUANTITIES BY R.M.H.	11-85
DETAILED BY R.S.P.	9-85	CHECKED BY	

De Leuw, Cather & Company — Denver, CO.

DIVISION OF HIGHWAYS

WINGWALL DETAILS

Designer J. Stapleton		Structure Numbers	F-16-NK
Detailer R. Panning			
Drawing Number B-14	of 50	Drawings	

Revision Dates (Preliminary Stage Only)

OF COLORADO
DEPARTMENT OF HIGHWAYS
ION OF HIGHWAYS:
H. FORM NO. 126:
FEB. 1984

AS CONSTRUCTED				
NO REVISIONS 9/30/87	REVISED		VOID	

FED. ROAD REGION	DIVISION	PROJ. NO.	SHEET NO.	SHEET TOTALS
VIII	COLO.	IR25-2(187)	106	~~170~~ 177

REVISIONS

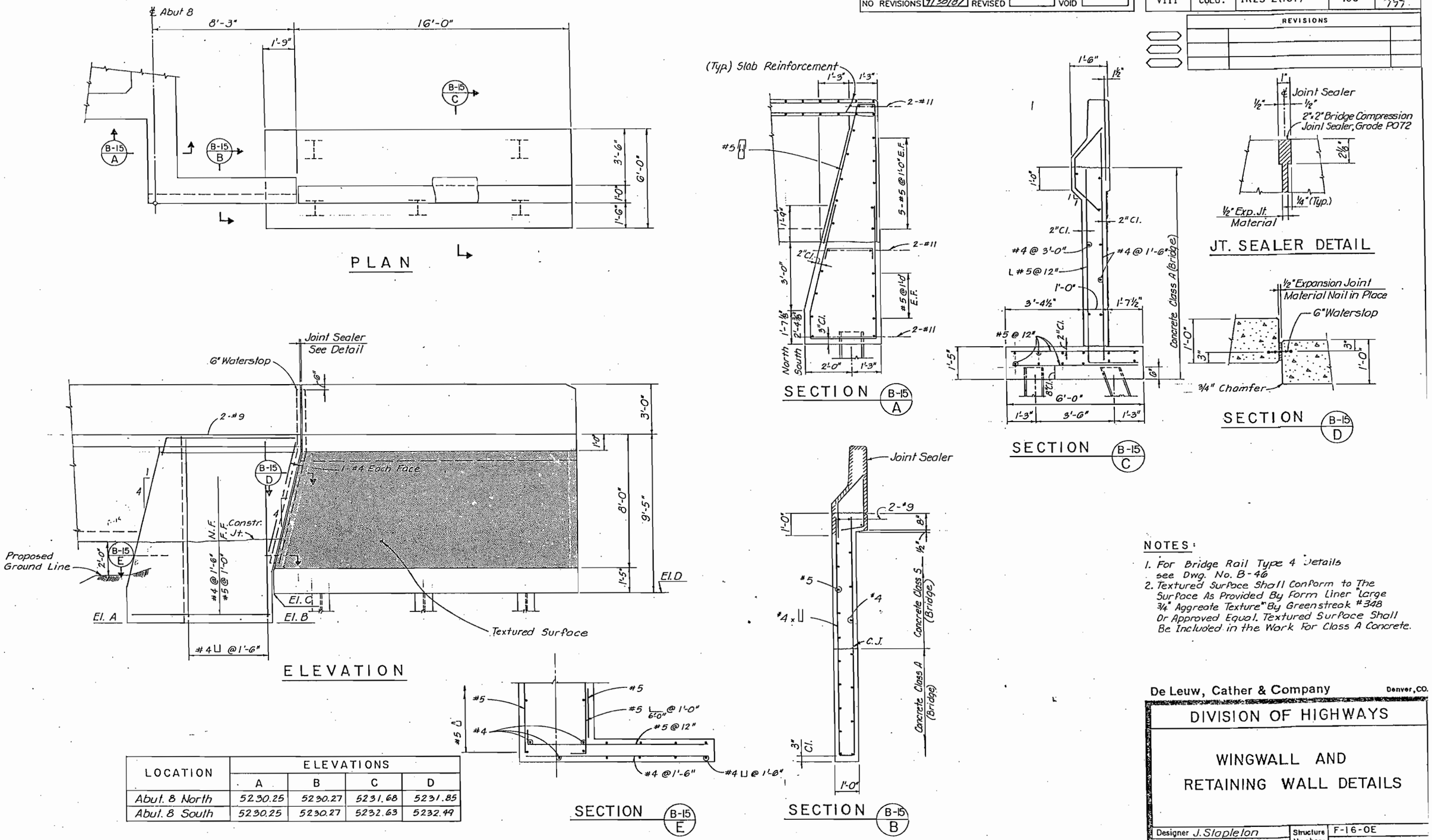

LOCATION	ELEVATIONS			
	A	B	C	D
Abut. 8 North	5230.25	5230.27	5231.68	5231.85
Abut. 8 South	5230.25	5230.27	5232.63	5232.49

NOTES:

1. For Bridge Rail Type 4 Details see Dwg. No. B-46
2. Textured Surface Shall Conform to The Surface As Provided By Form Liner "Large 3/4" Aggreate Texture" By Greenstreak #348 Or Approved Equal. Textured Surface Shall Be Included in the Work For Class A Concrete.

	INITIAL	DATE			
DESIGNED BY	J.L.S.	8-85	CHECKED BY	J.L.S.	9-85
CHECKED BY			QUANTITIES BY	R.M.H.	11-85
DETAILED BY	V.V.V., R.S.P.	8-85	CHECKED BY		

De Leuw, Cather & Company Denver, CO.

DIVISION OF HIGHWAYS

WINGWALL AND RETAINING WALL DETAILS

Designer J. Stapleton
Detailer V. Villao, R. Panning
Structure Numbers F-16-OE
Drawing Number B-15 of 50 Drawings

Revision Dates (Preliminary Stage Only)

F COLORADO
EPARTMENT OF HIGHWAYS
N OF HIGHWAYS:
I. FORM NO. 126:
:B. 1984

AS CONSTRUCTED			
NO REVISIONS 7/30/87	REVISED		VOID

FED.ROAD REGION	DIVISION	PROJ. NO.	SHEET NO.	SHEET TOTALS
VIII	COLO.	IR 25-2(187)	107	~~170~~ 177

REVISIONS

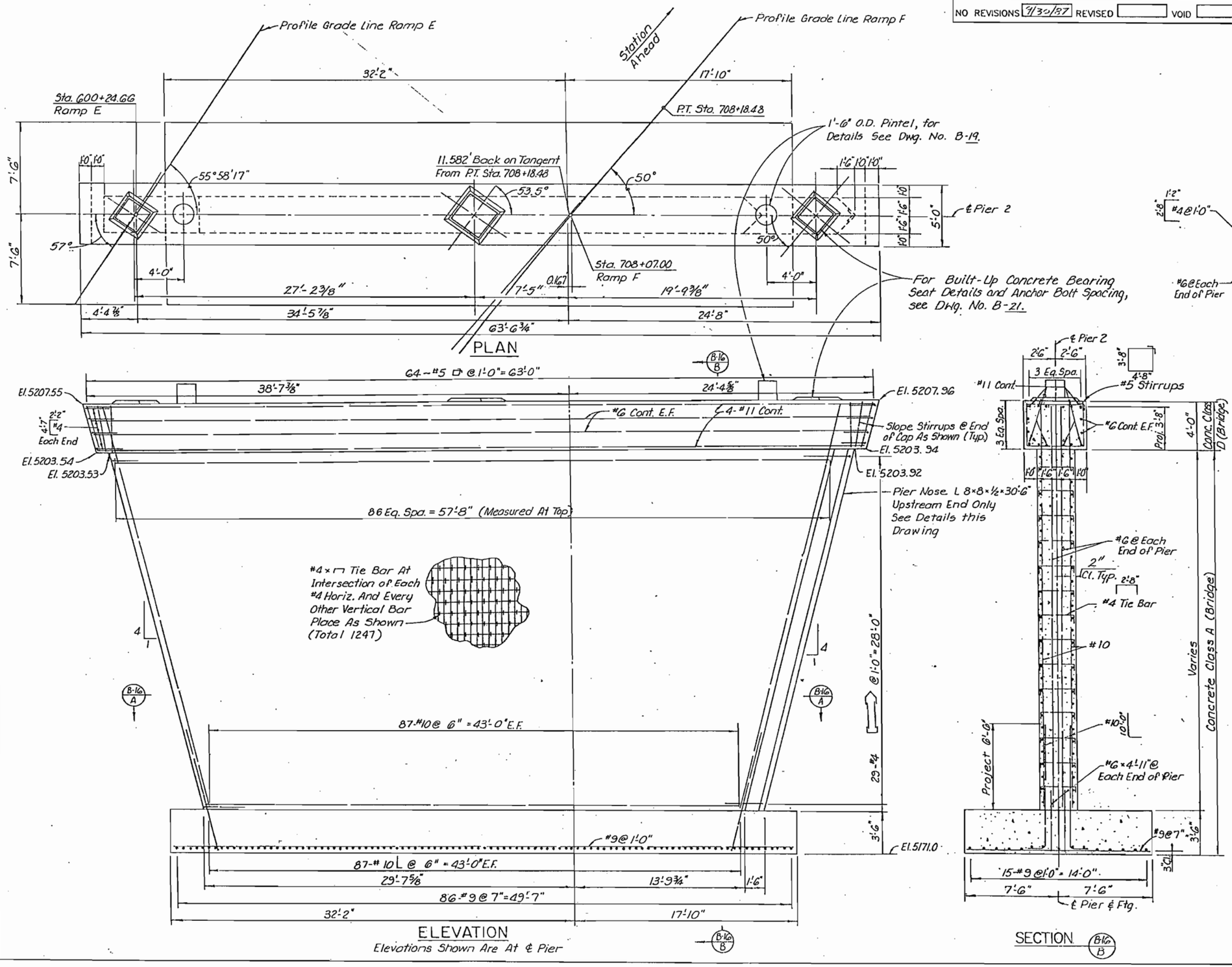

INITIAL		
DESIGNED BY	J.L.S.	9-85
CHECKED BY	R.D.K.	1-86
DETAILED BY	R.M.H.	9-85
CHECKED BY	J.L.S.	9-85
QUANTITIES BY	R.M.H.	11-85
CHECKED BY	Y.K.	1-86

De Leuw, Cather & Company — Denver, CO.

DIVISION OF HIGHWAYS

PIER 2 DETAILS

Designer J. Stapleton		Structure Numbers	F-16-NK
Detailer R. Hinshow			
Drawing Number B-16	of 50	Drawings	

Revision Dates (Preliminary Stage Only)

COLORADO
DEPARTMENT OF HIGHWAYS
DIVISION OF HIGHWAYS
FORM NO. 126
1984

AS CONSTRUCTED		
NO REVISIONS	REVISED 7/30/87	VOID

FED. ROAD REGION	DIVISION	PROJ. NO.	SHEET NO.	SHEET TOTALS
VIII	COLO.	IR 25-2(187)	108	110 / 7

REVISIONS

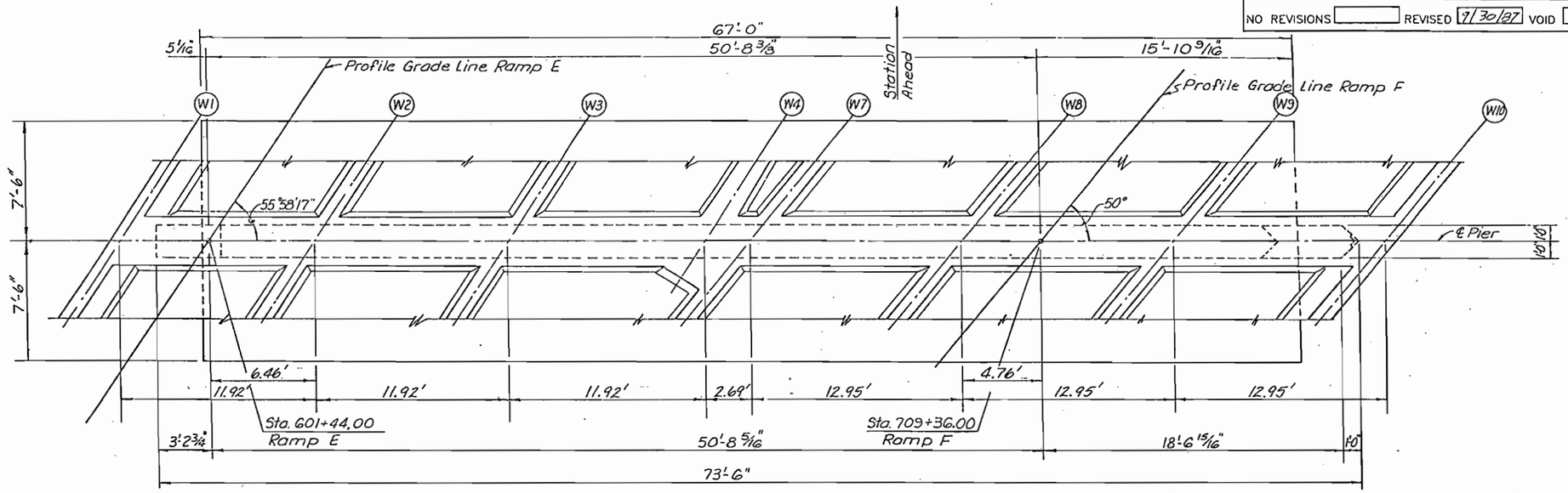

PLAN

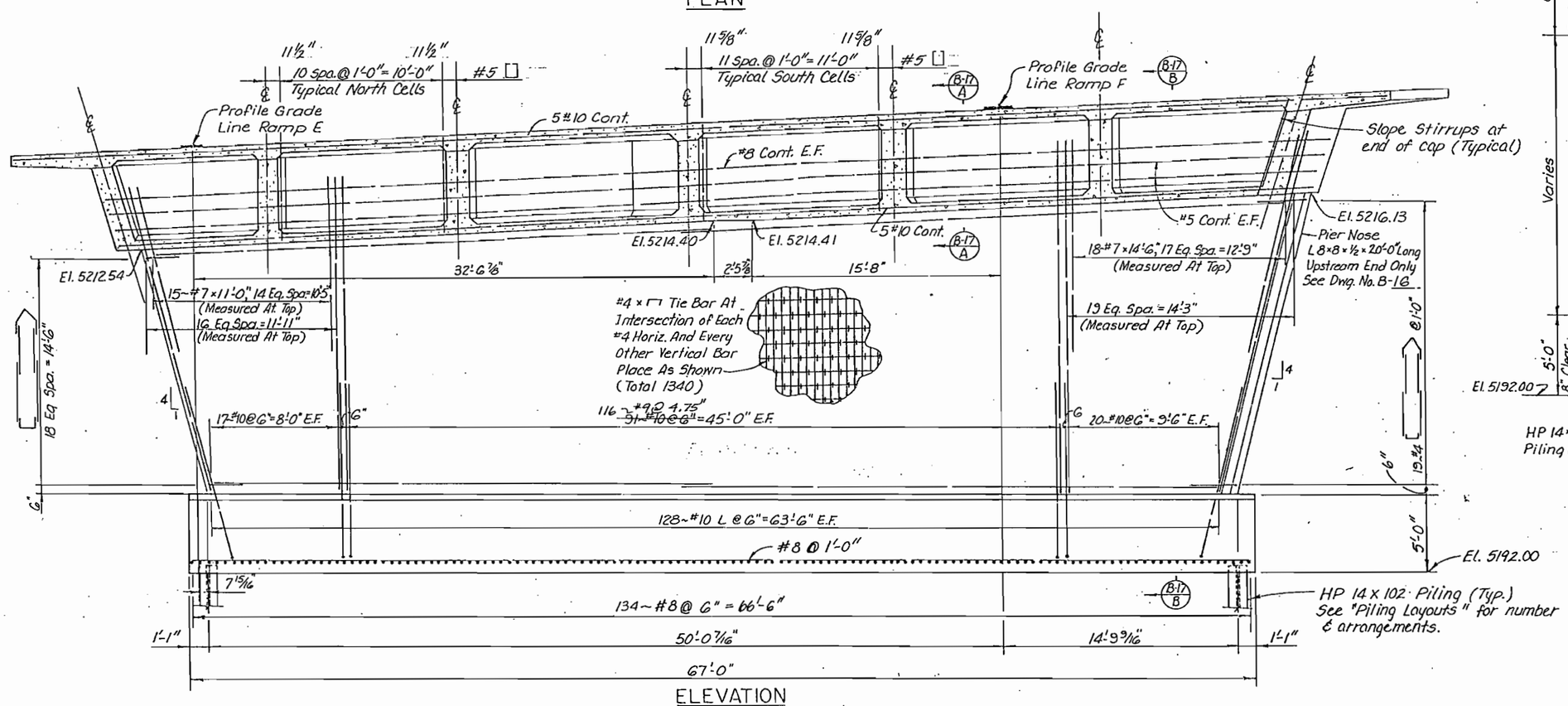

ELEVATION

Elevations Shown Are At ℄ Pier

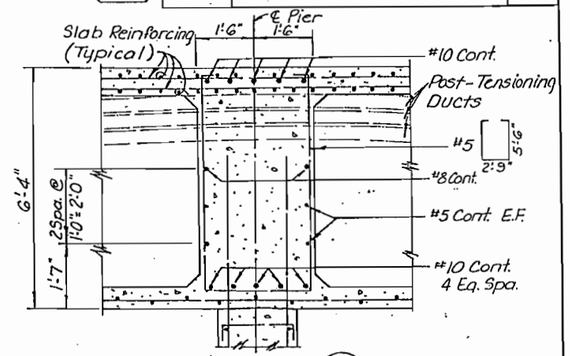

SECTION B-17 A

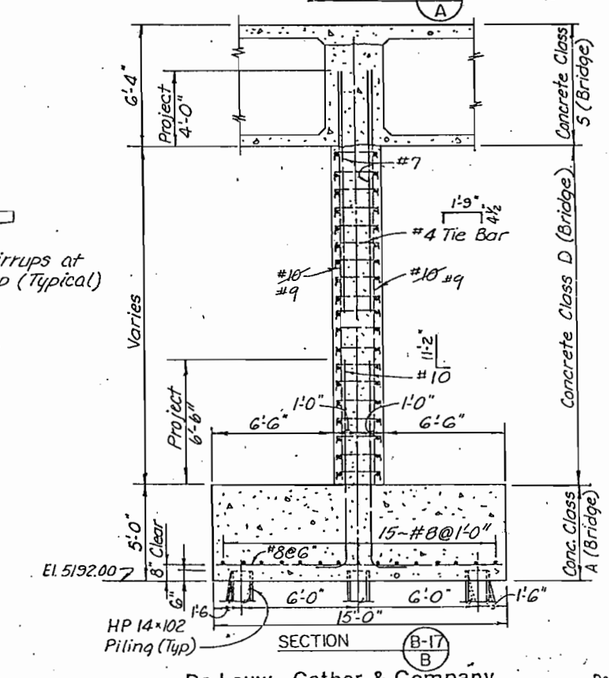

SECTION B-17 B

De Leuw, Cather & Company Denver, CO.

DIVISION OF HIGHWAYS

PIER 3 DETAILS

Designer J. Stapleton		Structure Numbers	F-16-NK
Detailer R. Hinshaw			
Drawing Number B-17	of 50	Drawings	

Revision Dates (Preliminary Stage Only)

INITIAL	DATE	CHECK	
J.L.S.	9-85	J.L.S.	9-85
R.D.K.	9-85	R.M.H.	11-85
R.M.H.	9-85	Y.K.	1-86
DESIGNED BY	CHECKED BY	DETAILED BY	QUANTITIES BY	CHECKED BY

COLORADO
ARTMENT OF HIGHWAYS
OF HIGHWAYS:
FORM NO. 126:
. 1984

AS CONSTRUCTED			
NO REVISIONS	REVISED 9/30/87	VOID	

FED.ROAD REGION	DIVISION	PROJ. NO.	SHEET NO.	SHEET TOTALS
VIII	COLO.	IR25-2(187)	109	~~110~~ 111

REVISIONS

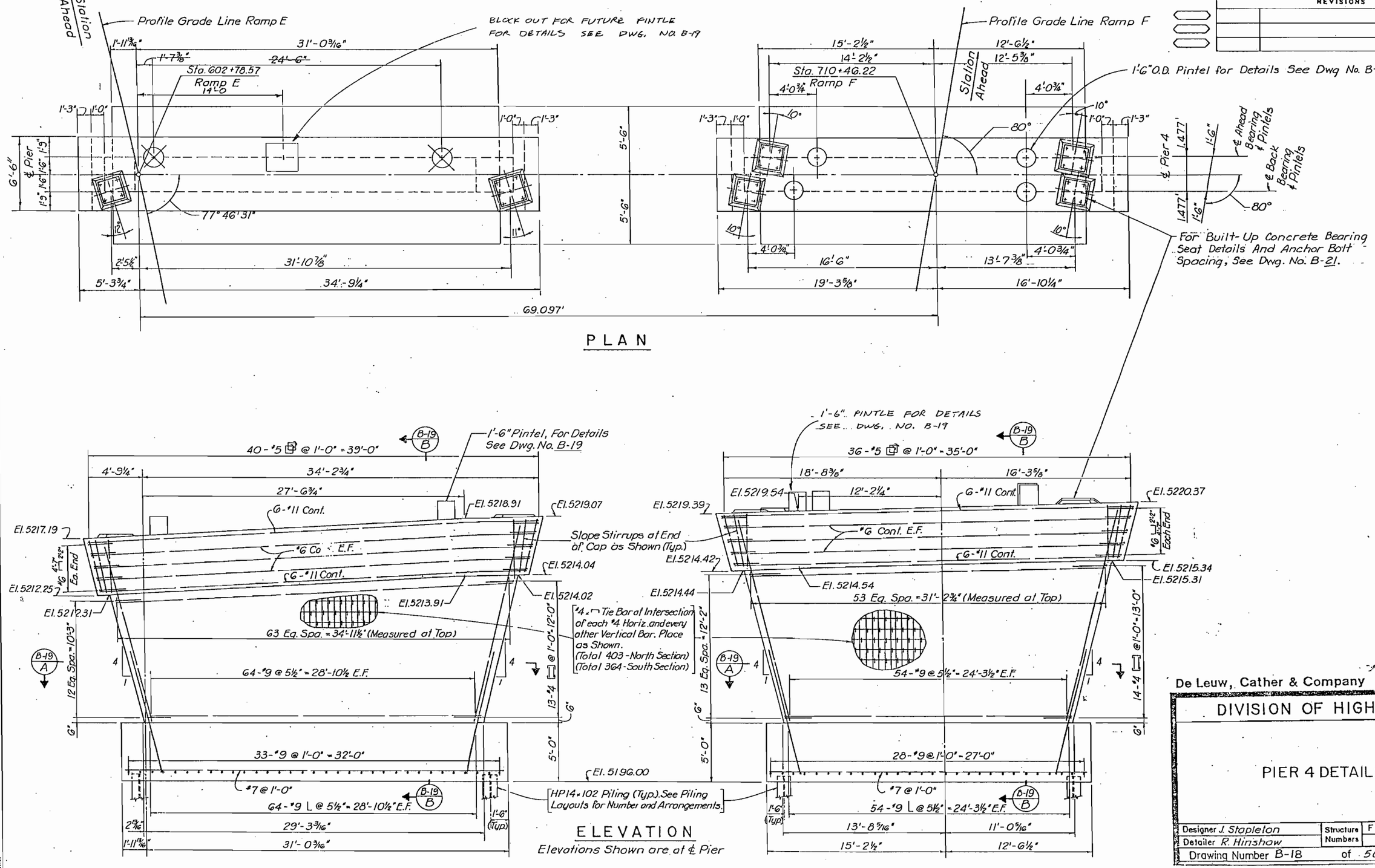

INITIAL		CHECKED BY		
DESIGNED BY	J.L.S.	10-85	J.L.S.	10-85
CHECKED BY	R.D.K.	1-86	R.M.H.	1-85
DETAILED BY	Y.V.V.	10-85	Y.K.	1-86

De Leuw, Cather & Company Denver, CO.

DIVISION OF HIGHWAYS

PIER 4 DETAILS

Designer J. Stapleton
Detailer R. Hinshaw
Structure Numbers F-16-NK
Drawing Number B-18 of 50 Drawings

Revision Dates (Preliminary Stage Only)

COLORADO
PARTMENT OF HIGHWAYS
I OF HIGHWAYS:
FORM NO. 126:
B. 1984

AS CONSTRUCTED			
NO REVISIONS		REVISED 7/30/87	VOID

FED.ROAD REGION	DIVISION	PROJ. NO.	SHEET NO.	SHEET TOTALS
VIII	COLO.	IR 25-2 (187)	110	110

REVISIONS		

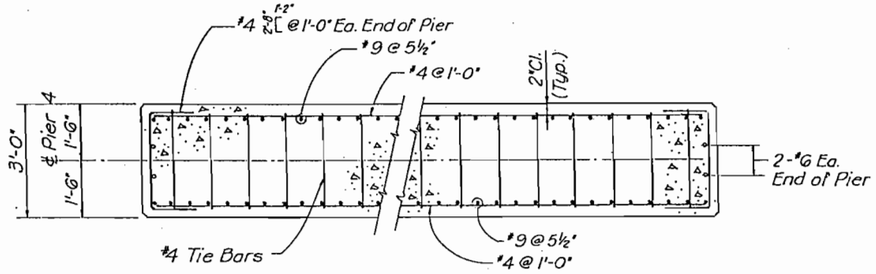

SECTION B-18 A

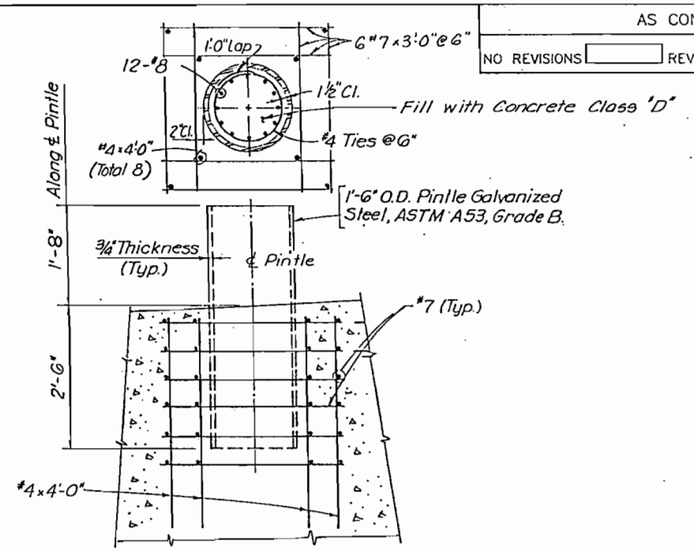

PINTLE DETAIL

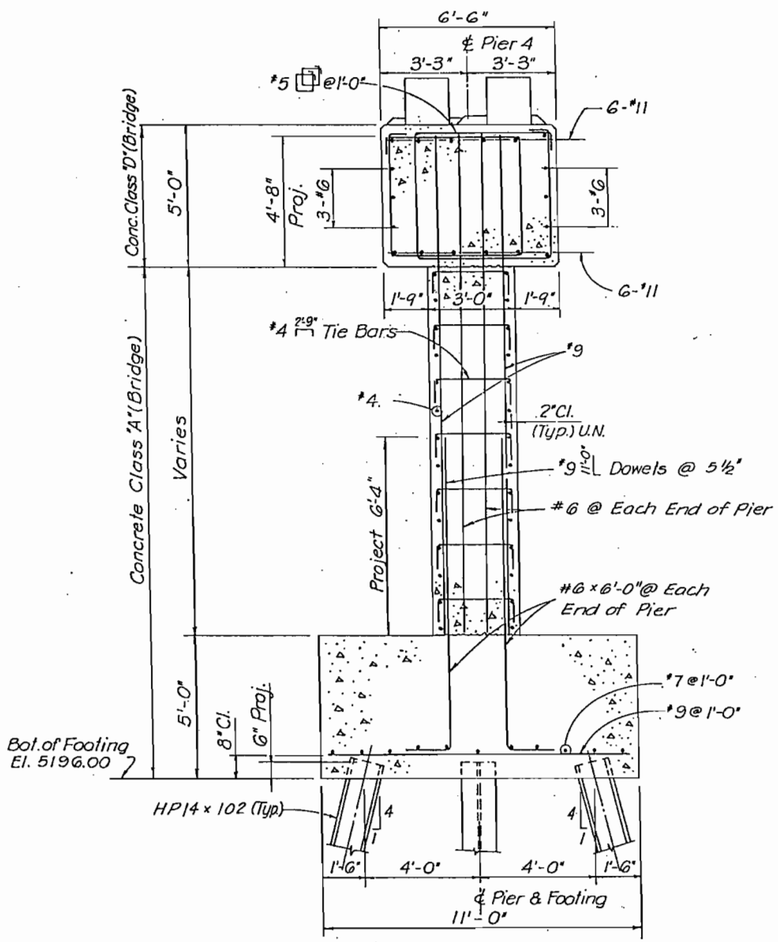

SECTION B-18 B

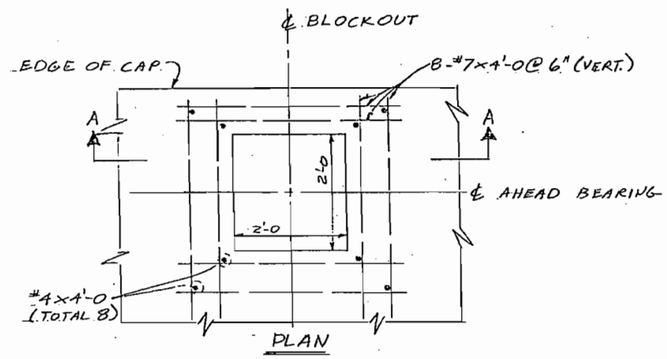

PLAN

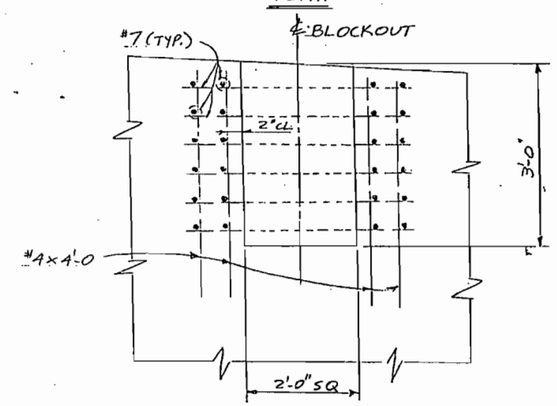

SECTION A-A

BLOCKOUT DETAIL

De Leuw, Cather & Company Denver, CO.

DIVISION OF HIGHWAYS

PIER 4 SECTIONS

Designer J. Stapleton		Structure Numbers	F-16-NK
Detailer V. Villao			
Drawing Number B-19	of 50	Drawings	

Revision Dates (Preliminary Stage Only)

DESIGNED BY	INITIAL J.L.S.	DA. 11-85	CHECKED BY	J.L.S.	11-85
CHECKED BY	R.D.K.	1-86	QUANTITIES BY	R.M.H.	11-85
DETAILED BY	V.V.V.	11-85	DRAFTED BY	Y.K.	12-85

OF COLORADO
DEPARTMENT OF HIGHWAYS
ON OF HIGHWAYS:
H. FORM NO.126:
EB. 1984

AS CONSTRUCTED			
NO REVISIONS 9/30/87	REVISED		VOID

FED.ROAD REGION	DIVISION	PROJ. NO.	SHEET NO.	SHEET TOTALS
VIII	COLO.	IR 25-2(187)	111	~~170~~ 7

REVISIONS

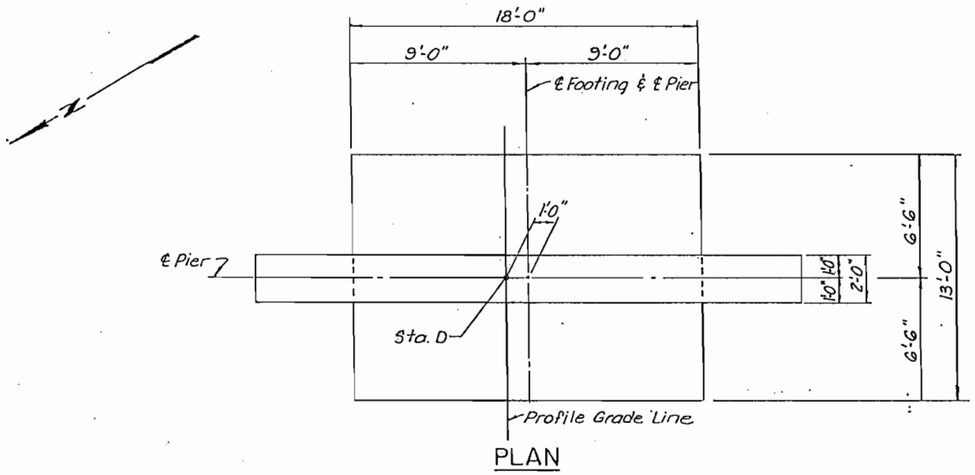

PLAN

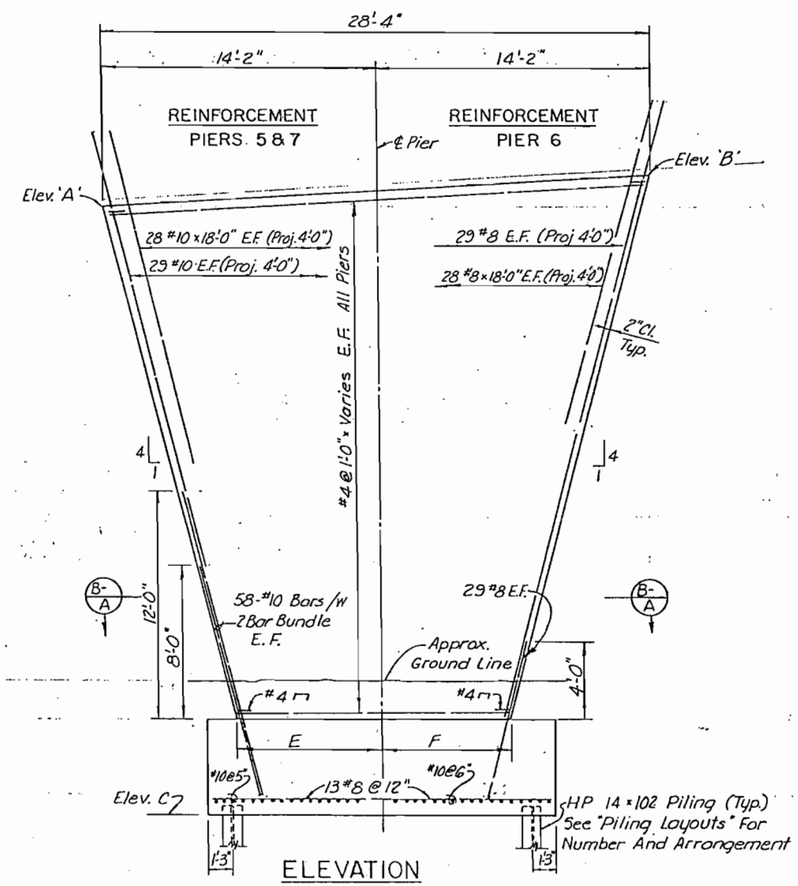

ELEVATION

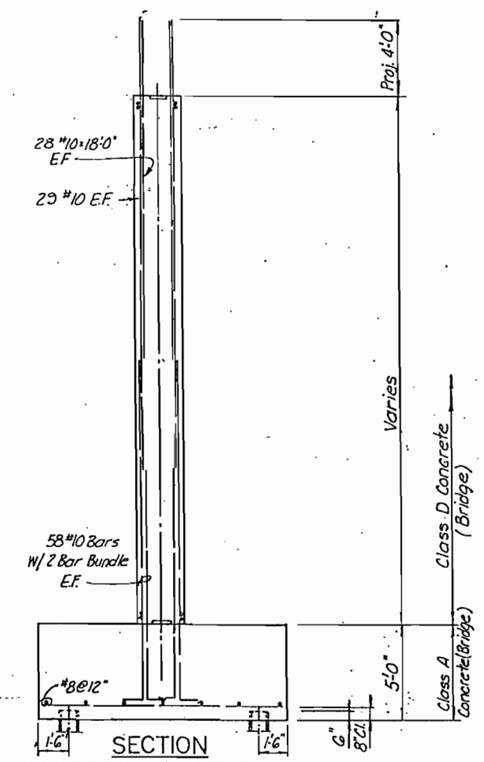

SECTION

PIERS 5 & 7 SHOWN PIER 6 SIMILAR

* Spacing of #4 Bars Varies From 1'-0" At Bottom Of Column To 2'-0" At Top of Column

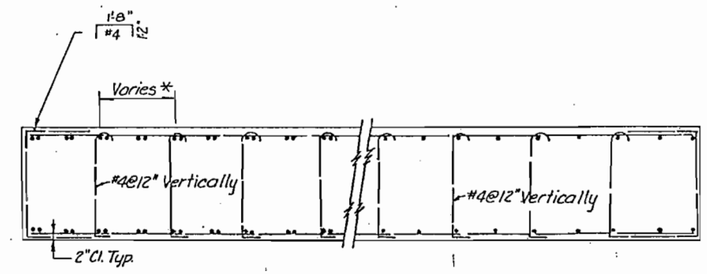

REINFORCEMENT
PIERS 5 & 7

REINFORCEMENT
PIER 6

SECTION B-A

PIER	ELEV. A	ELEV. B	ELEV. C	STA. D	E	F
5	5225.82	5226.61	5194.00	711+63.11	7'-5½"	7'-3¼"
6	5230.42	5232.12	5199.00	713+13.11	7'-6¾"	7'-1¾"
7	5233.44	5235.14	5201.00	714+63.11	7'-3¾"	6'-10½"

De Leuw, Cather & Company — Denver, CO.

DIVISION OF HIGHWAYS

PIER DETAILS
PIERS 5,6 & 7

Designer R. Koester		Structure Numbers	F-16-OE
Detailer R. Hinshaw			
Drawing Number B-20	of 50	Drawings	

Revision Dates (Preliminary Stage Only)

INITIAL		CHECKED BY	
DESIGNED BY	R.D.K. 9-85	QUANTITIES BY	R.D.K. 10-85
CHECKED BY	R.M.H. 9-85	CHECKED BY	R.M.H. 11-85
DETAILED BY	R.M.H. 9-85		

OF COLORADO
DEPARTMENT OF HIGHWAYS
ON OF HIGHWAYS:
H. FORM NO. 126:
ED. 1984

AS CONSTRUCTED		
NO REVISIONS 9/30/87	REVISED	VOID

FED. ROAD REGION	DIVISION	PROJ. NO.	SHEET NO.	SHEET TOTALS
VIII	COLO.	IR 25-2(187)	112	170

REVISIONS

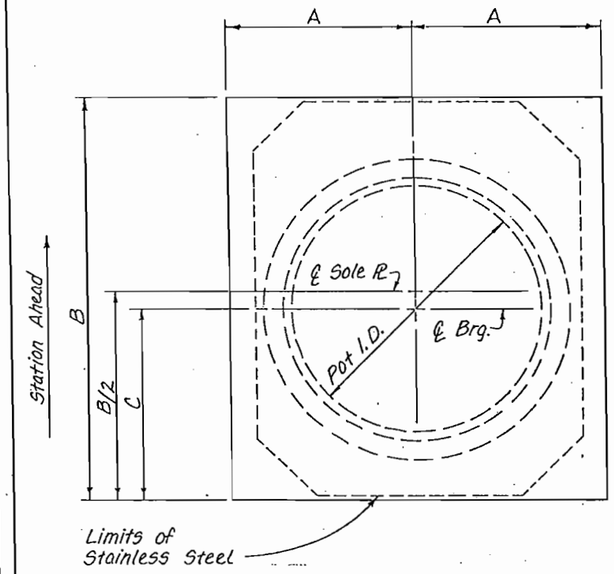

SOLE PLATE DETAIL

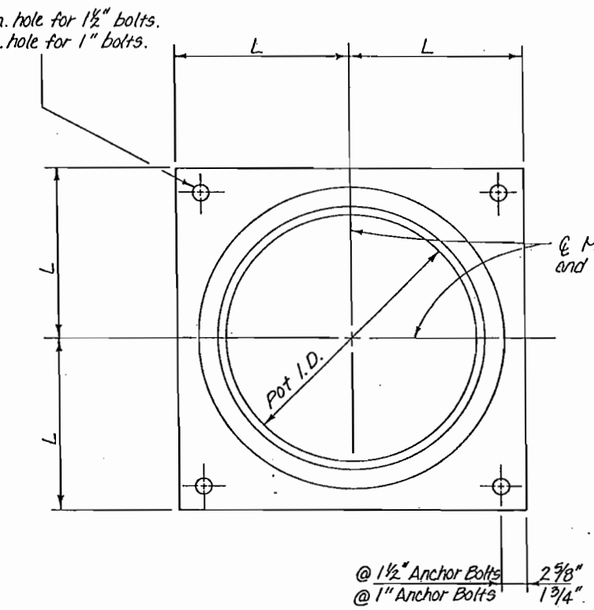

MASONRY PLATE DETAIL

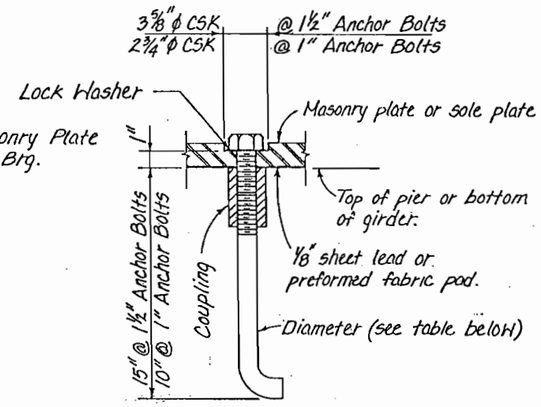

ANCHOR BOLT DETAIL

NOTES

ALL STRUCTURAL STEEL FOR THE BEARING DEVICES, INCLUDING SOLE PLATES AND MASONRY PLATES, SHALL BE AASHTO M-183 (ASTM A-36).

THE BEARING DEVICE SHALL BE SECURED TO THE SUPPORT WITH THE USE OF AN ANCHORAGE SYSTEM WHICH ALLOWS FOR FUTURE REPLACEMENT OF THE BEARINGS WITHOUT JACKING THE SUPERSTRUCTURE MORE THAN 1/4". AN ALTERNATE BEARING AND ANCHORAGE SYSTEM MAY BE SUBSTITUTED UPON APPROVAL BY THE ENGINEER.

THE BEARING HEIGHTS (H) SHOWN ARE THE MINIMUM REQUIRED. PIER SEAT ELEVATIONS SHALL BE ADJUSTED FOR THE BEARINGS PROVIDED. MASONRY AND SOLE PLATE THICKNESS (T AND D) MUST BE CHECKED IF THE PLATE SIZES AND POT DIMENSIONS ARE DIFFERENT FROM THOSE GIVEN IN THE TABLE.

THE BEARING DEVICE SHALL BE POSITIONED SYMMETRICALLY ABOUT THE TRANSVERSE AND LONGITUDINAL CENTERLINE OF BEARING. THE CENTERLINE OF SOLE PLATE SHALL BE OFFSET FROM THE CENTERLINE OF BEARING AS SHOWN ON THE PLAN. THE MINIMUM CLEARANCE FROM THE OUTSIDE EDGE OF THE BEARING DEVICE, ON THE CONCRETE SURFACE, TO THE EDGE OF CONCRETE PIER SHALL BE 3".

THE ALLOWABLE BEARING STRESS ON CONCRETE SURFACES SHALL BE EQUAL TO 0.3 f'c (f'c = THE STRENGTH OF THE LOADED CONCRETE SURFACE), UNLESS MODIFIED BY BEARING DATA TABLE.

THE LONGITUDINAL MOVEMENT GIVEN IN THE BEARING DATA TABLE IS BASED ON A TOTAL TEMPERATURE CHANGE OF 90°F (45°F RISE AND 45°F DROP FROM A MEAN TEMPERATURE OF 40°F) AND EFFECTS DUE TO PRESTRESS, SHRINKAGE, AND CREEP. THE BEARING DEVICE SHALL HAVE A MINIMUM OF 2 INCHES ADDITIONAL MOVEMENT CAPACITY EACH WAY FROM CENTERLINE BEARING.

PERMANENT INDEX MARKS SHALL BE PLACED ON THE SIDE OF THE BEARING SO THAT THE TOP PLATE MAY BE POSITIONED IN CORRECT RELATION TO THE CENTERLINE BASE POT FOR THE TEMPERATURE AT THE TIME THE GIRDERS ARE PLACED. DIMENSION (C) IS FROM THE BACK STATION END OF THE SOLE PLATE TO THE CENTERLINE BASE POT AT 40°F.

SEE PIER DETAILS FOR BEARING LOCATIONS.

DIMENSION (C) VARIES TO COMPENSATE FOR GIRDER MOVEMENT DUE TO SHRINKAGE, CREEP, AND ELASTIC SHORTENING.

ALL SURFACES OF STRUCTURAL STEEL COMPONENTS NOT CONNECTED TO STAINLESS STEEL OR TFE SHALL BE COMPLETELY ZINC METALIZED IN ACCORDANCE WITH AMERICAN WELDING SOCIETY DESIGNATION AWS C.2.2, LATEST ISSUE, TO A MINIMUM THICKNESS OF EIGHT MILS ON EXPOSED SURFACES AND THREE MILS ON PROTECTED SURFACES. A HOT-GALVANIZING PROCESS IN ACCORDANCE WITH AASHTO M-111 MAY BE SUBSTITUTED FOR THE ZINC METALIZING.

ALL MATERIALS AND LABOR REQUIRED FOR COMPLETION OF THIS WORK, INCLUDING SOLE PLATES, MASONRY PLATES, AND ALL ANCHORAGE HARDWARE SHALL BE INCLUDED IN ITEM NO. 512 BEARING DEVICE (TYPE III).

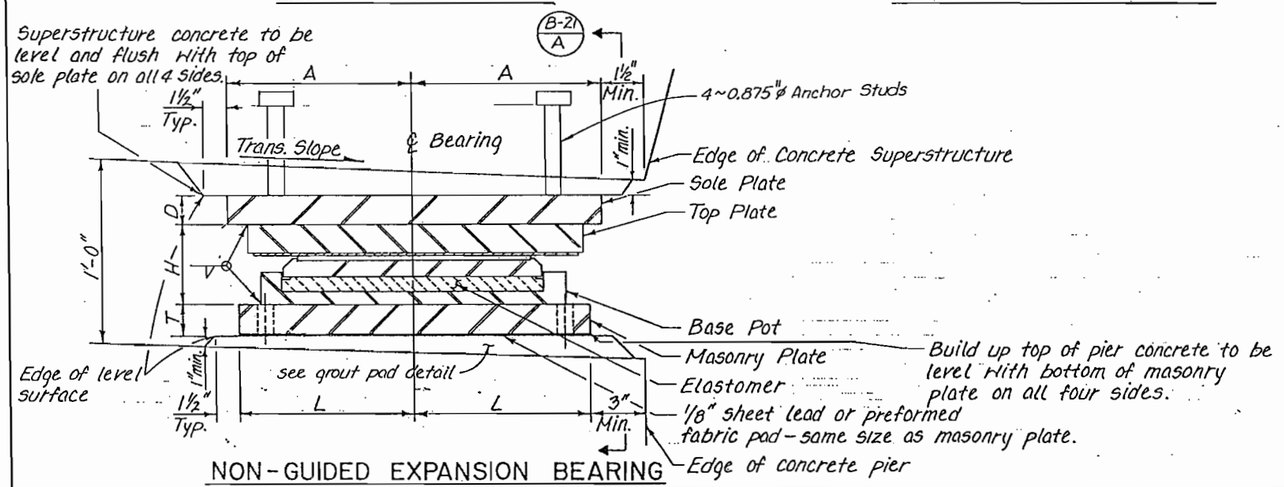

NON-GUIDED EXPANSION BEARING

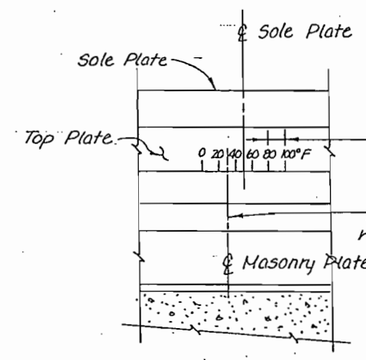

SECTION B-21 A

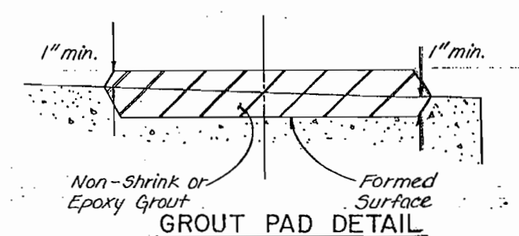

GROUT PAD DETAIL

BEARING DATA TABLE

BEARING LOCATION	NO. REQ'D	DIMENSIONS (INCHES) A	B	C	D	H	L	T	MOVEMENT AT (±45°)	INDEX GRADUATION @ 20°F	ROTATION	VERTICAL LOAD MIN. (KIPS)	MAX. (KIPS)	CONCRETE BEARING STRESS (ALLOWABLE)	ANCHOR BOLTS
Pier 2 Left	1	16.50	37.00	22.58	1¾	3.42	15.00	1½	4.85"	0.34"	<1°	564.9	938.5	1,950 p.s.i	4~1"ϕ
Pier 2 Center	1	19.50	43.00	25.58	1¾	4.30	18.00	1½	4.85"	0.34"	<1°	1013.7	1650.5	1,600 p.s.i.	4~1½"ϕ
Pier 2 Right	1	16.50	37.00	22.58	1¾	3.42	15.00	1½	4.85"	0.34"	<1°	575.2	973.4	1,950 p.s.i.	4~1"ϕ
North Pier 4, Back Left	1	10.00	23.50	10.50	1½	3.12	12.00	1¼	4.04"	0.28"	<1°	378.3	586.9	1,350 p.s.i.	4~1"ϕ
North Pier 4, Back Right	1	11.00	25.00	12.00	1½	3.33	14.00	1¼	4.04"	0.28"	<1°	513.2	789.5	1,350 psi.	4~1"ϕ
South Pier 4, Back Left	1	10.00	23.50	10.50	1½	2.78	12.00	1¼	4.06"	0.28"	<1°	332.5	505.5	1,350 p.s.i.	4~1"ϕ
South Pier 4, Back Right	1	10.00	23.50	10.50	1½	2.78	12.00	1¼	4.06"	0.28"	<1°	318.9	498.3	1,350 p.s.i.	4~1"ϕ
South Pier 4, Ahead Left	1	10.00	23.50	12.50	1½	3.12	12.00	1¼	3.86"	0.37"	<1°	382.0	542.6	1,350 p.s.i.	4~1"ϕ
South Pier 4, Ahead Right	1	10.00	23.50	12.50	1½	3.23	13.00	1¼	3.86"	0.37"	<1°	466.8	646.1	1,350 p.s.i.	4~1"ϕ

DESIGNED BY	J.L.S.	9-85	CHECKED BY J.L.S. 11-85
CHECKED BY	J.L.S.	9-85	QUANTITIES BY R.M.H. 11-85
DETAILED BY	S.Y.S.	9-85	CHECKED BY

De Leuw, Cather & Company Denver, CO.

DIVISION OF HIGHWAYS

BEARING DETAILS

(TYPE III)

Designer J. Stapleton		Structure Numbers	F-16-NK
Detailer S. Shibao			F-16-OE
Drawing Number B-21	of 50	Drawings	

Revision Dates (Preliminary Stage Only)

OF COLORADO
DEPARTMENT OF HIGHWAYS
ON OF HIGHWAYS:
H. FORM NO.126:
EB. 1984

AS CONSTRUCTED			
NO REVISIONS 9/30/87	REVISED	VOID	

FED.ROAD REGION	DIVISION	PROJ. NO.	SHEET NO.	SHEET TOTALS
VIII	COLO.	IR25-2(187)	113	~~170~~ 177

REVISIONS		

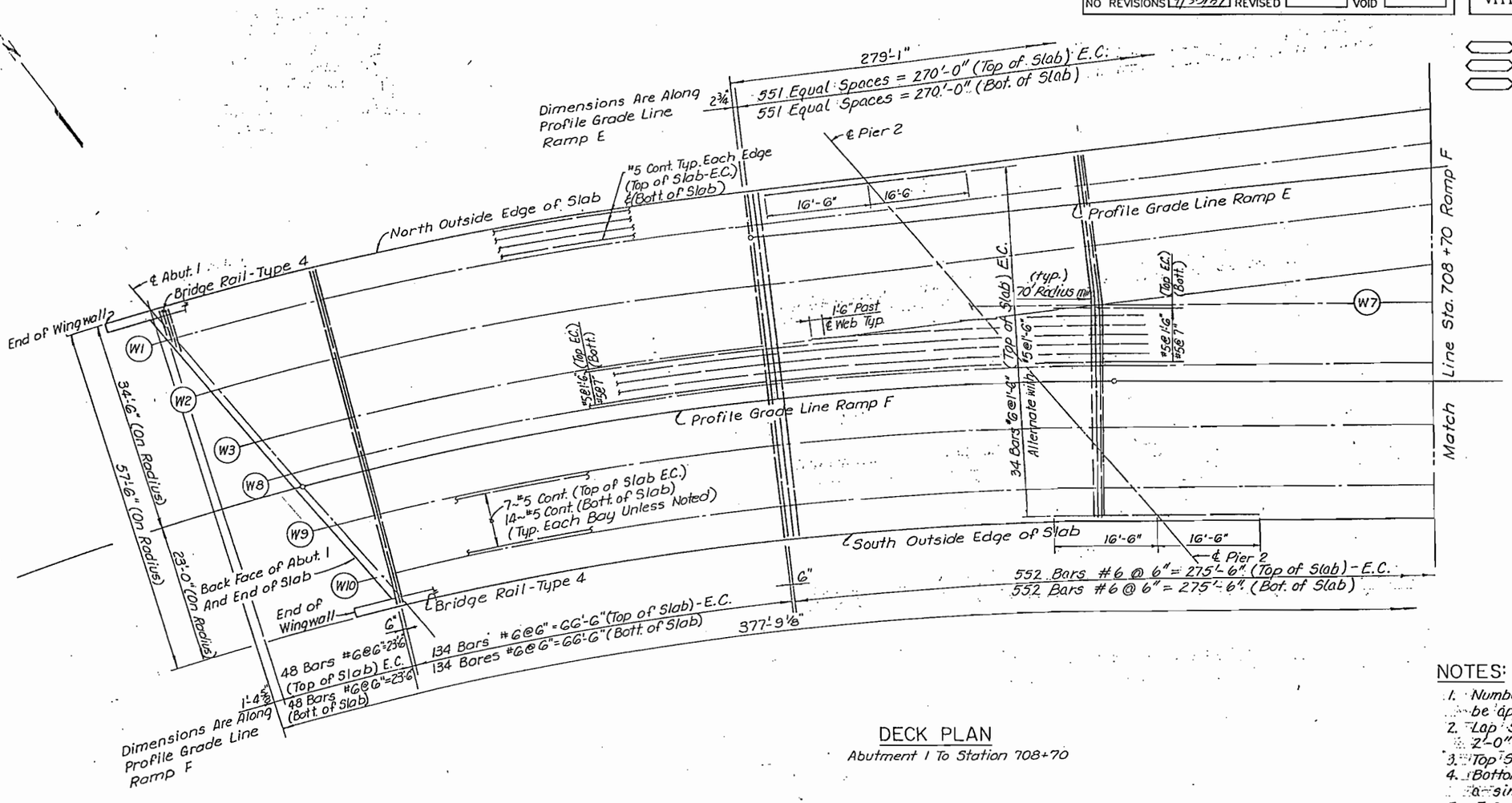

DECK PLAN

Abutment 1 To Station 708+70

NOTES:

1. Number and Location of Lap Splices Shall be approved by the Engineer.
2. Lap Splices shall be staggered at Least 2'-0" Minimum.
3. Top Slab Reinforcing is Shown and Noted.
4. Bottom Slab Reinforcing to be Placed in a similar manner.
5. E.C. = Epoxy Coated.
6. All Transverse Slab Reinforcing Shall Be placed Perpendicular to Center-line Girder Webs as Shown.

	INITIAL	DATE	CHECKED BY	J.L.S.	9-85
DESIGNED BY	J.L.S.	9-85	QUANTITIES BY	R.M.H.	11-85
CHECKED BY	R.M.H.	9-85	CHECKED BY		
DETAILED BY	R.M.H.	9-85			

De Leuw, Cather & Company — Denver, CO.

DIVISION OF HIGHWAYS

DECK PLAN

UNIT 1

Designer J. Stapleton		Structure Numbers	F-16-NK
Detailer R. Hinshaw			
Drawing Number B-22	of 50	Drawings	

Revision Dates (Preliminary Stage Only)

OF COLORADO
DEPARTMENT OF HIGHWAYS
ION OF HIGHWAYS:
H. FORM NO. 126:
FEB. 1984

AS CONSTRUCTED		
NO REVISIONS	REVISED 9/30/87	VOID

FED. ROAD REGION	DIVISION	PROJ. NO.	SHEET NO.	SHEET TOTALS
VIII	COLO.	IR25-2(187)	114	~~170~~ 177

REVISIONS		

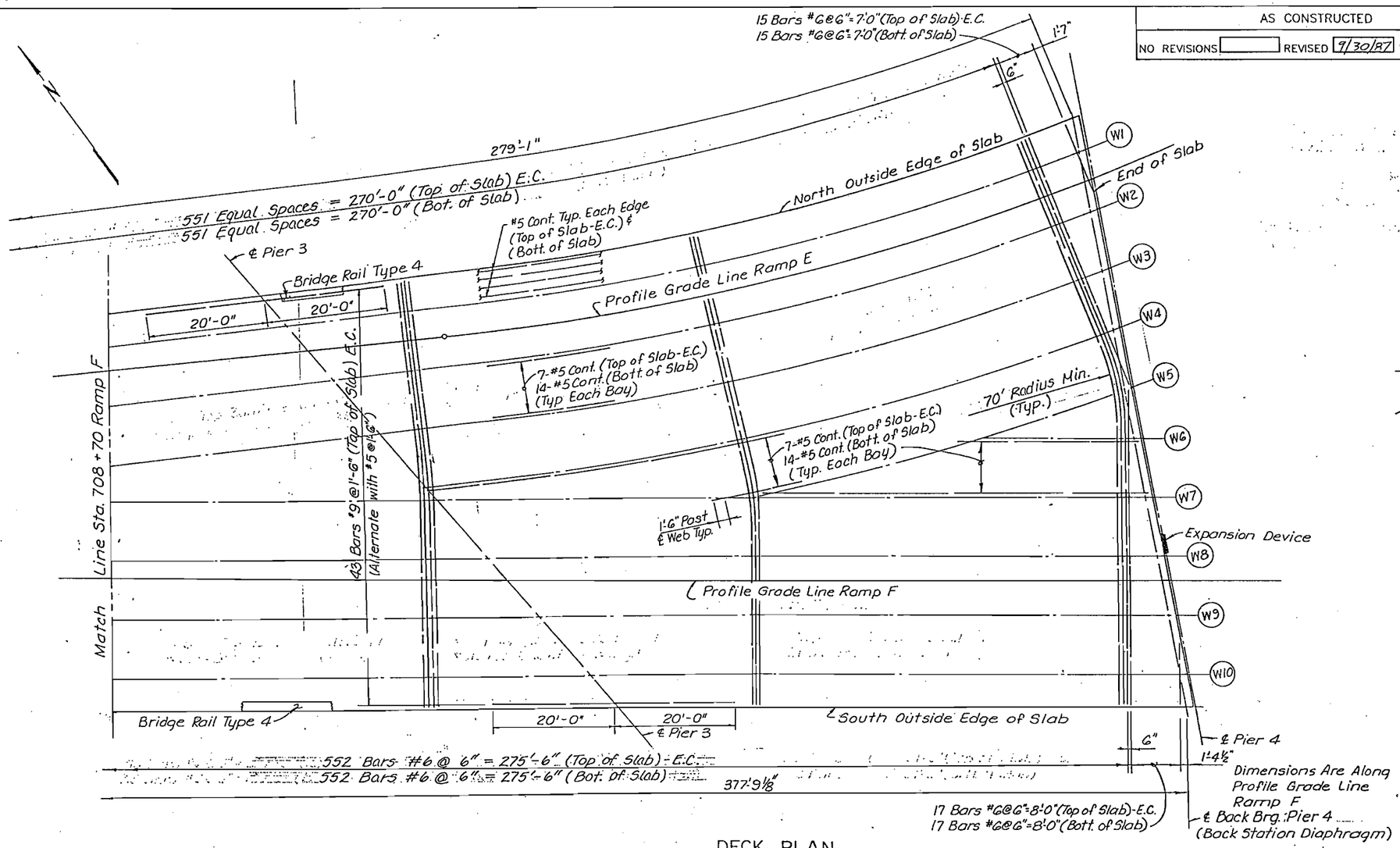

DECK PLAN
Station 708+70 To Pier 4

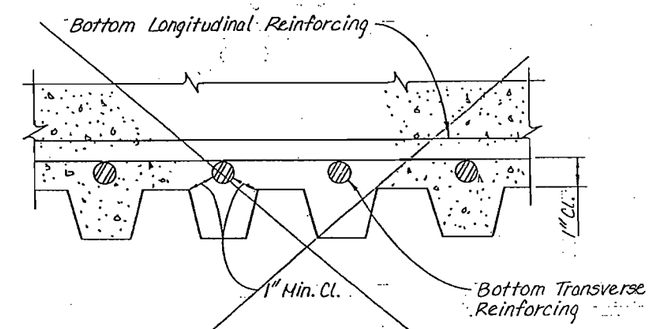

OPTIONAL-STAY-IN-PLACE-FORM DETAIL

Deck may be formed using permanent steel bridge deck forms. Form flutes and transverse slab reinforcing shall be placed perpendicular to the ℄ girders, see special provisions.

NOTES:

1. Number and Location of Lap Splices Shall be Approved by the Engineer.
2. Lap Splices Shall be Staggered at Least 2'-0" Minimum.
3. Top Slab Reinforcing is Shown and Noted.
4. Bottom Slab Reinforcing to be Placed in a Similar manner.
5. E.C. = Epoxy Coated.
6. All Transverse Slab Reinforcing Shall be Placed Perpendicular to Centerline Girder Webs as Shown.

	INITIAL	DATE			
DESIGNED BY	J.L.S.	9-85	CHECKED BY	J.L.S.	9-85
CHECKED BY	R.M.H.	9-85	QUANTITIES BY	R.M.H.	11-85
DETAILED BY			CLERICAL BY		

De Leuw, Cather & Company Denver, CO

DIVISION OF HIGHWAYS

DECK PLAN
UNIT 1

Designer J. Stapleton		Structure Numbers	F-16-NK
Detailer R. Hinshaw, S. Shibao			F-16-OE
Drawing Number B-23	of 50	Drawings	

Revision Dates (Preliminary Stage Only)

OF COLORADO
DEPARTMENT OF HIGHWAYS
ION OF HIGHWAYS:
H. FORM NO. 129:
FEB. 1984

REVISIONS		

AS CONSTRUCTED
NO REVISIONS 9/30/87 REVISED ____ VOID ____

FED. ROAD REGION	DIVISION	PROJ. NO.	SHEET NO.	SHEET TOTALS
VIII	COLO.	IR25-2(187)	115	~~170~~ 177

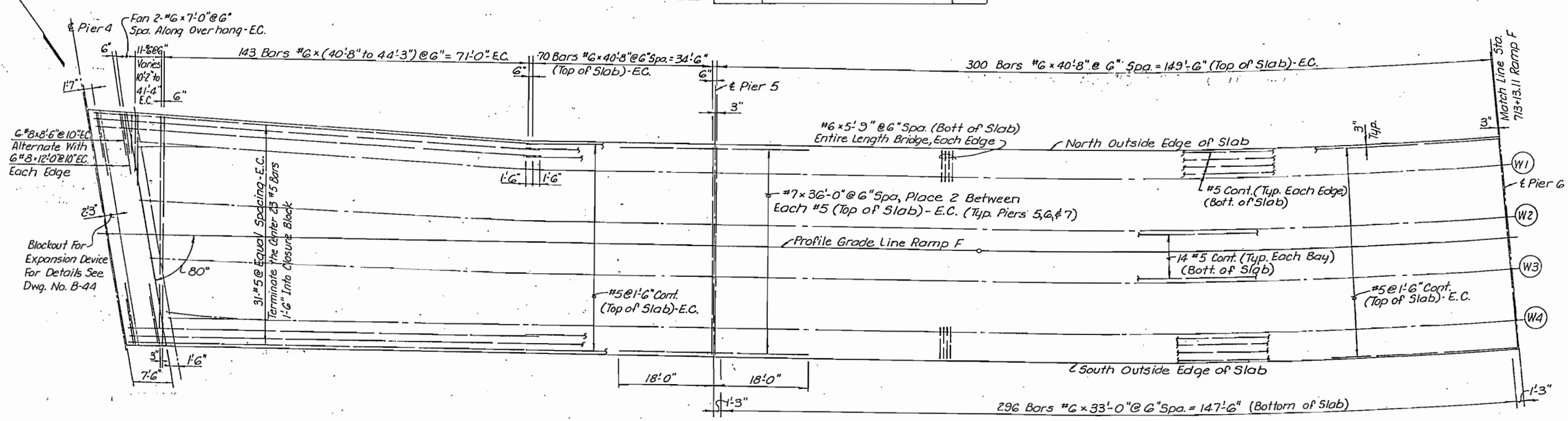

TOP REINFORCEMENT / DECK
SPAN 4

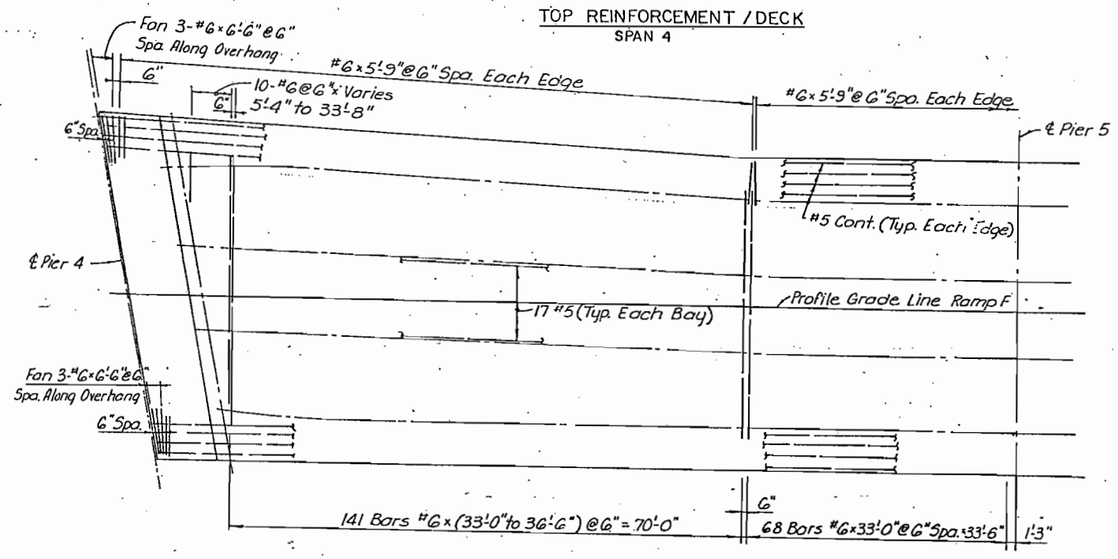

BOTTOM REINFORCEMENT / DECK
SPAN 4

TOP & BOTT. REINFORCEMENT / DECK

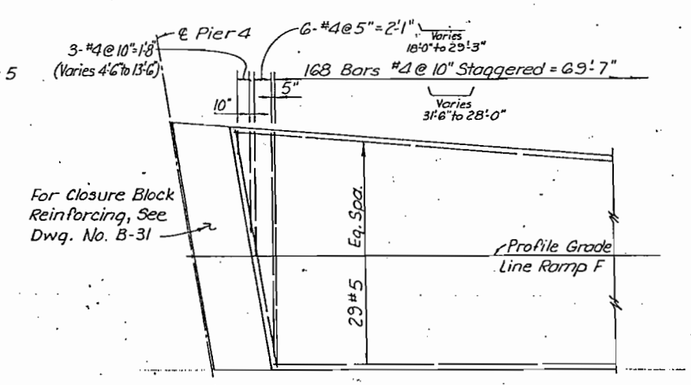

BOTTOM SLAB AT CLOSURE BLOCK
NEAR PIER 4

NOTES:

1. All Transverse Slab Reinforcing Shall Be Placed Radially And Dimensioned Along Profile Grade Line.
2. E.C. = Epoxy Coated
3. See Dwg. No. B-28 For Spacing of Longitudinal Reinforcing.

	INITIAL	DATE	CHECKED BY	DATE
DESIGNED BY	M.R.M.	9-85	M.R.M.	9-85
CHECKED BY			R.M.H.	11-85
DETAILED BY	R.M.H.	9-85	QUANTITIES BY	
			CHECKED BY	

De Leuw, Cather & Company Denver, Co

DIVISION OF HIGHWAYS

DECK PLAN
UNIT 2

Designer M. Merklinger
Detailer R. Hinshaw
Structure Numbers F-16-OE
Drawing Number B-24 of 50 Drawings

Revision Dates (Preliminary Stage Only)

OF COLORADO
DEPARTMENT OF HIGHWAYS
ON OF HIGHWAYS:
H. FORM NO. 126:
EB. 1964

REVISIONS		

AS CONSTRUCTED
NO REVISIONS 9/30/87 REVISED ____ VOID ____

FED.ROAD REGION	DIVISION	PROJ. NO.	SHEET NO.	SHEET TOTALS
VIII	COLO.	IR25-2(187)	116	~~119~~ 77

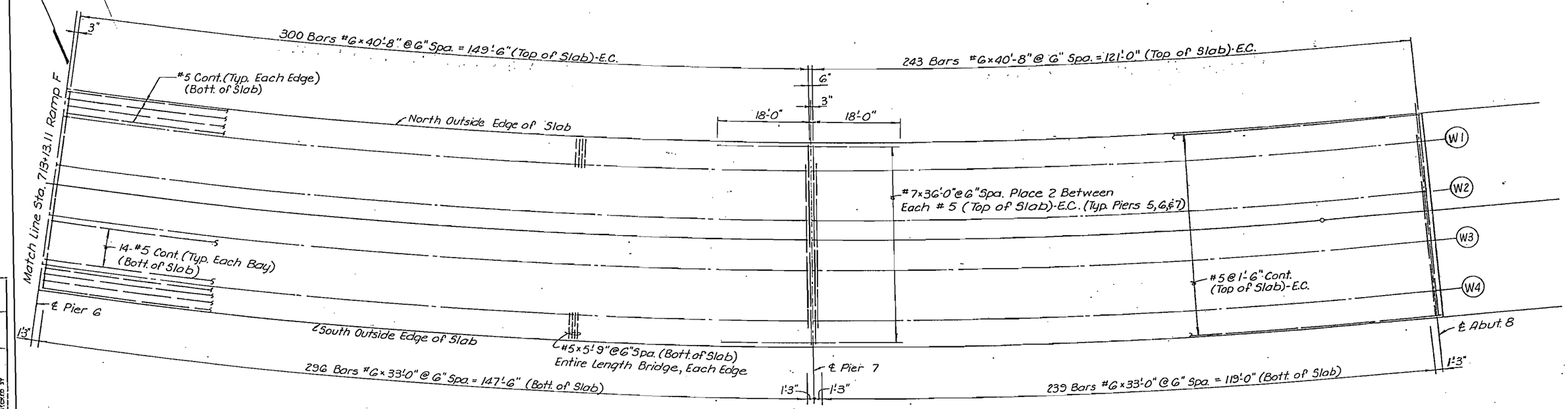

DECK PLAN

NOTES:

1. All Transverse Slab Reinforcing Shall Be Placed Radially And Dimensioned Along Profile Grade Line.
2. E.C. = Epoxy Coated
3. See Dwg. No. B-27 For Spacing of Longitudinal Reinforcing.

	INITIAL	DATE		
DESIGNED BY	M.R.M.	9-85	CHECKED BY	M.R.M. 9-85
CHECKED BY	R.M.H.	9-85	QUANTITIES BY	R.M.H. 11-85
DETAILED BY			CHECKED BY	

De Leuw, Cather & Company Denver, CO

DIVISION OF HIGHWAYS

DECK PLAN
UNIT (2)

Designer M. Merklinger		Structure Numbers	F-16-OE
Detailer R. Hinshow			
Drawing Number B-25	of 50	Drawings	

Revision Dates (Preliminary Stage Only)

OF COLORADO
DEPARTMENT OF HIGHWAYS
ON OF HIGHWAYS:
H. FORM NO. 126:
EB. 1984

AS CONSTRUCTED				
NO REVISIONS 9/30/87	REVISED		VOID	

FED. ROAD REGION	DIVISION	PROJ. NO.	SHEET NO.	SHEET TOTALS
VIII	COLO.	IR25-2(187)	117	599

REVISIONS

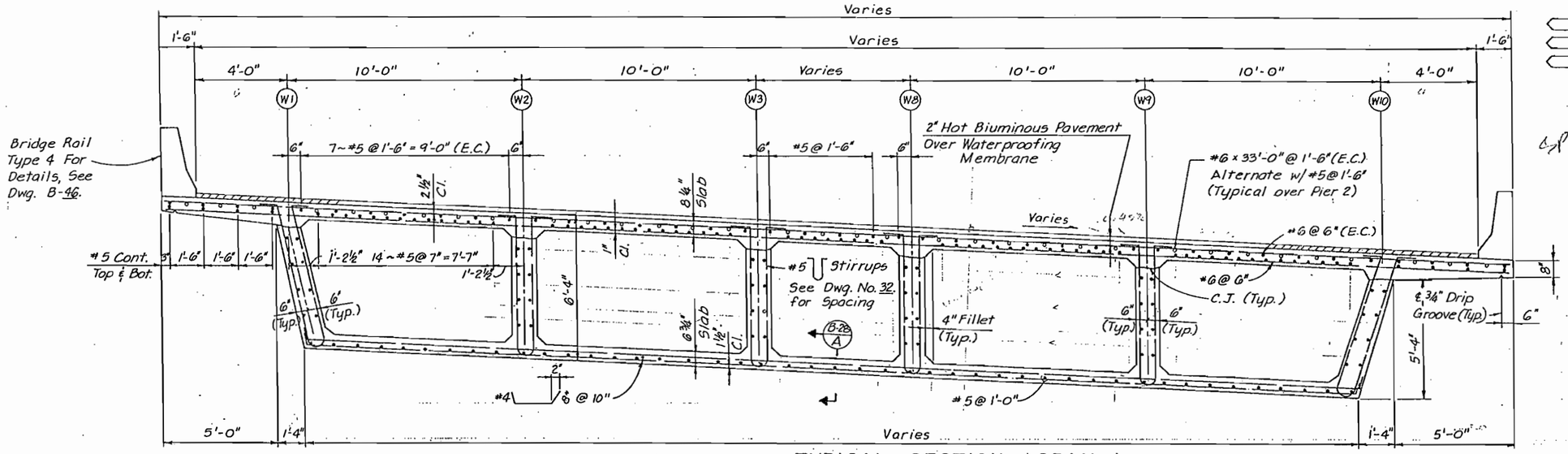

TYPICAL SECTION - SPAN 1

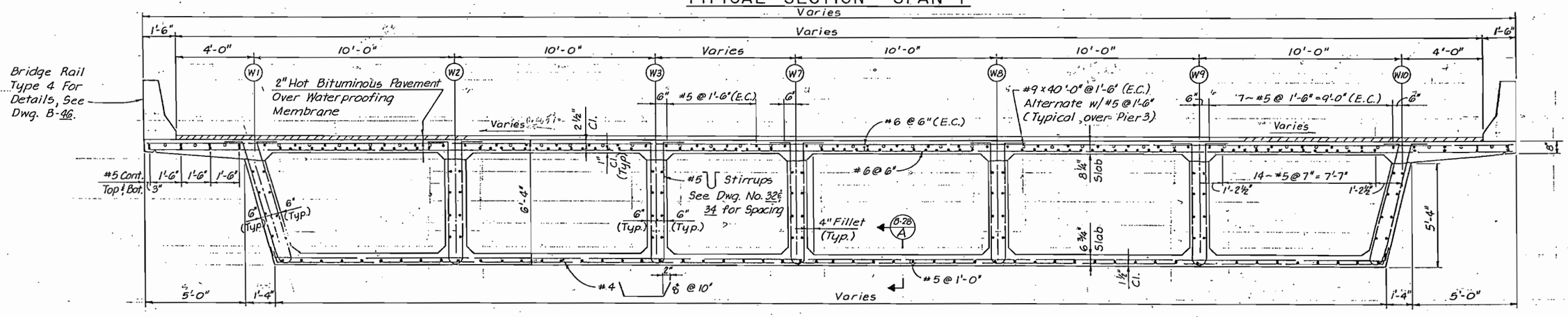

TYPICAL SECTION - SPAN 2

NOTES:
1. All Interior Webs to be Constructed Vertical

INITIAL	DATE	CHECKED BY	J.L.S.	10-85
J.L.S.	9-85	QUANTITIES BY	R.M.H.	11-85
R.S.P.	9-85	CHECKED BY		

DESIGNED BY
CHECKED BY
DETAILED BY

Span #1 =

A_s Top = 33 in²

A_s Bottom = 17.52

De Leuw, Cather & Company — Denver, CO.

DIVISION OF HIGHWAYS

SUPERSTRUCTURE DETAILS (SECTIONS) UNIT 1

Designer J. Stapleton	Structure Numbers	F-16-NK	
Detailer R. Panning			
Drawing Number B-26	of 50	Drawings	

Revision Dates (Preliminary Stage Only)

COLORADO
DEPARTMENT OF HIGHWAYS
DIVISION OF HIGHWAYS:
FORM NO. 1261
1984

AS CONSTRUCTED			
NO REVISIONS 9/30/87	REVISED	VOID	

FED. ROAD REGION	DIVISION	PROJ. NO.	SHEET NO.	SHEET TOTALS
VIII	COLO.	IR25-2(187)	118	~~120~~ 177

REVISIONS

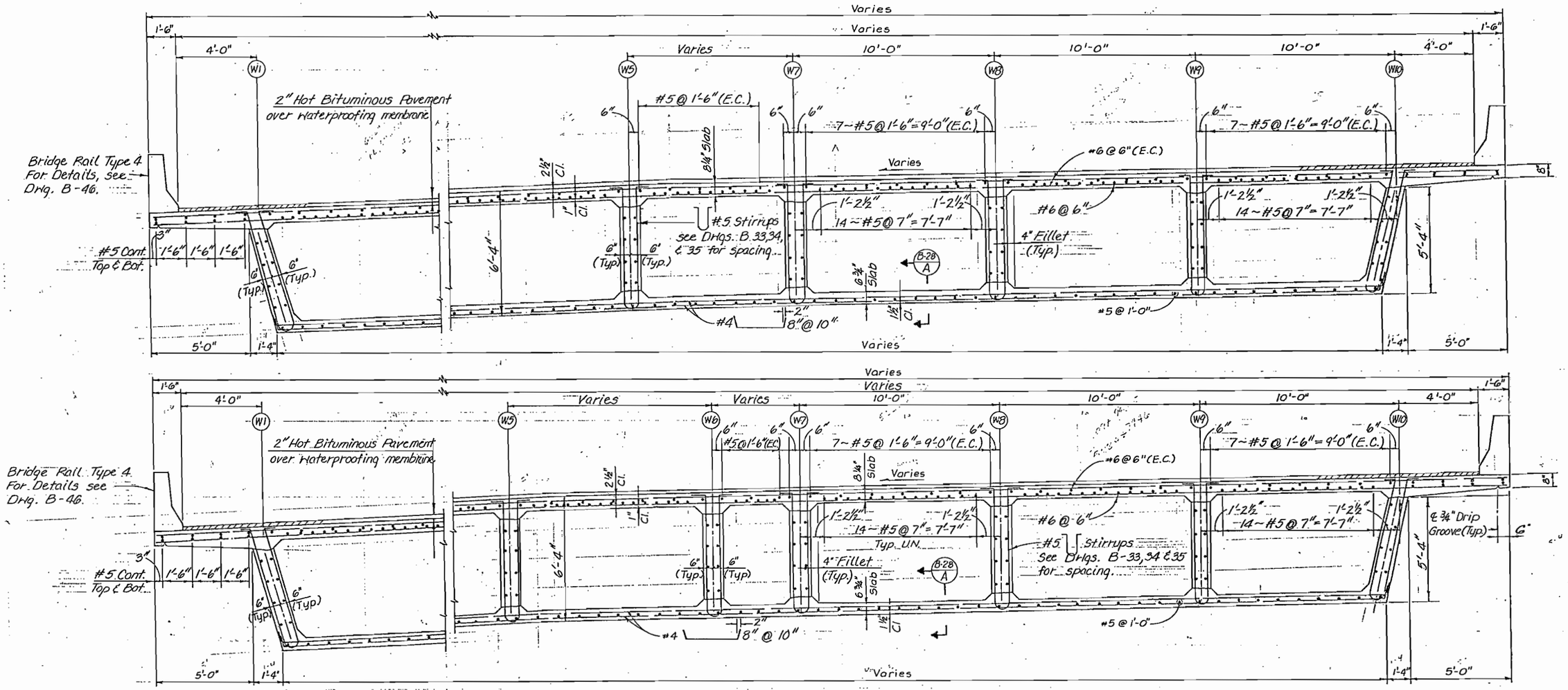

TYPICAL SECTIONS — SPAN 3

NOTES:

1. All Interior Webs to be Constructed Vertical.

De Leuw, Cather & Company Denver, CO.

DIVISION OF HIGHWAYS

SUPERSTRUCTURE DETAILS (SECTIONS) UNIT 1

Designer	J. Stapleton	Structure Numbers	F-16-NK
Detailer	R. Panning		
Drawing Number B-27	of 50	Drawings	

Revision Dates (Preliminary Stage Only)

	INITIAL	DAT
DESIGNED BY	J.L.S.	9-85
CHECKED BY		
DETAILED BY	R.S.P.	9-85
CHECKED BY		
QUANTITIES BY	J.L.S.	10-85
CHECKED BY	R.M.H.	11-85

COLORADO
PARTMENT OF HIGHWAYS
OF HIGHWAYS:
FORM NO. 126:
1. 1984

AS CONSTRUCTED			
NO REVISIONS 7/30/87	REVISED		VOID

FED.ROAD REGION	DIVISION	PROJ. NO.	SHEET NO.	SHEET TOTALS
VIII	COLO.	IR 25-2(187)	119	~~170~~ 177

REVISIONS

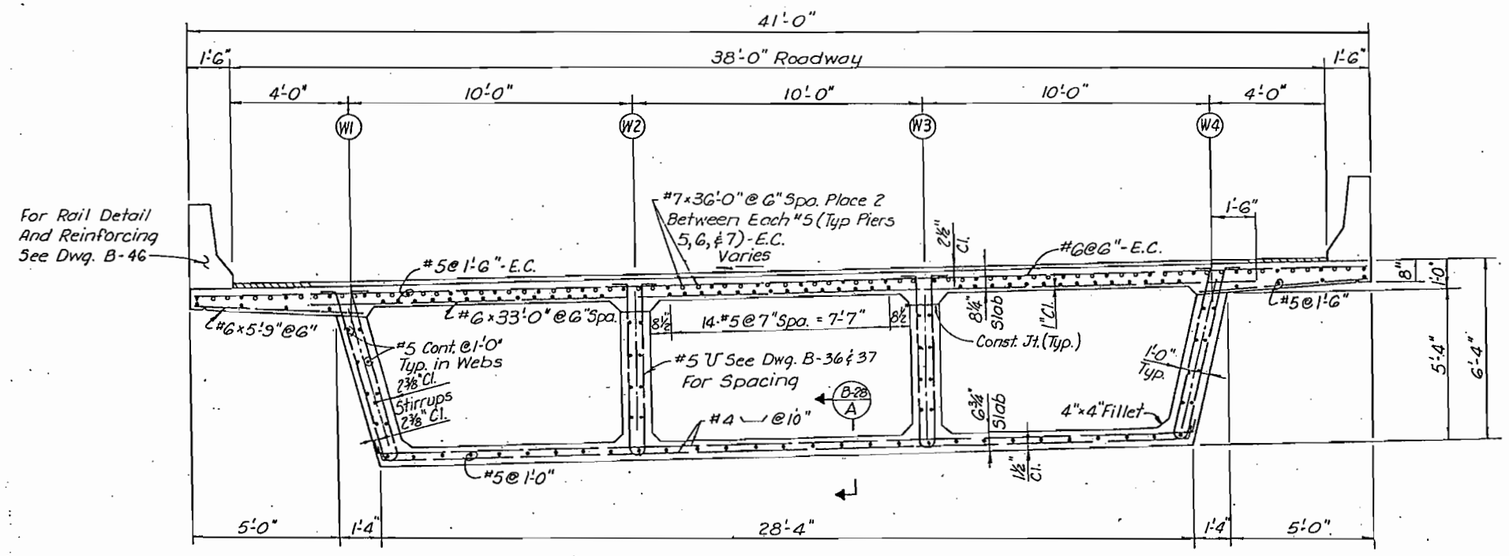

TYPICAL SECTION - SPANS 5,6,& 7

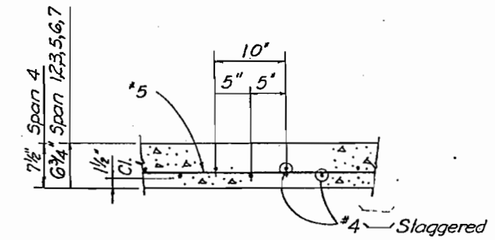

SECTION B-26 A B-27 A B-28 A

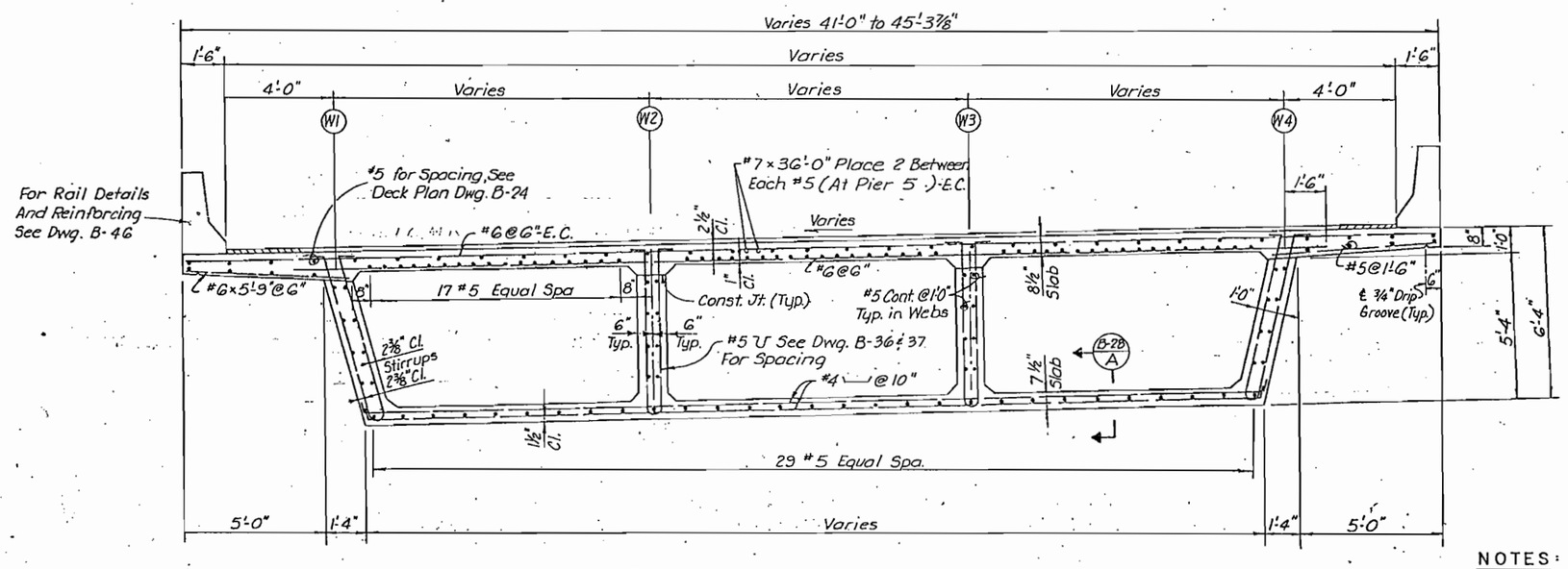

TYPICAL SECTION - SPAN 4

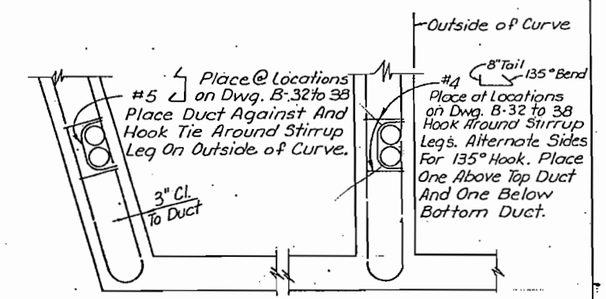

TENDON PLACEMENT DETAIL

NOTES:

1. All Interior Webs to be Constructed Vertical.

INITIAL			
DESIGNED BY	M.R.M.	CHECKED BY	M.R.M. 10-85
CHECKED BY	R.M.H.	QUANTITIES BY	R.M.H. 11-85
DETAILED BY	R.M.H.	CHECKED BY	

De Leuw, Cather & Company Denver, CO.

DIVISION OF HIGHWAYS

SUPERSTRUCTURE DETAILS (SECTIONS) UNIT 2

Designer M. Merklinger		Structure Numbers	F-16-NK
Detailer R. Hinshaw			F-16-OE
Drawing Number B-28	of 50	Drawings	

Revision Dates (Preliminary Stage Only)

COLORADO
ARTMENT OF HIGHWAYS
OF HIGHWAYS:
FORM NO. 126:
. 1984

AS CONSTRUCTED			
NO REVISIONS 9/30/87	REVISED		VOID

FED. ROAD REGION	DIVISION	PROJ. NO.	SHEET NO.	SHEET TOTALS
VIII	COLO.	IR 25-2(187)	120	179

REVISIONS

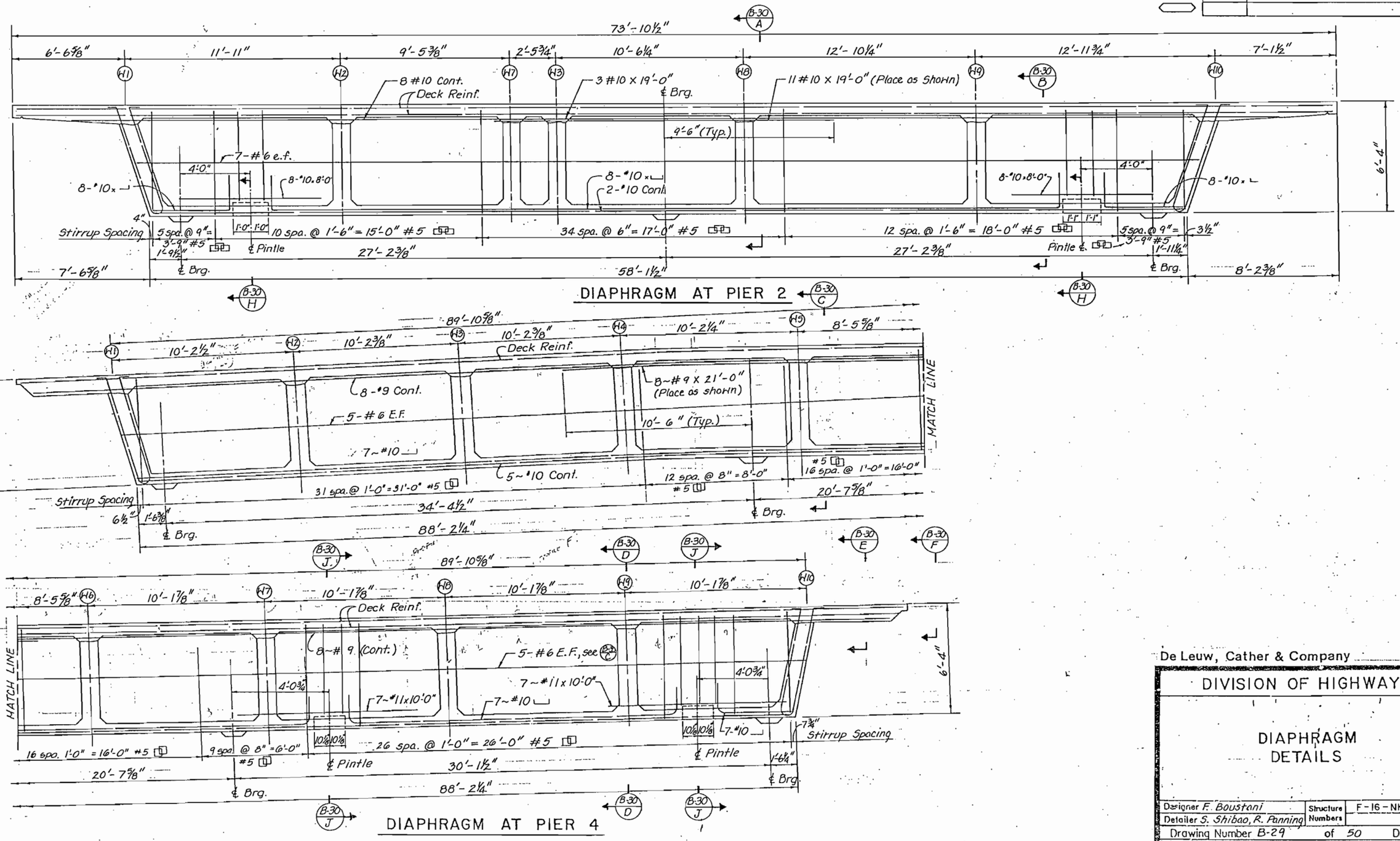

INITIAL	
DESIGNED BY	F.E.B.
CHECKED BY	Y.K.
DETAILED BY	S.Y.S.

CHECKED BY	J.L.S.	11-85
	F.E.B.	9-85
QUANTITIES BY	R.M.H.	11-85
DIVISION TR	Y.K.	1-86

De Leuw, Cather & Company Denver, CO.

DIVISION OF HIGHWAYS

DIAPHRAGM DETAILS

Designer F. Boustani
Detailer S. Shibao, R. Panning
Structure Numbers F-16-NK
Drawing Number B-29 of 50 Drawings

Revision Dates (Preliminary Stage Only)

TE OF COLORADO
TE DEPARTMENT OF HIGHWAYS
ISION OF HIGHWAYS:
D. H. FORM NO.126:
. FEB. 1984

AS CONSTRUCTED			
NO REVISIONS 7/30/87	REVISED		VOID

FED.ROAD REGION	DIVISION	PROJ. NO.	SHEET NO.	SHEET TOTALS
VIII	COLO.	IR25-2(187)	121	~~170~~ 177

REVISIONS		

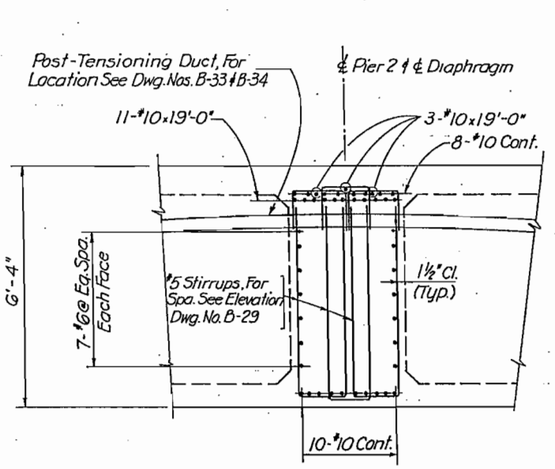

SECTION B-29 A

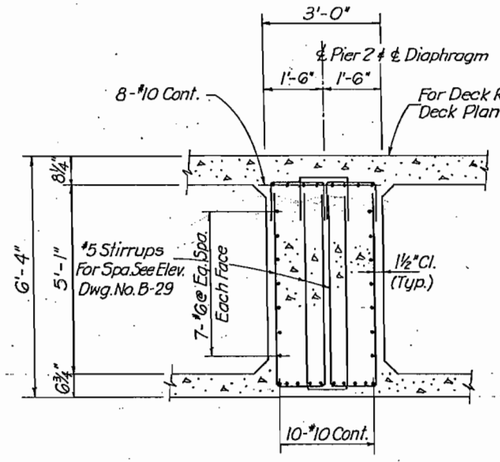

SECTION B-29 B

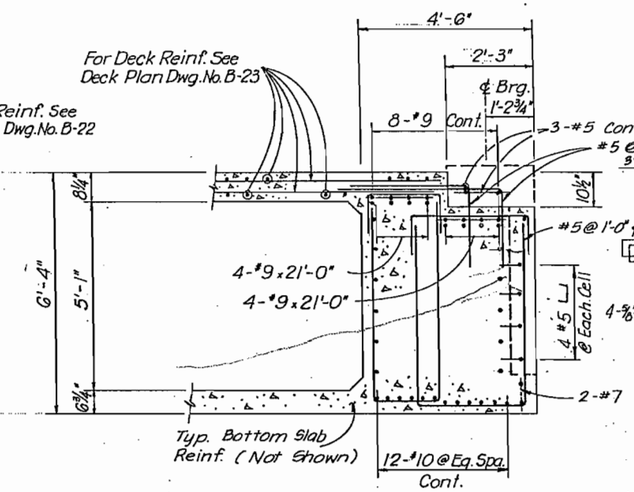

SECTION B-29 C

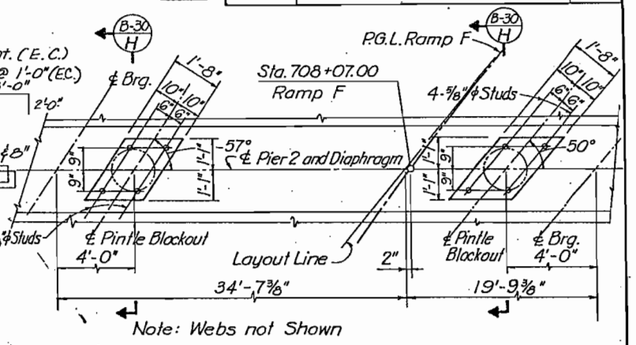

PINTLE SLOT DETAIL PIER 2

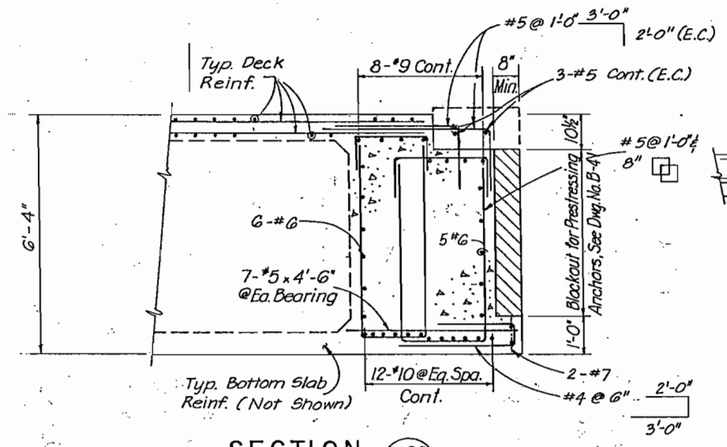

SECTION B-29 D

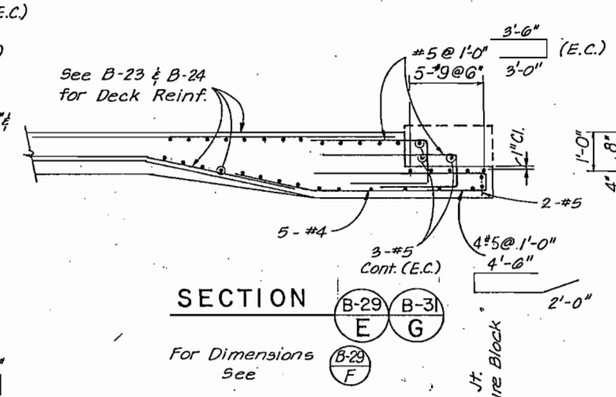

SECTION B-29 E B-31 G

For Dimensions See B-29 F

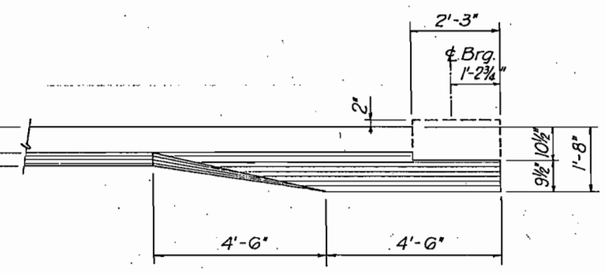

ELEVATION B-29 F

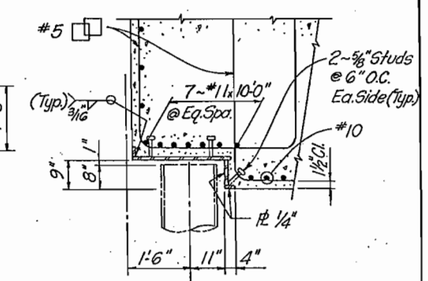

SECTION B-29 B-30 J J

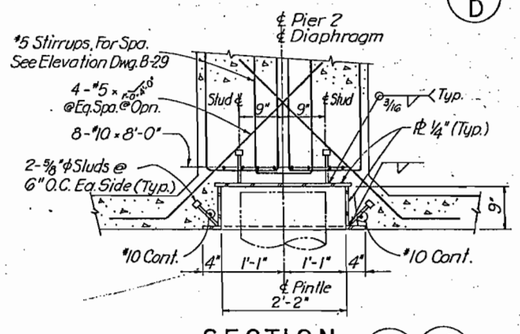

SECTION B-30 H B-29 H

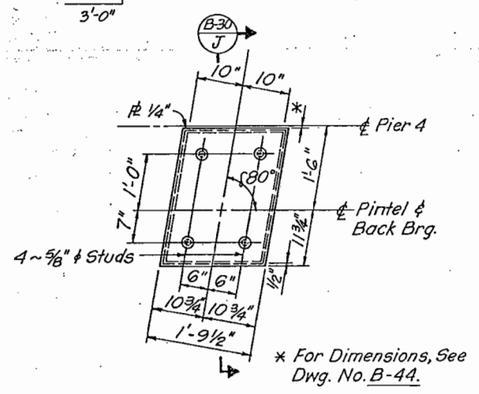

* For Dimensions, See Dwg. No. B-44.

PINTLE SLOT DETAIL 4

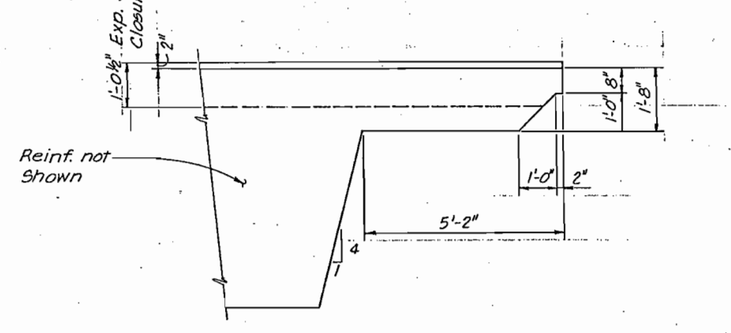

OVERHANG DETAIL

(FOR EXPANSION JOINT AREA)

	INITIAL	DATE		INITIAL	DATE
DESIGNED BY	J. L. S.	10-85	CHECKED BY	J. L. S.	10-85
CHECKED BY	M. R. M.	12-85	QUANTITIES BY	R. M. H.	11-85
DETAILED BY	V. V. V.	10-85	CHECKED BY	Y. K.	1-86

De Leuw, Cather & Company Denver, CO.

DIVISION OF HIGHWAYS

DIAPHRAGM SECTIONS

Designer J. Stapleton		Structure Numbers	F-16-NK
Detailer V. Villao, R. Panning			F-16-OE
Drawing Number B-30	of 50	Drawings	

Revision Dates (Preliminary Stage Only)

TE OF COLORADO
E DEPARTMENT OF HIGHWAYS
SION OF HIGHWAYS:
). H. FORM NO. 126:
. FEB. 1984

AS CONSTRUCTED			
NO REVISIONS 9/30/87	REVISED		VOID

FED. ROAD REGION	DIVISION	PROJ. NO.	SHEET NO.	SHEET TOTALS
VIII	COLO.	IR25-2(187)	122	122

REVISIONS

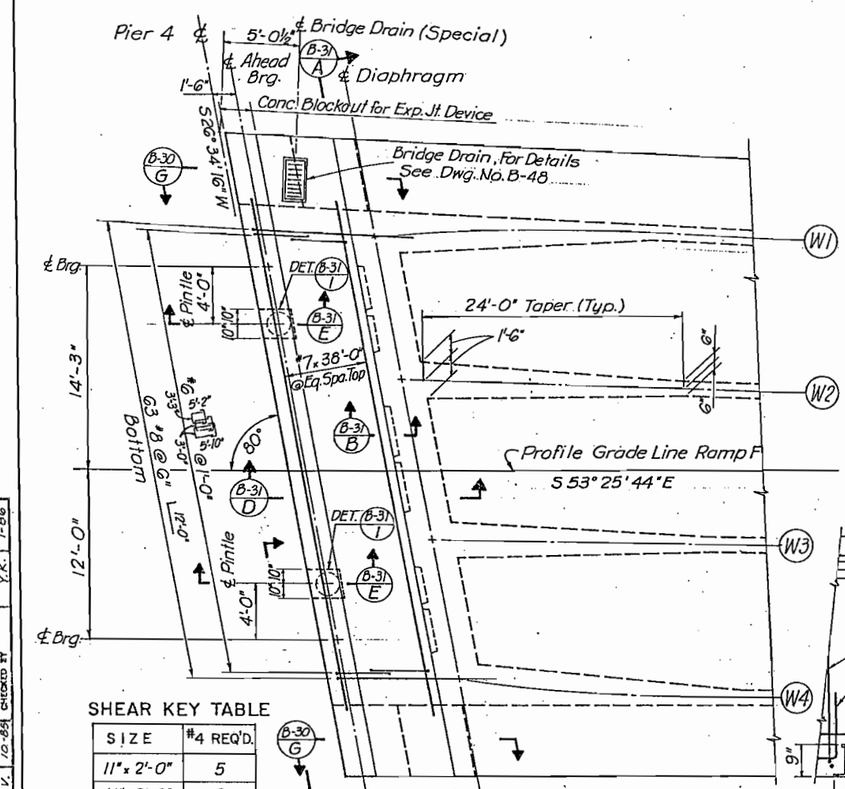

SHEAR KEY TABLE

SIZE	#4 REQ'D.
11" x 2'-0"	5
11" x 2'-6"	6
11" x 3'-0"	7
11" x 3'-6"	8

PARTIAL PLAN - SPAN 4

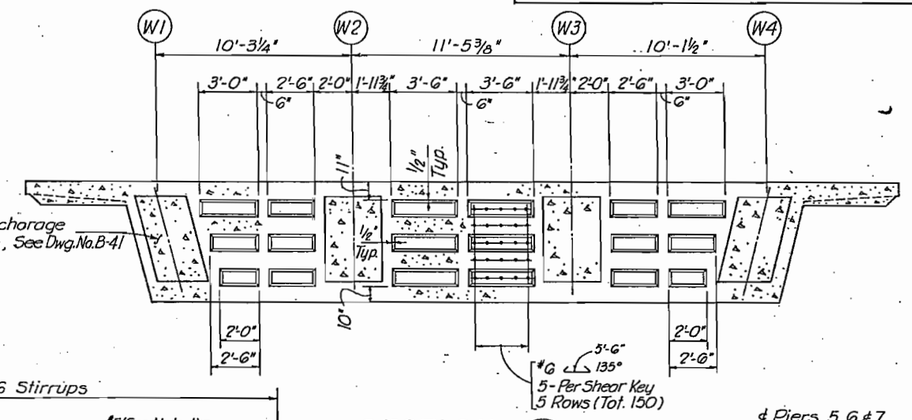

SECTION B-31 A

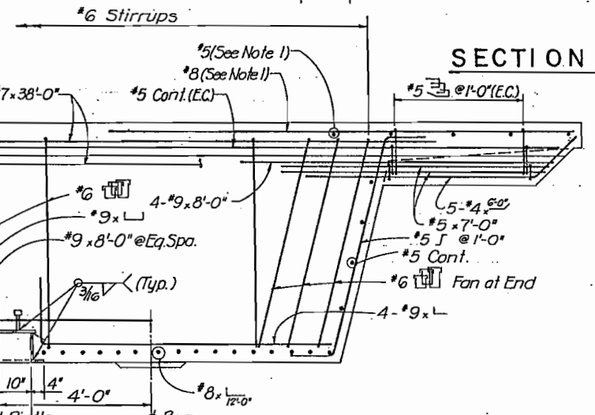

SECTION B-31 C

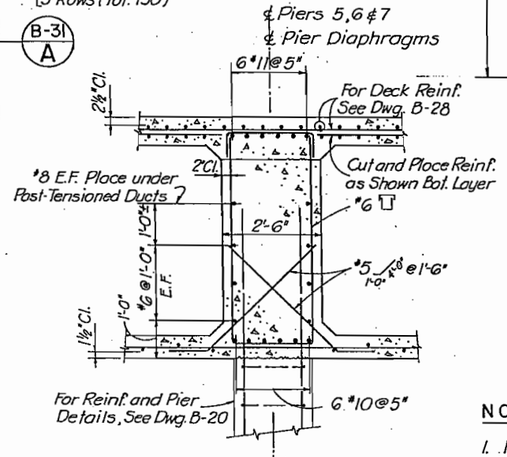

SECTION B-31 F

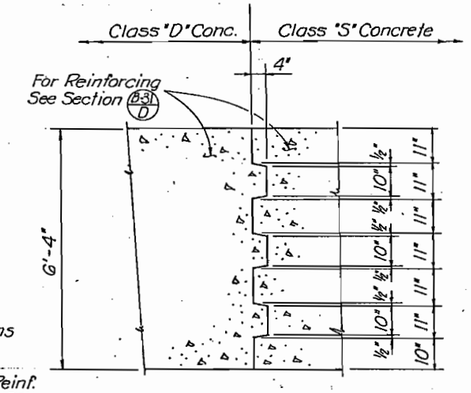

SECTION B-31 B

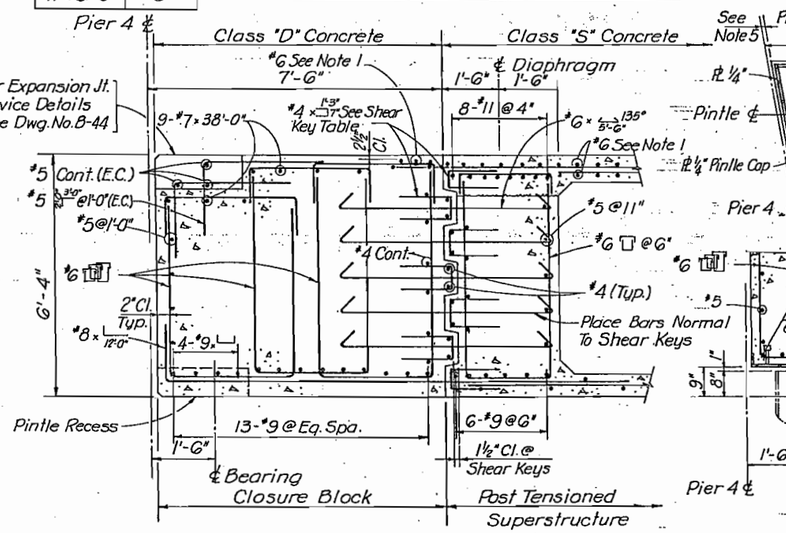

SECTION B-31 D

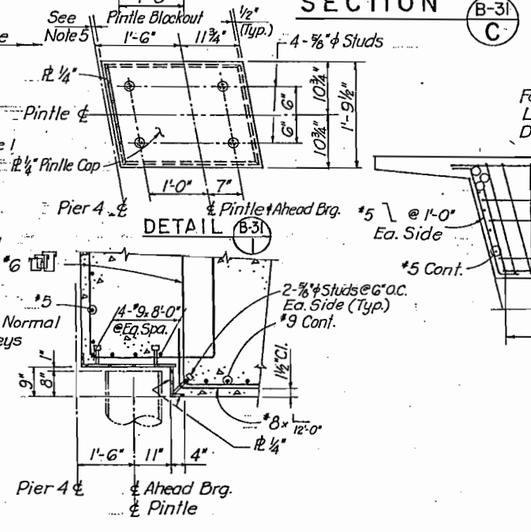

DETAIL B-31 I

SECTION B-31 E

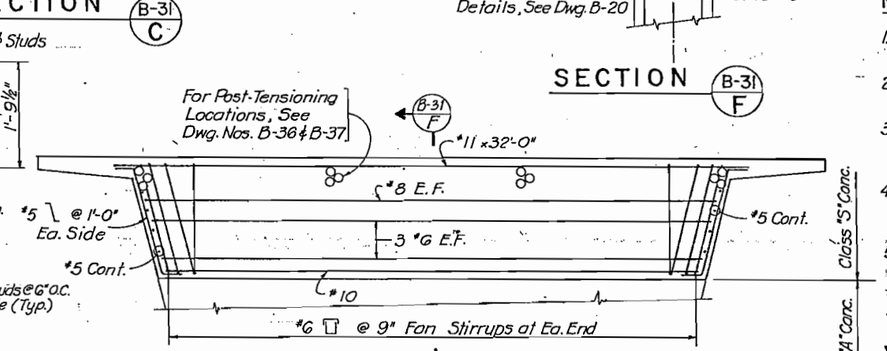

DIAPHRAGM ELEVATION
PIERS 5, 6 & 7

NOTES:

1. For Deck Reinforcing and Additional Information See Deck Plan Dwg. No. B-24.
2. The Closure Block shall not be Constructed until all Post-Tensioning and Grouting have been completed.
3. The superstructure of Span 4 through 7 shall be adequately supported until the Closure Block concrete reaches a minimum Compressive Strength of f'_c = 4500 psi.
4. Temporary support is required at ℄ of diaphragm to support a downward vertical load of 642 kips. See Construction Layout and Piling Layout Dwg. No. B-10.
5. For Dimension, See Dwg. No. B-44.

INITIAL	DATE	CHECKED BY		QUANTITIES BY		CHECKED BY	
M.R.M.	10-85	M.R.M.	10-85	R.M.H.	11-86	Y.K.	1-86
J.L.S.	12-85						
V.V.	10-85						

DESIGNED BY
CHECKED BY
DETAILED BY

De Leuw, Cather & Company — Denver, CO.

DIVISION OF HIGHWAYS

SUPERSTRUCTURE DETAILS

Designer M. Merklinger		Structure Numbers	F-16-0E
Detailer V. Villao			
Drawing Number B-31	of 50	Drawings	

Revision Dates (Preliminary Stage Only)

OF COLORADO
DEPARTMENT OF HIGHWAYS
ION OF HIGHWAYS:
H. FORM NO. 126:
FEB. 1984

AS CONSTRUCTED		
NO REVISIONS 7/30/87	REVISED	VOID

FED. ROAD REGION	DIVISION	PROJ. NO.	SHEET NO.	SHEET TOTALS
VIII	COLO.	IR25-2(187)	123	~~170~~ 177

REVISIONS

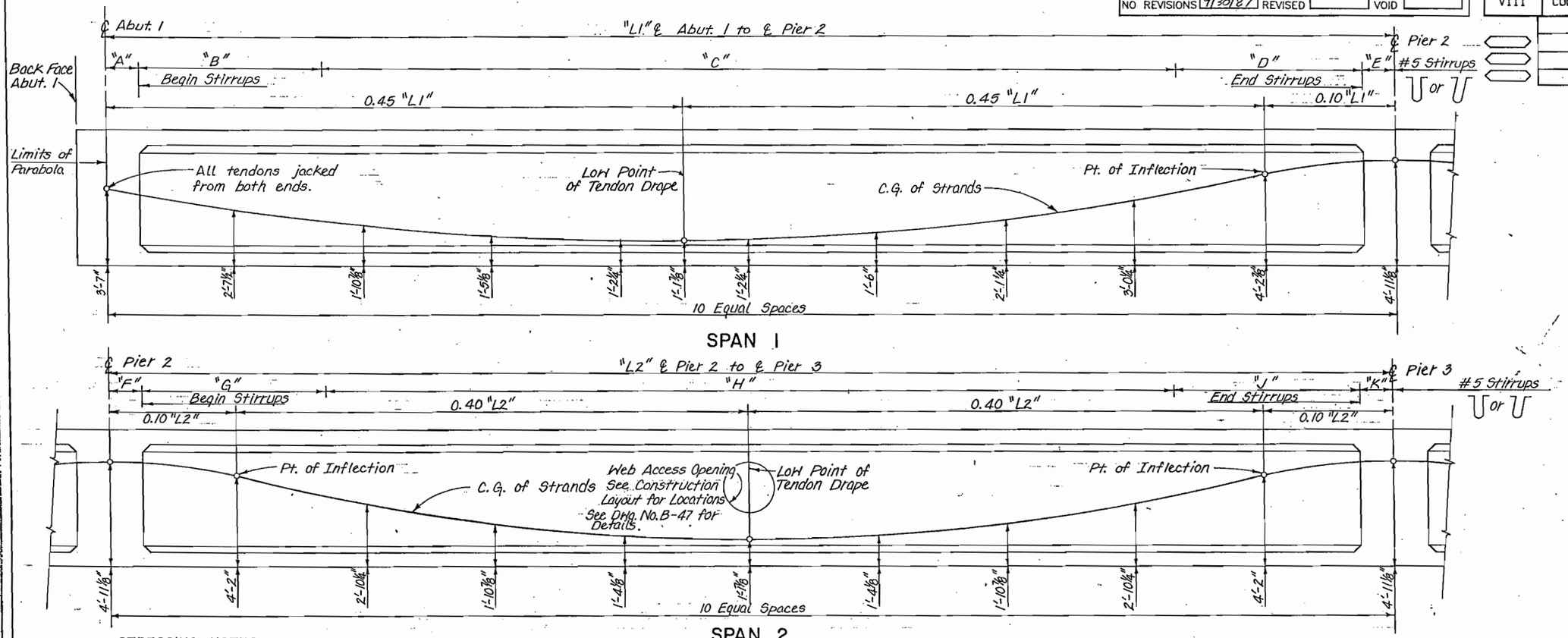

WEB ELEVATION — UNIT ① WEBS 1-3, 8-10

STRESSING NOTES

JACKING FORCE:

PJACK = PRESTRESS FORCE AT JACKING ENDS. SEE TABLE, DRAWING NUMBER B-33, FOR JACKING FORCES IN EACH WEB.

$$As = \frac{PJACK}{0.75f's}$$

f's = 270,000 psi

CONCRETE:

f'c = 5,000 psi AT 28 DAYS

f'ci = 4,000 psi AT TIME OF STRESSING

GENERAL:

DESIGN IS BASED ON RIGID, GALVANIZED PRESTRESSING DUCTS WITH A FRICTION CURVATURE COEFFICIENT u = 0.25, AND A FRICTION WOBBLE COEFFICIENT k = 0.0002 MODIFIED IN EACH SPAN FOR HORIZONTAL CURVATURE. SEE TABLE, DRAWING NUMBER B-33, FOR MODIFIED k' VALUES USED. CONTRACTOR TO SUBMIT ELONGATION AND JACKING CALCULATIONS BASED ON THESE VALUES.

PJACK SPECIFIED AT THE JACKING END INCLUDES FRICTION LOSSES AND PROVISIONS FOR AN ADDITIONAL 33.0 ksi LOSS IN STRESS.

TENDONS TO BE JACKED TO 0.75 f's AND ANCHORED AT AN EQUIVALENT ANCHOR SET = 5/8". ALL TENDONS SHOWN ON THIS DRAWING TO BE JACKED FROM BOTH ENDS.

PRESTRESSING STEEL SHALL BE UNCOATED SEVEN-WIRE STRESS-RELIEVED STRAND, AASHTO M 203, GRADE 270, 1/2" NOMINAL DIAMETER.

WEB REINFORCING DATA - SPAN 1

WEB NO.	"A"	"B"	"C"	"D"	"E"
W1	1'-10"	18 Spa. @ 1'-0" = 18'-0"	39 Spa. @ 2'-0" = 78'-0"	36 Spa. @ 6" = 18'-0"	2'-3 1/8"
W2	1'-8 3/8"	18 Spa. @ 1'-0" = 18'-0"	39 Spa. @ 2'-0" = 78'-0"	25 Spa. @ 9" = 18'-9"	2'-1 3/8"
W3	1'-9 5/8"	18 Spa. @ 1'-0" = 18'-0"	39 Spa. @ 2'-0" = 78'-0"	38 Spa. @ 6" = 19'-0"	2'-2 1/2"
W8	1'-8 1/8"	18 Spa. @ 1'-0" = 18'-0"	40 Spa. @ 2'-0" = 80'-0"	38 Spa. @ 6" = 19'-0"	2'-2 1/2"
W9	1'-7 7/8"	18 Spa. @ 1'-0" = 18'-0"	41 Spa. @ 2'-0" = 82'-0"	36 Spa. @ 6" = 18'-0"	2'-2 3/8"
W10	1'-8"	18 Spa. @ 1'-0" = 18'-0"	41 Spa. @ 2'-0" = 82'-0"	38 Spa. @ 6" = 19'-0"	2'-2 5/8"

WEB REINFORCING DATA - SPAN 2

WEB NO.	"F"	"G"	"H"	"J"	"K"
W1	2'-1"	25 Spa. @ 9" = 18'-9"	38 Spa. @ 2'-0" = 76'-0"	38 Spa. @ 6" = 19'-0"	2'-1 1/8"
W2	2'-1"	25 Spa. @ 9" = 18'-9"	38 Spa. @ 2'-0" = 76'-0"	38 Spa. @ 6" = 19'-0"	2'-1 1/8"
W3	2'-1"	38 Spa. @ 6" = 19'-0"	38 Spa. @ 2'-0" = 76'-0"	25 Spa. @ 9" = 18'-9"	2'-1 1/8"
W8	2'-2 7/8"	39 Spa. @ 6" = 19'-6"	43 Spa. @ 2'-0" = 86'-0"	24 Spa. @ 9" = 18'-0"	2'-3 1/8"
W9	2'-3 3/8"	39 Spa. @ 6" = 19'-6"	43 Spa. @ 2'-0" = 86'-0"	24 Spa. @ 9" = 18'-0"	2'-3 3/8"
W10	2'-3 1/4"	39 Spa. @ 6" = 19'-6"	43 Spa. @ 2'-0" = 86'-0"	24 Spa. @ 9" = 18'-0"	2'-3 1/4"

NOTES

AT THE CONTRACTOR'S OPTION, LOW-RELAXATION PRESTRESSING STRANDS MAY BE SUBSTITUTED FOR THE STRESS RELIEVED PRESTRESSING STRANDS SHOWN IN UNIT 1, PROVIDED REDESIGN CALCULATIIONS FOR ELONGATION AND JACKING ARE SUBMITTED TO THE ENGINEER FOR APPROVAL.

	INITIAL	DATE	CHECKED BY	DATE
DESIGNED BY	F.E.B.	9-85	J.L.S.	10-85
CHECKED BY	E.L.B.	9-85	F.E.B.	9-85
DETAILED BY	S.Y.S.	9-85	R.M.H.	11-85
			QUANTITIES BY	
			CHECKED BY	

De Leuw, Cather & Company Denver, CO

DIVISION OF HIGHWAYS

SUPERSTRUCTURE DETAILS UNIT ①

Designer F. Boustani
Detailer S. Shibao
Structure Numbers F-16-NK
Drawing Number B-32 of 50 Drawings

Revision Dates (Preliminary Stage Only)

E OF COLORADO
E DEPARTMENT OF HIGHWAYS
SION OF HIGHWAYS:
). H. FORM NO.126:
. FEB. 1984

AS CONSTRUCTED		
NO REVISIONS 9/30/87	REVISED	VOID

FED.ROAD REGION	DIVISION	PROJ. NO.	SHEET NO.	SHEET TOTALS
VIII	COLO.	IR25-2(187)	124	777

REVISIONS

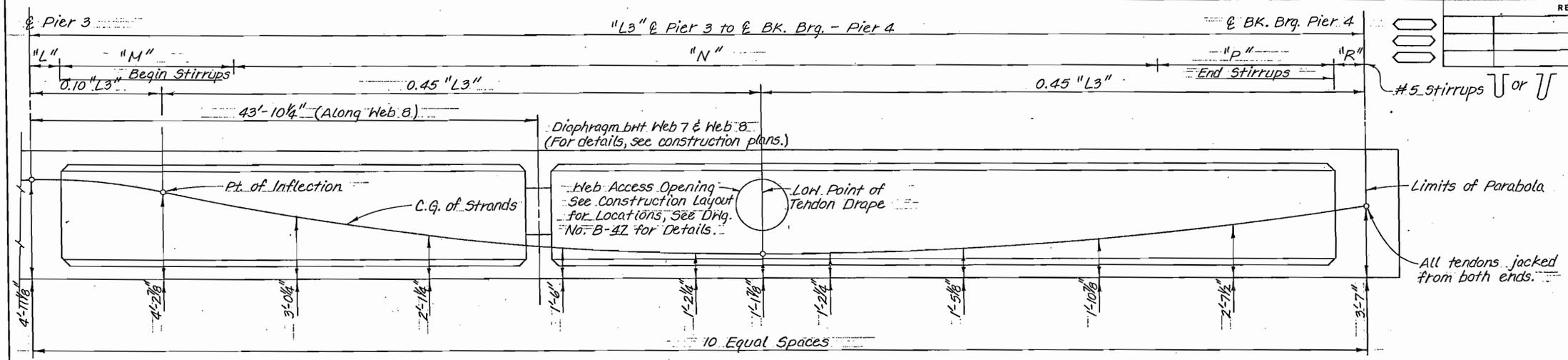

SPAN 3
WEB ELEVATION ~ UNIT ① WEBS 1-3, 8-10

INITIAL	DATE	CHECKED BY		
F.E.B.	9-86	F.E.B.	9-86	
J.L.S.	10-86	QUANTITIES BY		
R.M.H.	11-86	CHECKED BY		
DESIGNED BY	F.E.B.			
CHECKED BY	J.L.S.			
DETAILED BY	R.M.H.			

STRESSING NOTES

JACKING FORCE:

PJACK = PRESTRESS FORCE AT JACKING ENDS. SEE TABLE FOR JACKING FORCES IN EACH WEB.

$$As = \frac{PJACK}{0.75f's}$$

f's = 270,000 psi

CONCRETE:

f'c = 5,000 psi AT 28 DAYS

f'ci = 4,000 psi AT TIME OF STRESSING

GENERAL:

DESIGN IS BASED ON RIGID, GALVANIZED PRESTRESSING DUCTS WITH A FRICTION CURVATURE COEFFICIENT u = 0.25, AND A FRICTION WOBBLE COEFFICIENT k = 0.0002 MODIFIED IN EACH SPAN FOR HORIZONTAL CURVATURE. SEE TABLE FOR MODIFIED k' VALUES USED. CONTRACTOR TO SUBMIT ELONGATION AND JACKING CALCULATIONS BASED ON THESE VALUES.

PJACK SPECIFIED AT THE JACKING END INCLUDES FRICTION LOSSES AND PROVISIONS FOR AN ADDITIONAL 33.0 ksi LOSS IN STRESS.

TENDONS TO BE JACKED TO 0.75 f's AND ANCHORED AT AN EQUIVALENT ANCHOR SET = 5/8". ALL TENDONS SHOWN ON THIS DRAWING TO BE JACKED FROM BOTH ENDS.

PRESTRESSING STEEL SHALL BE UNCOATED SEVEN-WIRE STRESS-RELIEVED STRAND, AASHTO M 203, GRADE 270, 1/2" NOMINAL DIAMETER.

STRESSING TABLE:

WEB NO.	"L1" (FEET)	"L2" (FEET)	"L3" (FEET)	PJACK (KIPS)
W1	118'-1 1/8" (k' = 0.0006)	117'-11 1/8" (k' = 0.0002)	135'-9 5/8" (k' = 0.0007)	2,294
W2	118'-6 3/4" (k' = 0.0006)	117'-11 1/8" (k' = 0.0002)	129'-9 5/8" (k' = 0.0007)	2,294
W3	119'-0 1/8" (k' = 0.0005)	117'-11 1/8" (k' = 0.0002)	123'-9 5/8" (k' = 0.0007)	2,232
W8	120'-10 5/8" (k' = 0.0007)	128'-0" (k' = 0.0002)	111'-0 7/8" (k' = 0.0002)	2,170
W9	121'-10 1/4" (k' = 0.0007)	128'-0 3/4" (k' = 0.0002)	104'-6 1/4" (k' = 0.0002)	2,170
W10	122'-10 5/8" (k' = 0.0007)	128'-0 1/2" (k' = 0.0002)	97'-11 1/2" (k' = 0.0002)	2,170

WEB REINFORCING DATA - SPAN 3

WEB NO.	"L"	"M"	"N"	"P"	"R"
W1	2'-2 5/8"	35 Spa. @ 6" = 17'-6"	48 Spa. @ 2'-0" = 96'-0"	18 Spa. @ 1'-0" = 18'-0"	2'-1"
W2	2'-2 3/4"	35 Spa. @ 6" = 17'-6"	45 Spa. @ 2'-0" = 90'-0"	18 Spa. @ 1'-0" = 18'-0"	2'-0 7/8"
W3	2'-2 3/4"	26 Spa. @ 9" = 19'-6"	41 Spa. @ 2'-0" = 82'-0"	24 Spa. @ 9" = 18'-0"	2'-0 7/8"
W8	2'-2 1/4"	24 Spa. @ 9" = 18'-0"	35 Spa. @ 2'-0" = 70'-0"	19 Spa. @ 1'-0" = 19'-0"	1'-10 5/8"
W9	2'-5"	24 Spa. @ 9" = 18'-0"	32 Spa. @ 2'-0" = 64'-0"	18 Spa. @ 1'-0" = 18'-0"	2'-1 1/4"
W10	2'-4 5/8"	39 Spa. @ 6" = 19'-6"	28 Spa. @ 2'-0" = 56'-0"	18 Spa. @ 1'-0" = 18'-0"	2'-0 7/8"

De Leuw, Cather & Company Denver, CO

DIVISION OF HIGHWAYS

SUPERSTRUCTURE
DETAILS
UNIT ①

Designer F. Boustani
Detailer S. Shibao
Structure Numbers F-16-NK
Drawing Number B-33 of 50 Drawings

Revision Dates (Preliminary Stage Only)

E OF COLORADO
E DEPARTMENT OF HIGHWAYS
SION OF HIGHWAYS
I. H. FORM NO.126
FEB. 1984

AS CONSTRUCTED			
NO REVISIONS	9/30/87	REVISED	VOID

FED.ROAD REGION	DIVISION	PROJ. NO.	SHEET NO.	SHEET TOTALS
VIII	COLO.	IR 25-2(187)	125	~~170~~ 177

REVISIONS

STRESSING NOTES

JACKING FORCE:

PJACK = 2,232 KIPS TOTAL AT JACKING END, WEB NUMBER W7.

$$As = \frac{PJACK}{0.75f's}$$

f's = 270,000 psi

CONCRETE:

f'c = 5,000 psi AT 28 DAYS

f'ci = 4,000 psi AT TIME OF STRESSING

GENERAL:

DESIGN IS BASED ON RIGID, GALVANIZED PRESTRESSING DUCTS WITH A FRICTION CURVATURE COEFFICIENT u = 0.25, AND A FRICTION WOBBLE COEFFICIENT k = 0.0002. CONTRACTOR TO SUBMIT ELONGATION AND JACKING CALCULATION BASED ON THESE VALUES.

PJACK SPECIFIED AT THE JACKING END INCLUDES FRICTION LOSSES AND PROVISIONS FOR AN ADDITIONAL 33.0 ksi LOSS IN STRESS.

TENDONS TO BE JACKED TO 0.75 f's AND ANCHORED AT AN EQUIVALENT ANCHOR SET = 5/8". ALL TENDONS SHOWN ON THIS DRAWING TO BE JACKED FROM PIER 4.

PRESTRESSING STEEL SHALL BE UNCOATED SEVEN-WIRE STRESS-RELIEVED STRAND, AASHTO M 203, GRADE 270, 1/2" NOMINAL DIAMETER.

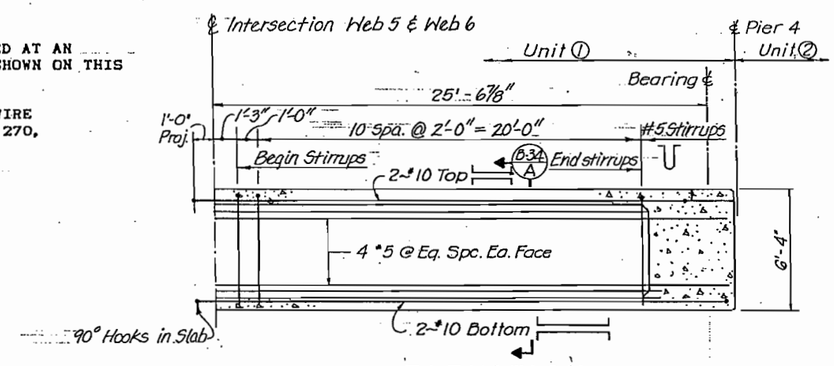

ELEVATION
UNIT ① WEB 6

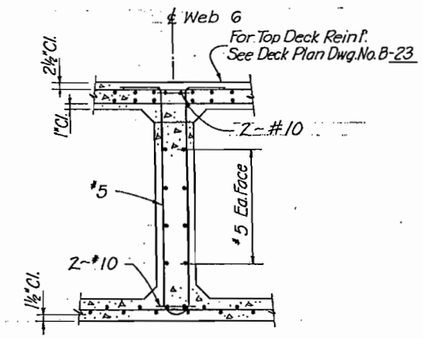

SECTION B-34 A

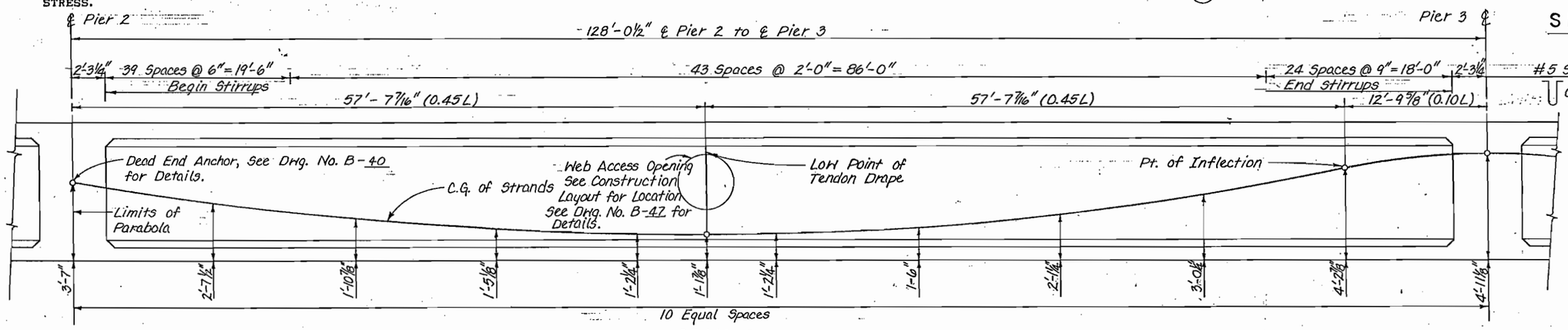

SPAN 2

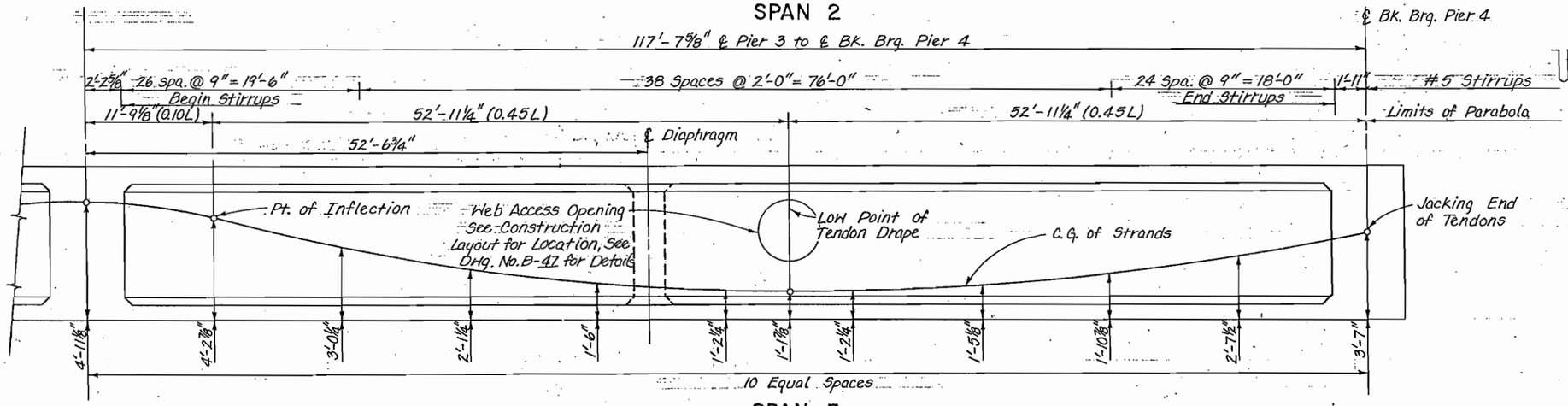

SPAN 3

WEB ELEVATION
UNIT ① WEB 7

INITIAL	DATE	CHECKED BY	QUANTITIES BY	CHECKED BY
F.E.B.	9-85	F.E.B.	F.E.B.	9-85
S.Y.S.	9-85	S.Y.S.	R.M.A.	10-85
				11-85

DESIGNED BY
CHECKED BY
DETAILED BY

De Leuw, Cather & Company — Denver, CO.

DIVISION OF HIGHWAYS

SUPERSTRUCTURE DETAILS
UNIT ①

Designer F. Boustani		Structure Numbers	F-16-NK
Detailer S. Shibao			
Drawing Number B-34	of 50		Drawings

Revision Dates (Preliminary Stage Only)

E OF COLORADO
E DEPARTMENT OF HIGHWAYS
SION OF HIGHWAYS:
). H. FORM NO.126:
. FEB. 1984

AS CONSTRUCTED			
NO REVISIONS 9/30/87	REVISED		VOID

FED.ROAD REGION	DIVISION	PROJ. NO.	SHEET NO.	SHEET TOTALS
VIII	COLO.	IR25-2(187)	126	~~178~~ 177

REVISIONS

STRESSING NOTES

JACKING FORCE:

PJACK = 2,232 KIPS TOTAL AT JACKING END, WEB NUMBER W4.
PJACK = 837 KIPS TOTAL AT JACKING END, WEB NUMBER W5.

$$A_s = \frac{PJACK}{0.75 f'_s}$$

f'_s = 270,000 psi

CONCRETE:

f'_c = 5,000 psi AT 28 DAYS

f'_{ci} = 4,000 psi AT TIME OF STRESSING

GENERAL:

DESIGN IS BASED ON RIGID, GALVANIZED PRESTRESSING DUCTS WITH A FRICTION CURVATURE COEFFICIENT u = 0.25, AND A FRICTION WOBBLE COEFFICIENT k = 0.0002 MODIFIED IN EACH SPAN FOR HORIZONTAL CURVATURE. A MODIFIED VALUE OF k' = 0.0008 USED FOR WEBS 4 AND 5. CONTRACTOR TO SUBMIT ELONGATION AND JACKING CALCULATIONS BASED ON THESE VALUES.

PJACK SPECIFIED AT THE JACKING END INCLUDES FRICTION LOSSES AND PROVISIONS FOR AN ADDITIONAL 33.0 ksi LOSS IN STRESS.

TENDONS TO BE JACKED TO 0.75 f's AND ANCHORED AT AN EQUIVALENT ANCHOR SET = 5/8". ALL TENDONS SHOWN ON THIS DRAWING TO BE JACKED FROM PIER 4.

PRESTRESSING STEEL SHALL BE UNCOATED SEVEN-WIRE STRESS-RELIEVED STRAND, AASHTO M 203, GRADE 270, 1/2" NOMINAL DIAMETER.

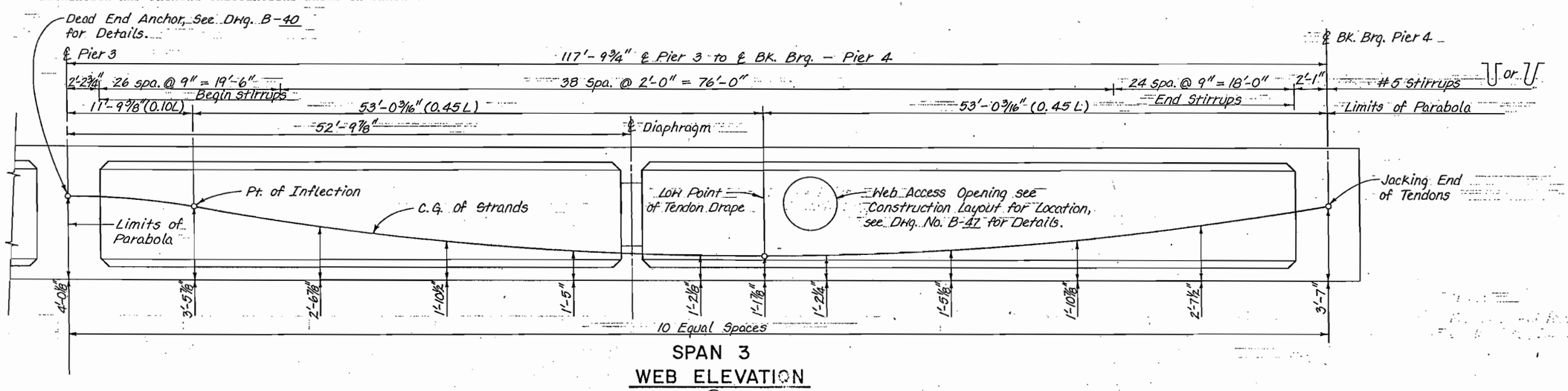

SPAN 3
WEB ELEVATION
UNIT 1 WEB 4

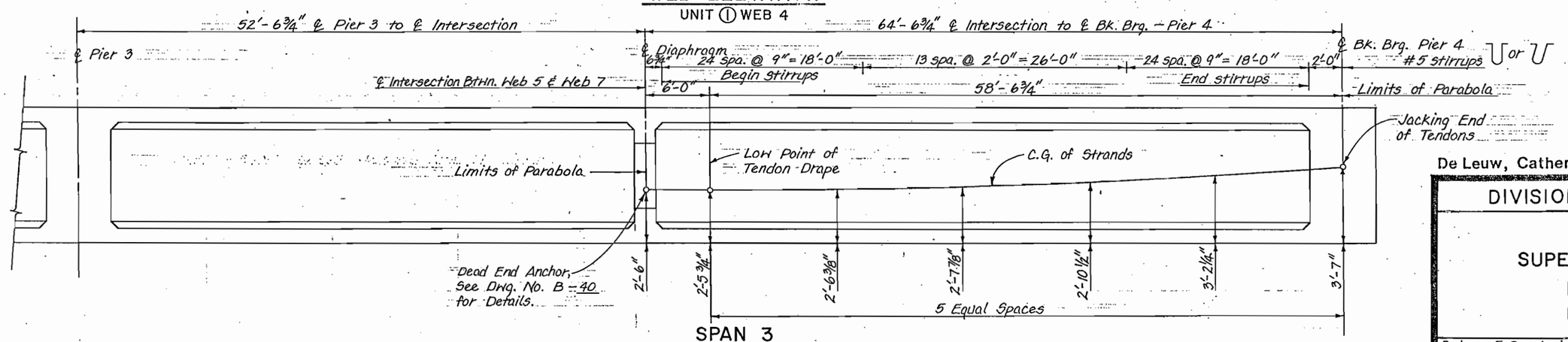

SPAN 3
WEB ELEVATION
UNIT 1 WEB 5

	INITIAL	DATE	CHECKED BY	DATE	CHECKED BY	DATE
DESIGNED BY	F.E.B.	9-85	F.E.B.	9-85	J.L.S.	10-85
CHECKED BY	S.Y.S.	9-85	QUANTITIES BY		R.M.H.	11-85
DETAILED BY			CHECKED BY			

De Leuw, Cather & Company Denver, CO.

DIVISION OF HIGHWAYS

SUPERSTRUCTURE DETAILS
UNIT 1

Designer F. Boustani		Structure Numbers	F-16-NK
Detailer S. Shibao			
Drawing Number B-35	of 50	Drawings	

Revision Dates (Preliminary Stage Only)

OF COLORADO
DEPARTMENT OF HIGHWAYS
SION OF HIGHWAYS:
.H. FORM NO.126:
FEB. 1984

AS CONSTRUCTED		
NO REVISIONS 9/30/87	REVISED	VOID

FED.ROAD REGION	DIVISION	PROJ. NO.	SHEET NO.	SHEET TOTALS
VIII	COLO.	IR 25-2(187)	127	170 / 177

REVISIONS

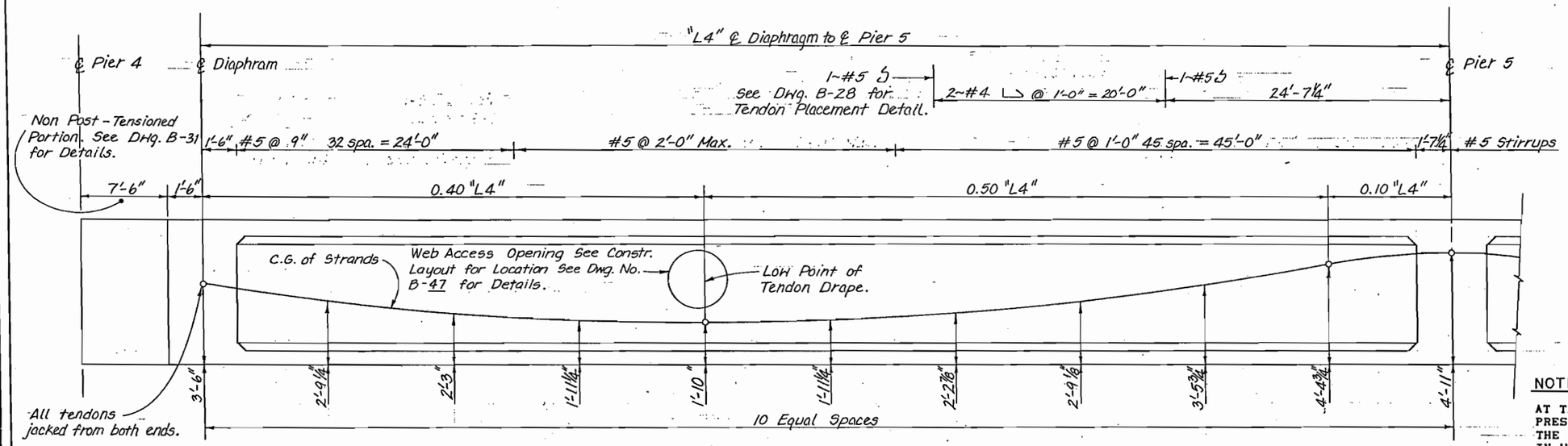

SPAN 4

NOTE

AT THE CONTRACTOR'S OPTION, LOW-RELAXATION PRESTRESSING STRANDS MAY BE SUBSTITUTED FOR THE STRESS RELIEVED PRESTRESSING STRANDS SHOWN IN UNIT 2, PROVIDED REDESIGN CALCULATIIONS FOR ELONGATION AND JACKING ARE SUBMITTED TO THE ENGINEER FOR APPROVAL.

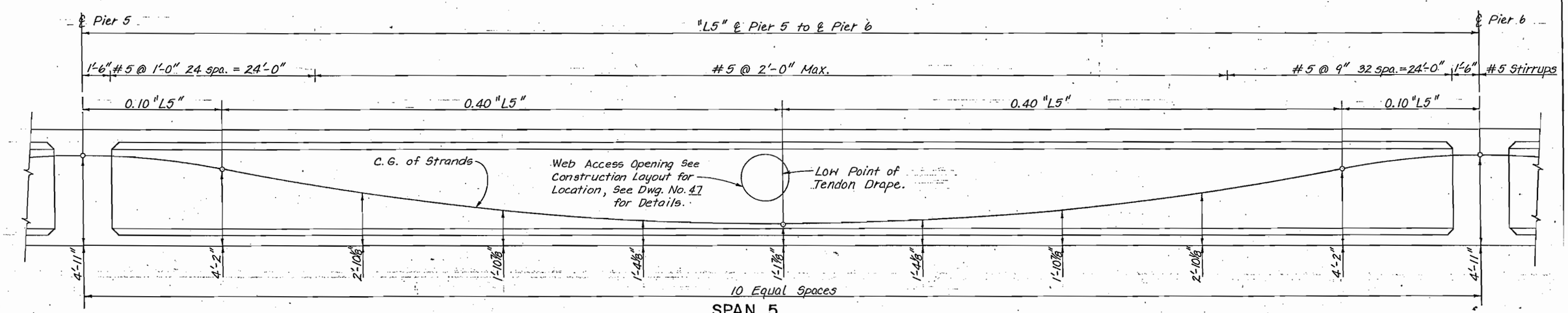

SPAN 5
WEB ELEVATION
UNIT ② ALL WEBS

STRESSING NOTES

JACKING FORCE:

PJACK = 11,153 KIPS TOTAL AT JACKING ENDS (PIER 4 AND ABUTMENT 8) AND SHALL BE EQUALLY PROPORTIONED IN THE FOUR WEBS.

$$A_s = \frac{P_{JACK}}{0.75 f'_s}$$

f'_s = 270,000 psi

CONCRETE:

f'_c = 5,000 psi AT 28 DAYS

f'_{ci} = 4,000 psi AT TIME OF STRESSING

GENERAL:

DESIGN IS BASED ON RIGID, GALVANIZED PRESTRESSING DUCTS WITH A FRICTION CURVATURE COEFFICIENT u = 0.25, AND A FRICTION WOBBLE COEFFICIENT k = 0.0002 MODIFIED IN EACH SPAN FOR HORIZONTAL CURVATURE. SEE TABLE FOR MODIFIED k' VALUES USED. CONTRACTOR TO SUBMIT ELONGATION AND JACKING CALCULATIONS BASED ON THESE VALUES.

PJACK SPECIFIED AT THE JACKING END INCLUDES FRICTION LOSSES AND PROVISIONS FOR AN ADDITIONAL 33.0 ksi LOSS IN STRESS.

TENDONS TO BE JACKED TO 0.75 f's AND ANCHORED AT AN EQUIVALENT ANCHOR SET = 5/8". ALL TENDONS SHOWN ON THIS DRAWING TO BE JACKED FROM BOTH ENDS.

PRESTRESSING STEEL SHALL BE UNCOATED SEVEN-WIRE STRESS-RELIEVED STRAND, AASHTO M 203, GRADE 270, 1/2" NOMINAL DIAMETER.

DIMENSION TABLE:

WEB NO.	"L4" (FEET)	"L5" (FEET)	"L6" (FEET)	"L7" (FEET)
W1	111'-2 1/4"	148'-8 5/8"	148'-0 7/8"	120'-0 1/4"
W2	109'-0 7/8"	149'-7 5/8"	149'-5 3/8"	120'-10 1/2"
W3	107'-0 5/8"	150'-6 5/8"	150'-9 7/8"	121'-9 5/8"
W4	105'-1 1/2"	151'-5 5/8"	152'-2 1/2"	122'-9 1/2"

TABLE FOR MODIFIED FRICTION WOBBLE COEFFICIENT:

SPAN 4	SPAN 5	SPAN 6	SPAN 7
(k' = 0.0003)	(k' = 0.0004)	(k' = 0.0004)	(k' = 0.0004)

INITIAL	DATE	CHECKED BY	H.R.M.	10-85
H.R.M.	9-85	QUANTITIES BY	R.M.H.	11-85
S.Y.S.	9-85	CHECKED BY		
DESIGNED BY	CHECKED BY	DETAILED BY		

De Leuw, Cather & Company Denver, CO.

DIVISION OF HIGHWAYS

SUPERSTRUCTURE DETAILS UNIT ②

Designer M. Merklinger | Structure Numbers F-16-OE
Detailer S. Shibao
Drawing Number B-36 of 50 Drawings

Revision Dates (Preliminary Stage Only)

E OF COLORADO
E DEPARTMENT OF HIGHWAYS
SION OF HIGHWAYS:
). H. FORM NO.126:
. FEB. 1984

AS CONSTRUCTED			
NO REVISIONS 9/30/87	REVISED		VOID

FED.ROAD REGION	DIVISION	PROJ. NO.	SHEET NO.	SHEET TOTALS
VIII	COLO.	IR 25-2(187)	128	177

REVISIONS

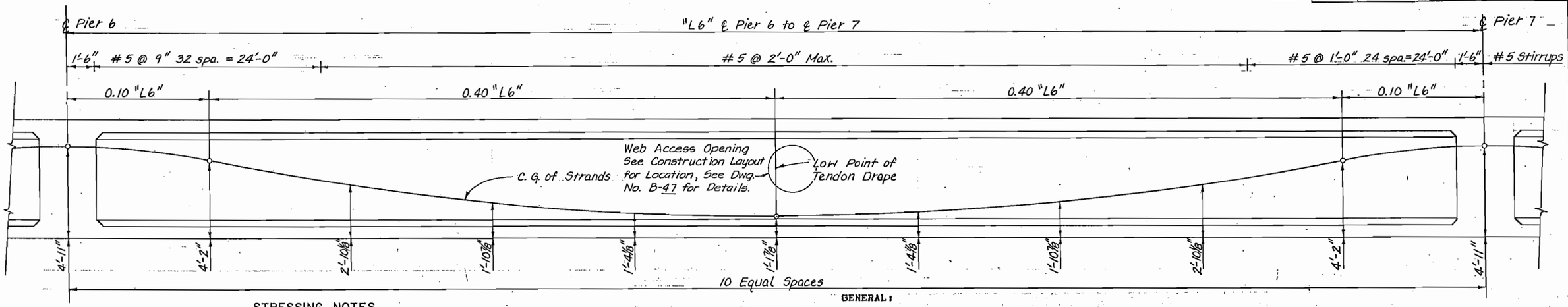

STRESSING NOTES

JACKING FORCE:

PJACK = 11,153 KIPS TOTAL AT JACKING ENDS (PIER 4 AND ABUTMENT 8) AND SHALL BE EQUALLY PROPORTIONED IN THE FOUR WEBS.

$$As = \frac{PJACK}{0.75f's}$$

f's = 270,000 psi

CONCRETE:

f'c = 5,000 psi AT 28 DAYS

f'ci = 4,000 psi AT TIME OF STRESSING

SPAN 6

GENERAL:

DESIGN IS BASED ON RIGID, GALVANIZED PRESTRESSING DUCTS WITH A FRICTION CURVATURE COEFFICIENT u = 0.25, AND A FRICTION WOBBLE COEFFICIENT k = 0.0002 MODIFIED IN EACH SPAN FOR HORIZONTAL CURVATURE. SEE TABLE, DRAWING NUMBER B-36, FOR MODIFIED k' VALVES USED. CONTRACTOR TO SUBMIT ELONGATION AND JACKING CALCULATIONS BASED ON THESE VALUES.

PJACK SPECIFIED AT THE JACKING END INCLUDES FRICTION LOSSES AND PROVISIONS FOR AN ADDITIONAL 33.0 ksi LOSS IN STRESS.

TENDONS TO BE JACKED TO 0.75 f's AND ANCHORED AT AN EQUIVALENT ANCHOR SET = 5/8". ALL TENDONS SHOWN ON THIS DRAWING TO BE JACKED FROM BOTH ENDS.

PRESTRESSING STEEL SHALL BE UNCOATED SEVEN-WIRE STRESS-RELIEVED STRAND, AASHTO M 203, GRADE 270, 1/2" NOMINAL DIAMETER.

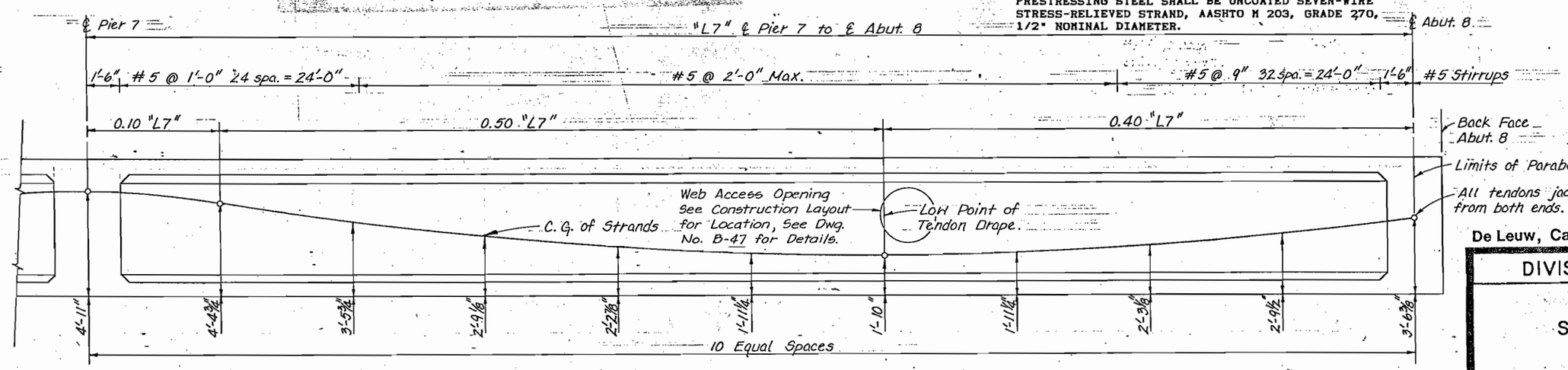

SPAN 7

WEB ELEVATION

UNIT ② ALL WEBS

INITIAL	DATE	CHECKED BY	M.R.M. 9-85
DESIGNED BY M.R.M.	9-85	QUANTITIES BY	R.M.H. 11-85
CHECKED BY S.Y.S.	9-85	CHECKED BY	
DETAILED BY			

De Leuw, Cather & Company Denver, CO.

DIVISION OF HIGHWAYS

SUPERSTRUCTURE DETAILS UNIT ②

Designer M. Merklinger		Structure Numbers	F-16-OE
Detailer S. Shibao			
Drawing Number B-37	of 50	Drawings	

Revision Dates (Preliminary Stage Only)

TE OF COLORADO
TE DEPARTMENT OF HIGHWAYS
ISION OF HIGHWAYS:
O. H. FORM NO. 126:
. FEB. 1984

AS CONSTRUCTED			
NO REVISIONS	REVISED 9/30/87	VOID	

FED. ROAD REGION	DIVISION	PROJ. NO.	SHEET NO.	SHEET TOTALS
VIII	COLO.	IR25-2(187)	129	~~178~~ 177

REVISIONS

* Required On Exterior Webs Only. Place ⅃ On Outside Edge As Shown. See Also Tendon Placement Detail Dwg. No. B-28.

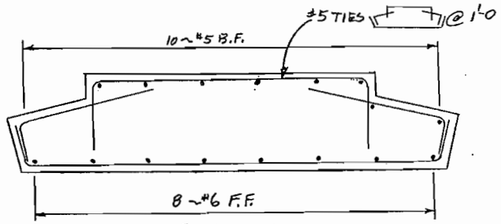

SECTION (B-38 / B)

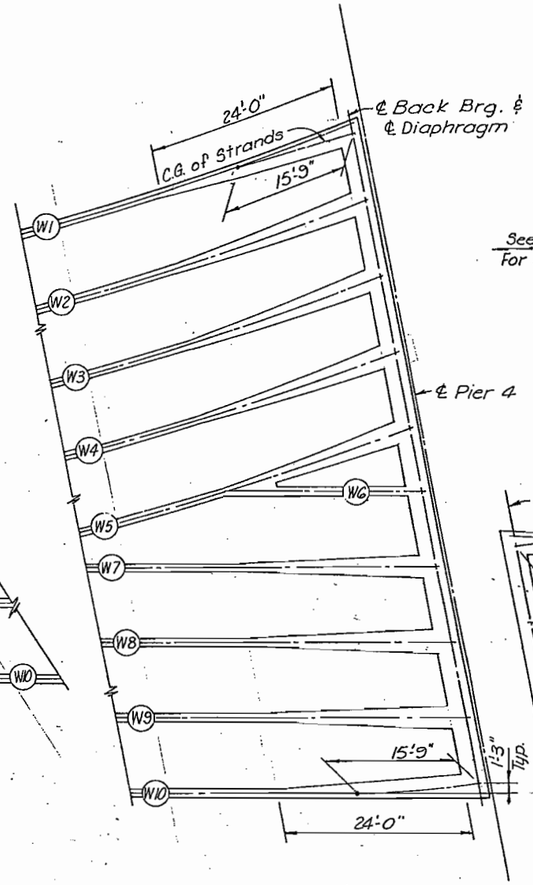

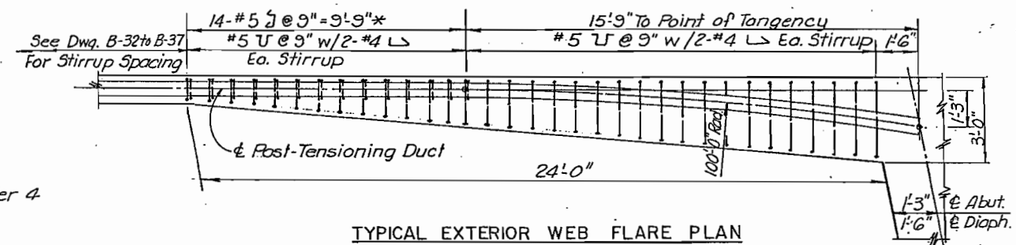

TYPICAL EXTERIOR WEB FLARE PLAN

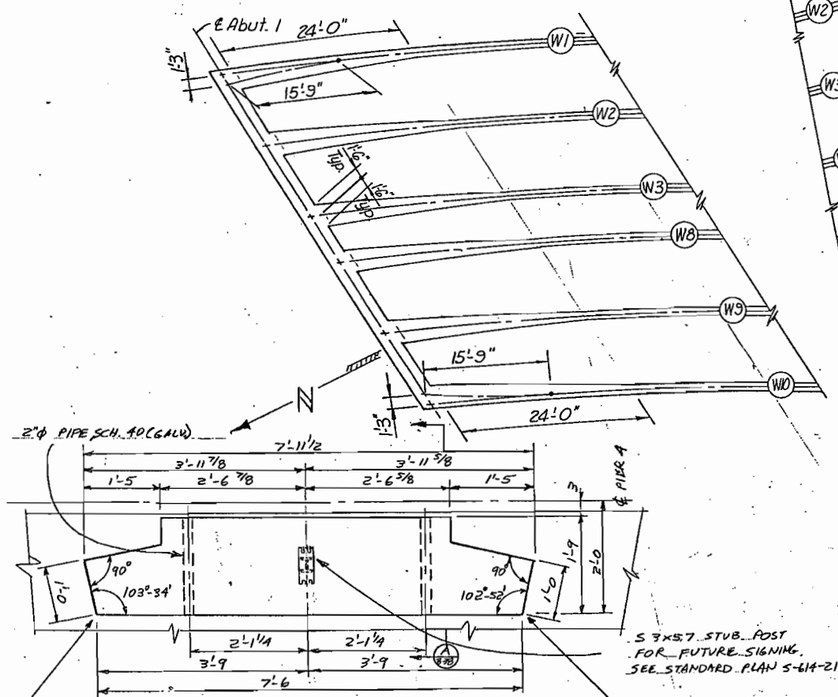

IMPACT ATTENUATOR BACK-UP BLOCK

WEB FLARE PLAN

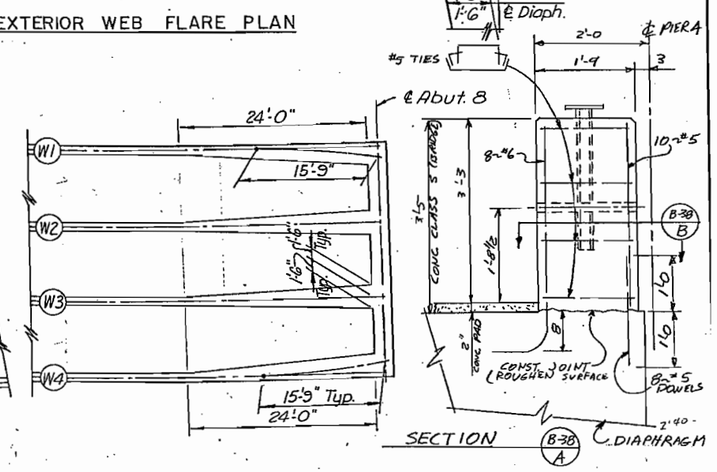

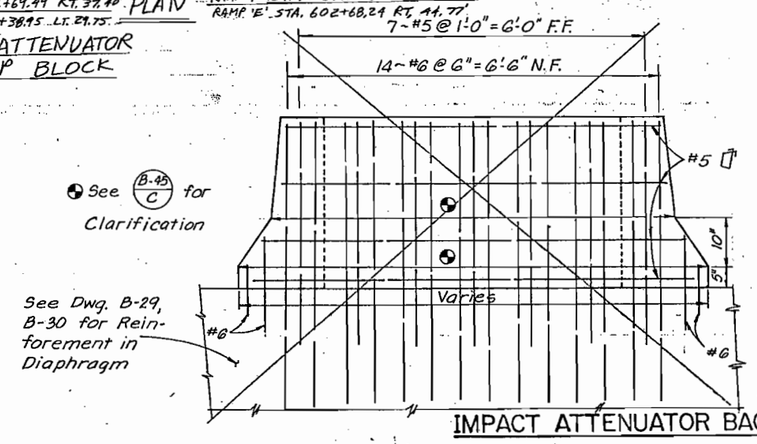

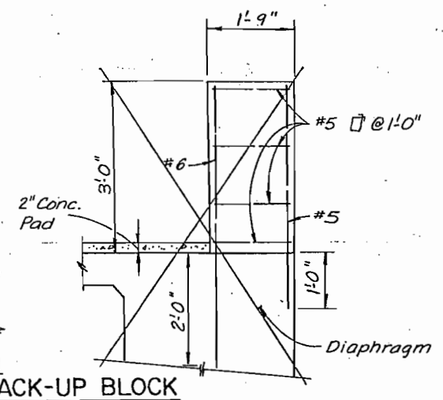

IMPACT ATTENUATOR BACK-UP BLOCK

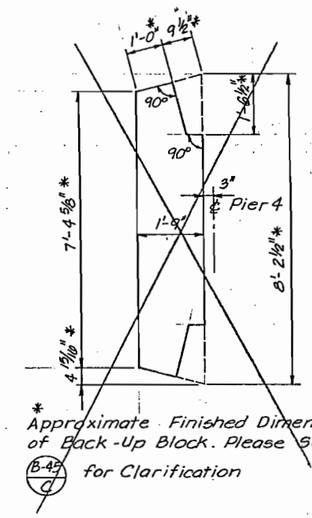

* Approximate Finished Dimension of Back-Up Block. Please See (B-45 / d) for Clarification

NOTES

1. For Prestress Anchorage Details See Dwg. B-41
2. For Prestress Tendon Elevation See Dwgs. B-32 Thru B-37.
3. The Typical Exterior Web Flare Reinforcement #5 ⊔ and #4 ⊔ are in addition to the Reinforcement shown on Dwg. B-32 thru B-37.

INITIAL	DATE	CHECKED BY	DATE
M.R.M.	10-85	M.R.M.	10-85
DESIGNED BY		QUANTITIES BY	
R.M.H.	11-85	R.M.H.	11-85
CHECKED BY		CHECKED BY	
R.M.H.	10-85		
DETAILED BY			

De Leuw, Cather & Company Denver, CO

DIVISION OF HIGHWAYS

SUPERSTRUCTURE DETAILS
WEB FLARES

Designer	M. Merklinger	Structure Numbers	F-16-NK
Detailer	R. Hinshaw		F-16-OE
Drawing Number B-38		of 50	Drawings

Revision Dates (Preliminary Stage Only)

OF COLORADO
DEPARTMENT OF HIGHWAYS
ION OF HIGHWAYS:
H. FORM NO.126:
FEB. 1984

AS CONSTRUCTED			
NO REVISIONS 9/30/87	REVISED	VOID	

FED.ROAD REGION	DIVISION	PROJ. NO.	SHEET NO.	SHEET TOTALS
VIII	COLO.	IR25-2(187)	130	~~170~~ 177

REVISIONS

DESIGNED BY	F.E.B.	9-85	
CHECKED BY	M.R.M.	9-85	
DETAILED BY	R.M.H.	11-85	
CHECKED BY			
QUANTITIES BY			
CHECKED BY			

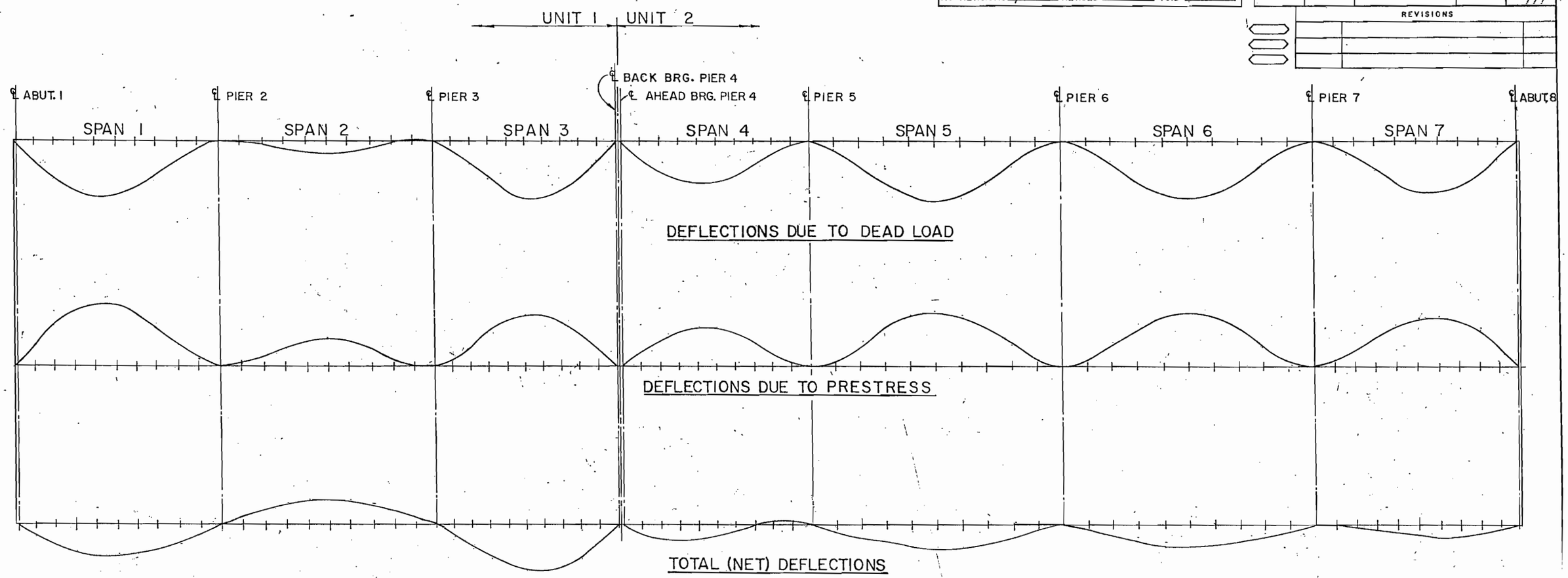

NOTES:
1. All Deflections Are In Feet.
2. Positive Deflections Are Downward.
3. The Total (Net) Deflections Have Been Multiplied By The Factor of Three (3) To Include The Long Term Effects.
4. Dead Load Deflections Include Superimposed Dead Load Effects.
5. The Camber in the Tables shall be applied to all Webs.

DEFLECTION TABLES

	1.0	1.1	1.2	1.3	1.4	1.5	1.6	1.7	1.8	1.9	2.0	2.1	2.2	2.3	2.4	2.5	2.6	2.7	2.8	2.9	3.0	3.1	3.2	3.3	3.4	3.5	3.6	3.7	3.8	3.9	4.0
DEAD LOAD	0.000	0.027	0.050	0.066	0.074	0.073	0.064	0.049	0.030	0.012	0.000	-0.001	0.004	0.010	0.016	0.018	0.016	0.011	0.004	-0.002	0.000	0.012	0.030	0.048	0.062	0.071	0.071	0.063	0.048	0.025	0.000
PRESTRESS	0.000	-0.022	-0.041	-0.055	-0.061	-0.061	-0.052	-0.039	-0.022	-0.008	0.000	0.002	-0.010	-0.019	-0.026	-0.028	-0.026	-0.018	-0.009	-0.001	0.000	-0.007	-0.020	-0.034	-0.046	-0.052	-0.052	-0.046	-0.034	-0.018	0.000
TOTAL	0.000	0.015	0.027	0.033	0.039	0.036	0.036	0.030	0.024	0.012	0.000	-0.009	-0.018	-0.027	-0.030	-0.030	-0.030	-0.021	-0.015	-0.009	0.000	0.015	0.030	0.042	0.048	0.057	0.057	0.051	0.042	0.021	0.000

	4.0	4.1	4.2	4.3	4.4	4.5	4.6	4.7	4.8	4.9	5.0	5.1	5.2	5.3	5.4	5.5	5.6	5.7	5.8	5.9	6.0	6.1	6.2	6.3	6.4	6.5	6.6	6.7	6.8	6.9	7.0
DEAD LOAD	0.000	0.020	0.036	0.047	0.052	0.050	0.042	0.029	0.015	0.004	0.000	0.011	0.033	0.055	0.071	0.077	0.071	0.054	0.031	0.010	0.000	0.009	0.030	0.052	0.068	0.074	0.068	0.053	0.031	0.010	0.000
PRESTRESS	0.000	-0.015	-0.030	-0.041	-0.046	-0.046	-0.039	-0.029	-0.016	-0.005	0.000	-0.008	-0.027	-0.048	-0.062	-0.067	-0.062	-0.046	-0.026	-0.008	0.000	-0.007	-0.025	-0.045	-0.059	-0.065	-0.060	-0.046	-0.026	-0.007	0.000
TOTAL	0.000	0.015	0.018	0.018	0.018	0.012	0.009	0.000	-0.003	-0.003	0.000	0.009	0.018	0.021	0.027	0.030	0.027	0.024	0.015	0.006	0.000	0.006	0.015	0.021	0.027	0.027	0.024	0.021	0.015	0.009	0.000

	7.0	7.1	7.2	7.3	7.4	7.5	7.6	7.7	7.8	7.9	8.0
DEAD LOAD	0.000	0.006	0.021	0.038	0.053	0.063	0.066	0.060	0.045	0.025	0.000
PRESTRESS	0.000	-0.006	-0.019	-0.035	-0.050	-0.059	-0.061	-0.055	-0.042	-0.023	0.000
TOTAL	0.000	0.000	0.006	0.009	0.009	0.012	0.015	0.015	0.009	0.006	0.000

De Leuw, Cather & Company Denver, CO

DIVISION OF HIGHWAYS

SUPERSTRUCTURE DEFLECTIONS

Designer	Boustani/Merklinger	Structure Numbers	F-16-NK
Detailer	R. Hinshaw		F-16-OE
Drawing Number B-39		of 50	Drawings

Revision Dates (Preliminary Stage Only)

E OF COLORADO
E DEPARTMENT OF HIGHWAYS
SION OF HIGHWAYS:
.H. FORM NO. 126:
FEB. 1984

AS CONSTRUCTED			
NO REVISIONS 9/30/87	REVISED		VOID

FED. ROAD REGION	DIVISION	PROJ. NO.	SHEET NO.	SHEET TOTALS
VIII	COLO.	IR25-2(187)	131	~~176~~ 177

REVISIONS

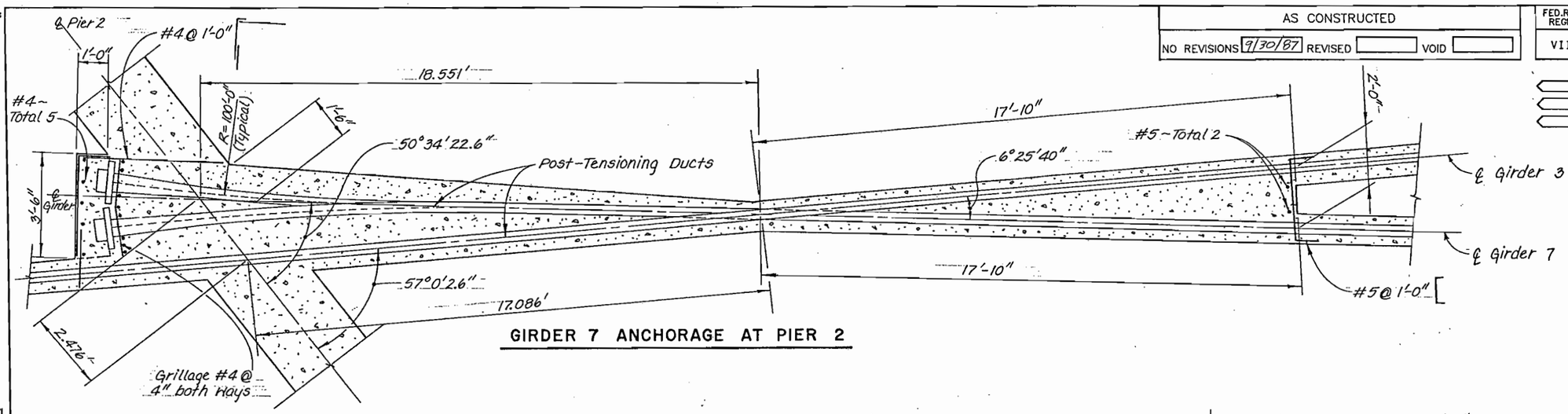

GIRDER 7 ANCHORAGE AT PIER 2

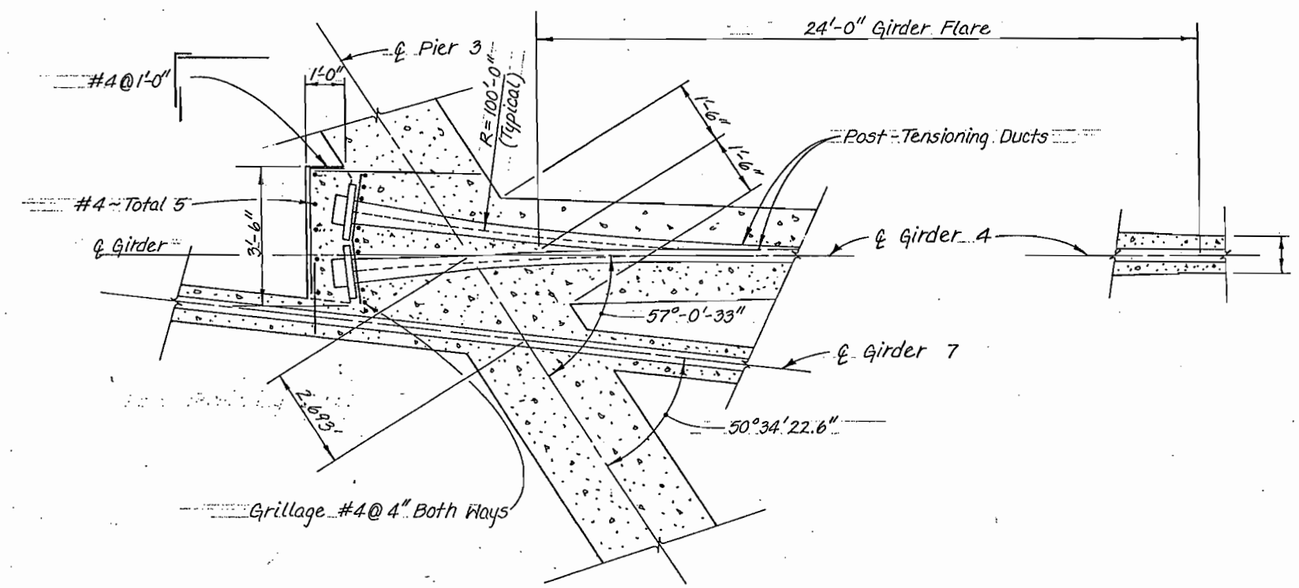

GIRDER 4 ANCHORAGE AT PIER 3

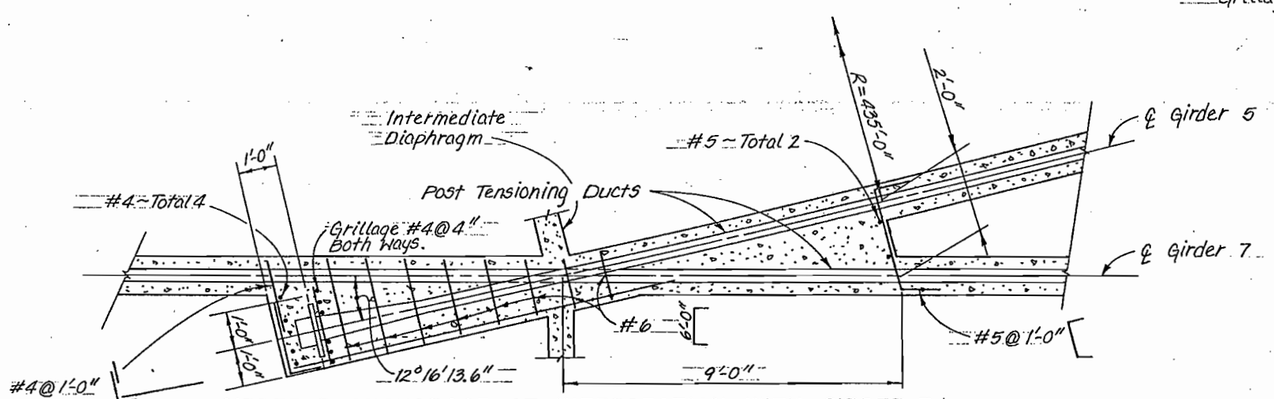

GIRDER 5 ANCHORAGE AT INTERSECTION WITH GIRDER 7

	INITIAL	DATE		
DESIGNED BY	J.L.S.	9-85	CHECKED BY	J.L.S. 10-85
CHECKED BY			QUANTITIES BY	R.M.H. 11-85
DETAILED BY	S.Y.S.	9-85	CHECKED BY	

De Leuw, Cather & Company Denver, CO.

DIVISION OF HIGHWAYS

POST-TENSIONING
ANCHORAGE DETAILS
UNIT 1

Designer J. Stapleton		Structure Numbers	F-16-NK
Detailer S. Shibao			
Drawing Number B-40	of 50	Drawings	

Revision Dates (Preliminary Stage Only)

AS CONSTRUCTED		
NO REVISIONS 9/30/87	REVISED	VOID

FEDERAL ROAD REGION NO.	DIVISION	PROJ. NO.	SHEET NO.	TOTAL SHEETS
VIII	COLORADO	IR 25-2(187)	132	772

REVISIONS		

BRIDGE STANDARD 73

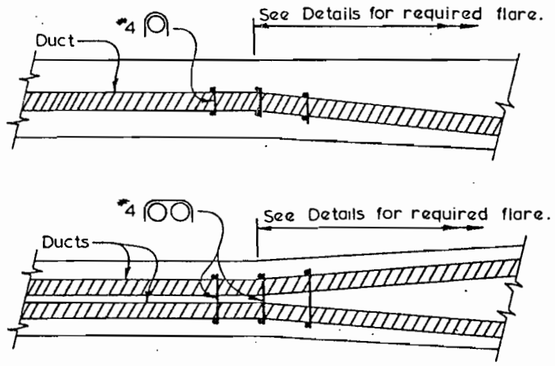

PLAN VIEWS

Provide #4 ties for each pair of ducts, or single ducts, tie to three stirrups at beginning of duct flare.

ADDITIONAL REINFORCEMENT AT FLARE OF DUCTS

NOTES FOR DUCT CLEARANCE

DUCT PATTERNS SHOWN ARE FOR A "W" WIDE GIRDER STEM: FOR WIDTH "W", SEE PLANS.

GIRDER STIRRUPS MUST BE BENT TO FIT THE DUCT SIZE USED, OR ⊔ STIRRUPS MAY BE USED.

APPROVAL OF THE ENGINEER IS REQUIRED FOR DEVIATIONS.

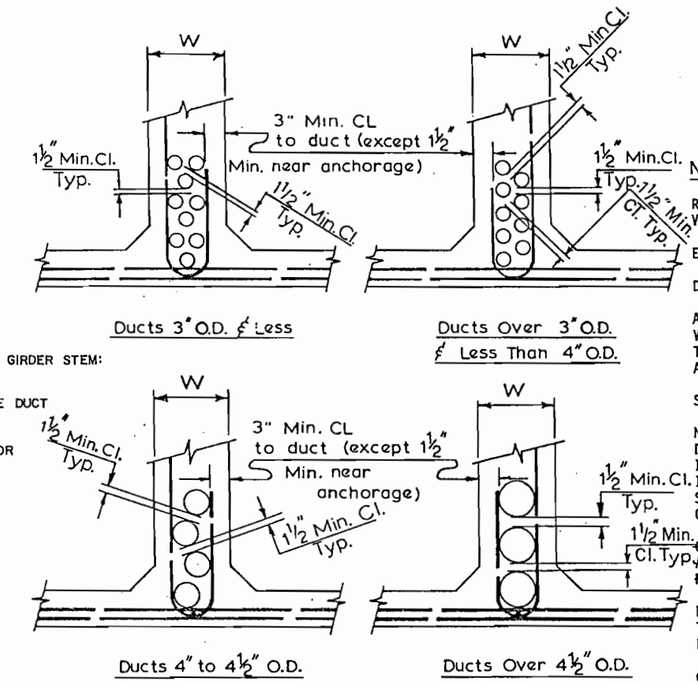

Ducts 3" O.D. & Less

Ducts Over 3" O.D. & Less Than 4" O.D.

Ducts 4" to 4½" O.D.

Ducts Over 4½" O.D.

CLEARANCE REQUIREMENTS FOR DUCTS

NOTES:

RECESS FOR ANCHORAGE TO BE FILLED WITH CONCRETE TO PROVIDE A MINIMUM OF 1-1/2" COVER.

EDGE DISTANCE OF BEARING PLATES SHALL BE 1-1/2" MINIMUM.

DISTRIBUTION OF PRESTRESSING FORCE:

AT THE CONTRACTOR'S OPTION, THE PRESTRESSING FORCE MAY VARY 5% FROM THE THEORETICAL FORCE PER GIRDER PROVIDED THE TOTAL FORCE IS OBTAINED AND IS DISTRIBUTED SYM. ABOUT THE CENTERLINE OF THE TYPICAL SECTION.

STRESSING SEQUENCE:

NO MORE THAN 1/2 OF THE PRESTRESSING FORCE IN ANY GIRDER MAY BE STRESSED BEFORE AN EQUAL FORCE IS STRESSED IN THE ADJACENT GIRDERS. AT NO TIME DURING THE STRESSING OPERATIONS WILL MORE THAN 1/6 OF THE TOTAL PRESTRESSING FORCE BE APPLIED ECCENTRICALLY ABOUT THE CENTERLINE OF THE STRUCTURE.

~~GIRDER STEM SHALL BE FLARED NEAR ANCHORAGE TO PROVIDE A MINIMUM OF 1-1/2" CONCRETE COVERING THE DUCTS, FLARE MAY BE ON ONE SIDE OF THE GIRDER ONLY.~~

BAR REINFORCEMENT INTERFERING WITH THE PRESTRESSING TENDON ALIGNMENT SHALL BE ADJUSTED AS APPROVED BY THE ENGINEER.

GIRDER STEM SHALL BE FLARED NEAR ANCHORAGE AS SHOWN ON DWG. B-38.

ADEQUATE BURSTING REINFORCEMENT SHALL BE PROVIDED, AND SHALL BE INCIDENTAL TO ITEM 618, PRESTRESSING STEEL WIRE OR STRAND.

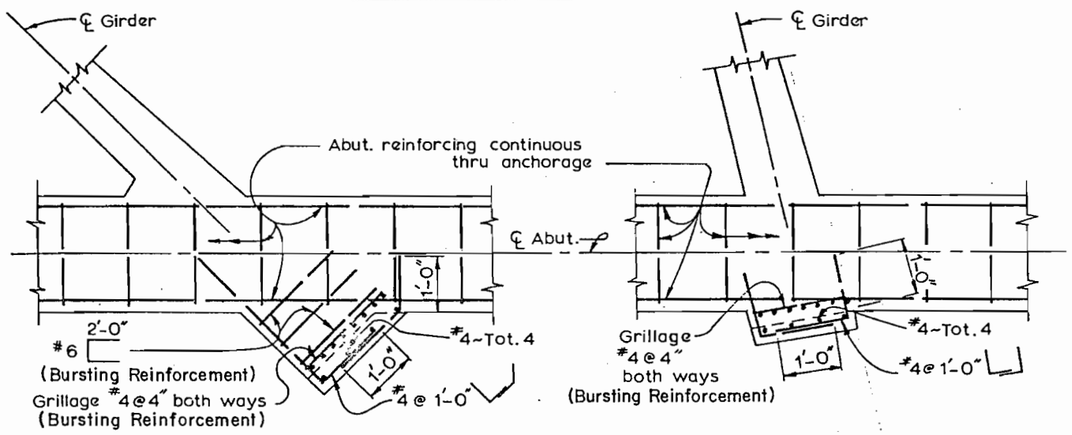

Skew Over 20°

PLAN VIEWS

Skew 20° & Under

BEARING SEAT FOR PRESTRESSED ANCHORAGE AT ABUTMENTS AND PIER 4 UNIT 2

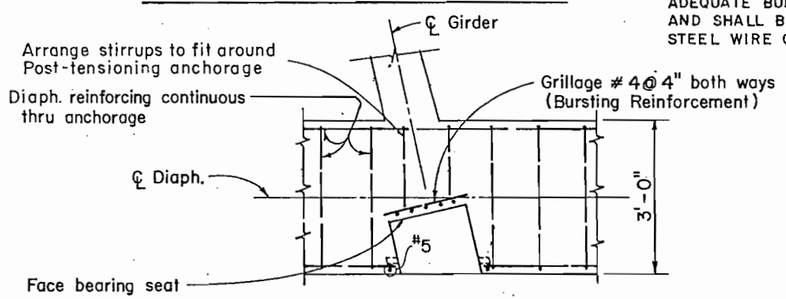

BEARING SEAT FOR PRESTRESSED ANCHORAGE AT PIER 4 UNIT 1 ONLY

Note: Bearing plates shall be placed normal to tendon path

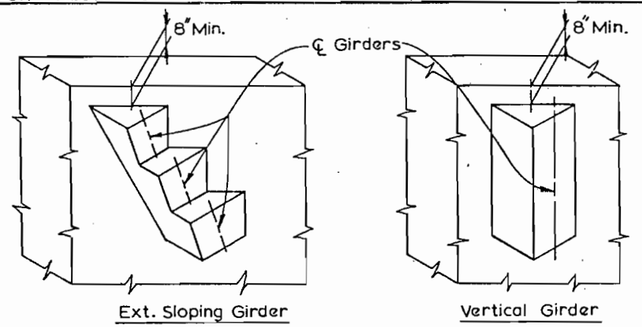

Ext. Sloping Girder

Vertical Girder

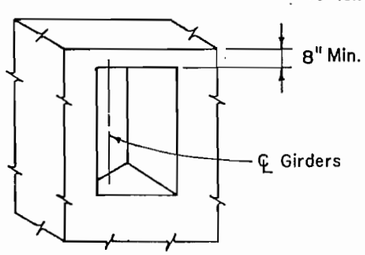

Vertical Girder

TYPICAL BEARING SEAT ILLUSTRATIONS

Details may be modified to specific anchorage

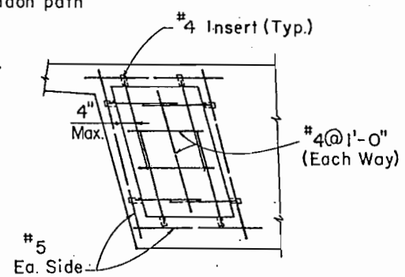

Width and depth of recessed area vary according to Post-tensioning supplier. Recess to be filled with non-shrinking grout after tendons are stressed

CLOSURE OF ANCHORAGE

DIVISION OF HIGHWAYS

CAST-IN-PLACE PRESTRESSED GIRDER DETAILS

Designer	Stapleton/Merklinger	Structure Numbers	F-16-NK
Detailer	S. Shibao		F-16-OE
Drawing Number B-41		of 50	Drawings

Revision Dates (Preliminary Stage Only)

(11-1-79)

AS CONSTRUCTED			
NO REVISIONS 9/30/87	REVISED		VOID

FEDERAL ROAD REGION NO.	DIVISION	PROJ. NO.	SHEET NO	TOTAL SHEETS
VIII	COLORADO	IR 25-2(187)	133	~~170~~ 177

REVISIONS		

BRIDGE STANDARD 71

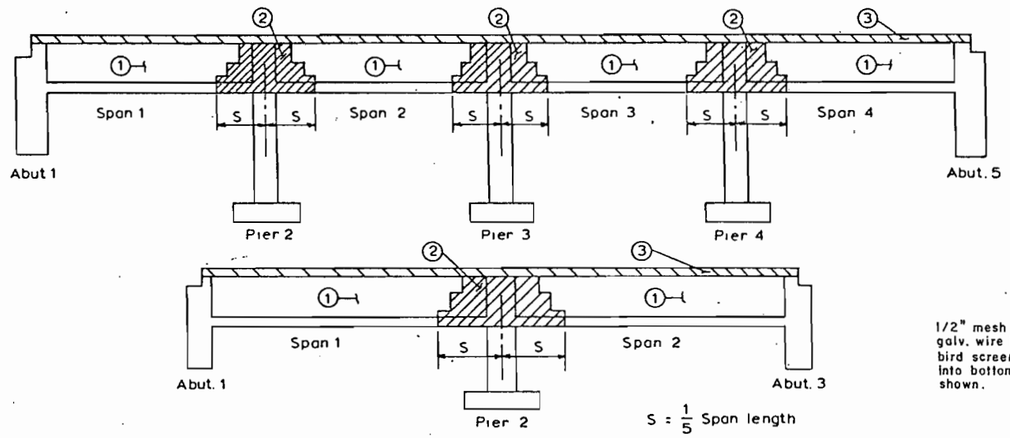

BOX GIRDER SUPERSTRUCTURE PLACING SCHEDULE

Note Numbers (1) and (2) indicate sequence of placing bottom slab and girder web concrete when each section constitutes a separate pour. (3) Shall be placed separately from (1) and (2). (3) may be placed continously or in parts, as approved by the Engineer, providing no transverse construction joints fall within the (2) areas Contractors may submit an alternate placing schedule to the engineer for approval.

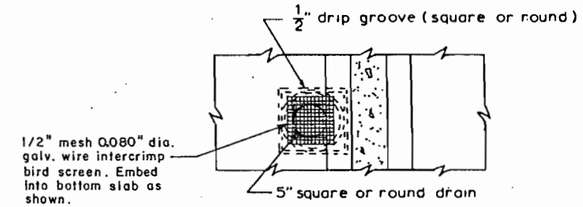

PLAN

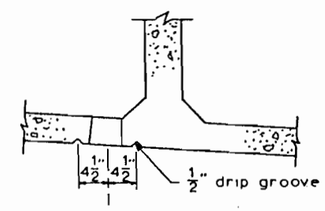

ELEVATION

BOTTOM SLAB DRAIN DETAIL

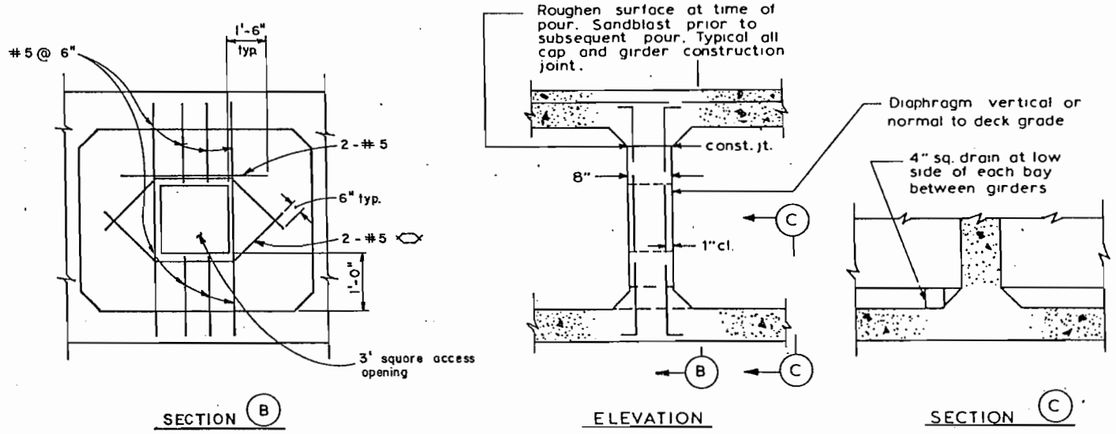

SECTION (B) ELEVATION SECTION (C)

INTERMEDIATE DIAPHRAGM SECTION

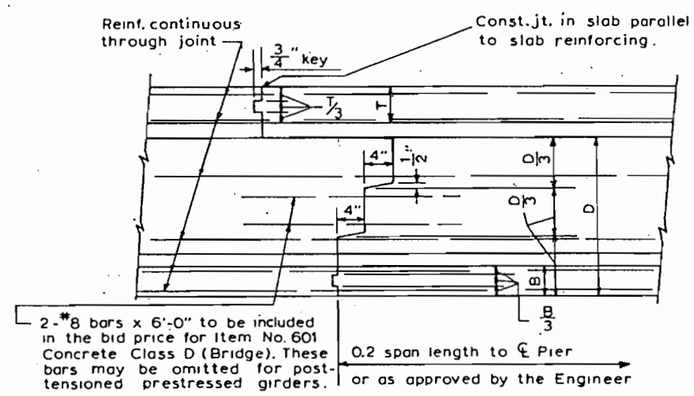

TRANSVERSE GIRDER CONSTRUCTION JOINT

T : Top slab thickness
B : Bottom slab thickness

DIVISION OF HIGHWAYS

BOX GIRDER DETAILS

Designer C.D.O.H.		Structure Numbers	F-16-NK
Detailer R. Panning			F-16-OE
Drawing Number B-42		of 50	Drawings

Revision Dates (Preliminary Stage Only)

(11-1-79)

71

STATE OF COLORADO
STATE DEPARTMENT OF HIGHWAYS
DIVISION OF HIGHWAYS:
D. H. FORM NO. 126:
7. FEB. 1984

REVISIONS

AS CONSTRUCTED			
NO REVISIONS		REVISED 9/30/87	VOID

FED. ROAD REGION	DIVISION	PROJ. NO.	SHEET NO.	SHEET TOTALS
VIII	COLO.	IR25-2(187)	134	~~176~~ 177

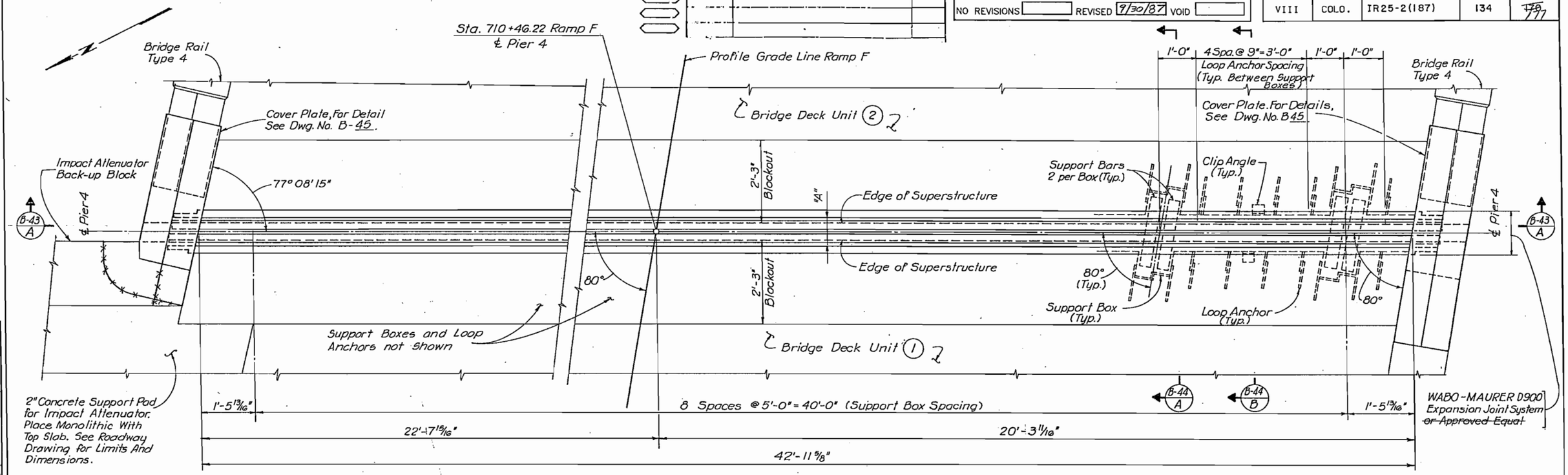

PLAN AT PIER 4

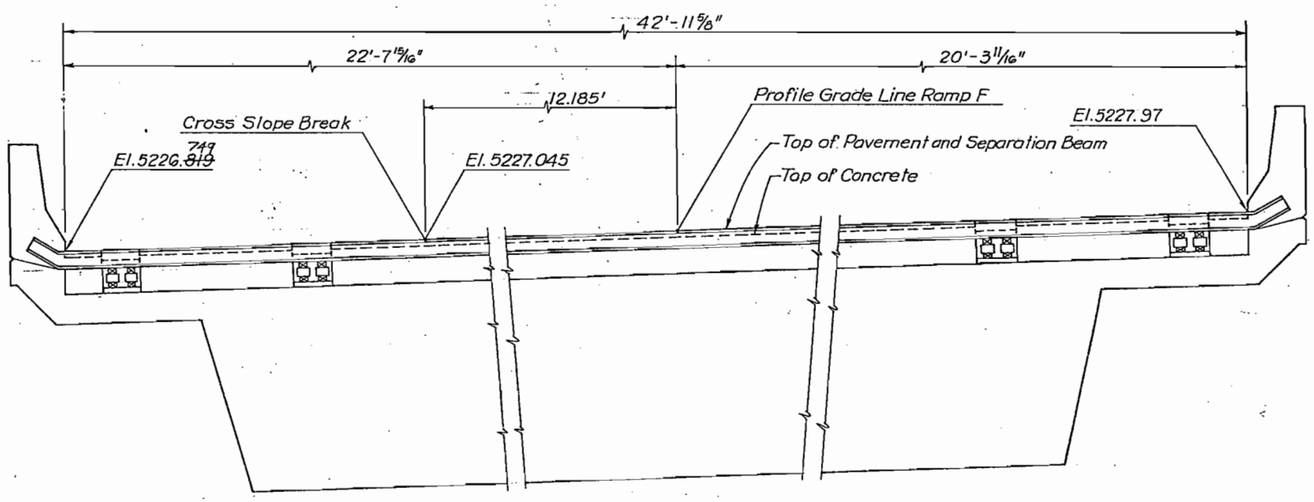

SECTION B-43 A

NOTE

Work This Drawing With Drawing No. B-44 And B-45.

INITIAL	DATE	CHECKED BY	J.L.S.	11-85
J.L.S.	10-85	QUANTITIES BY	R.M.H.	11-85
V.V.V.	10-85	CHECKED BY		

DESIGNED BY / CHECKED BY / DETAILED BY

De Leuw, Cather & Company — Denver, CO.

DIVISION OF HIGHWAYS

EXPANSION DEVICE
(0-9 INCH)
PIER 4

Designer J. Stapleton	Structure Numbers	F-16-NK
Detailer V. Villao		F-16-OE

Drawing Number B-43 of 50 Drawings

Revision Dates (Preliminary Stage Only)

TE OF COLORADO
TE DEPARTMENT OF HIGHWAYS
ISION OF HIGHWAYS:
O. H. FORM NO. 126:
. FEB. 1984

AS CONSTRUCTED			
NO REVISIONS 9/30/87	REVISED		VOID

FED. ROAD REGION	DIVISION	PROJ. NO.	SHEET NO.	SHEET TOTALS
VIII	COLO.	IR25-2(187)	135	~~178~~ 177

REVISIONS		

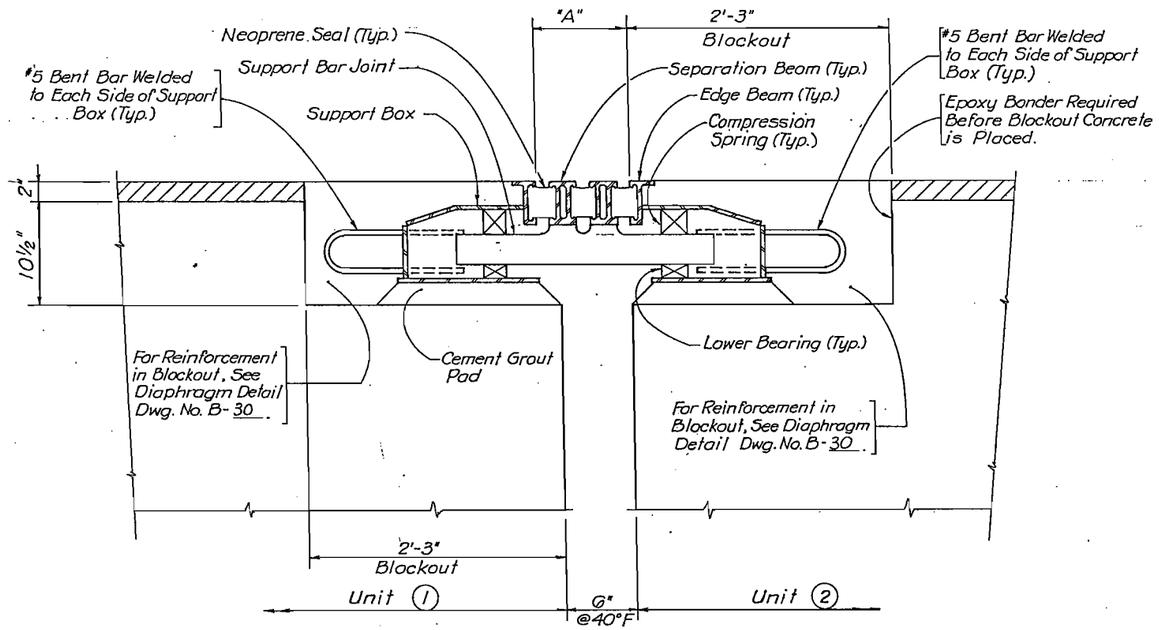

SECTION B-43 A

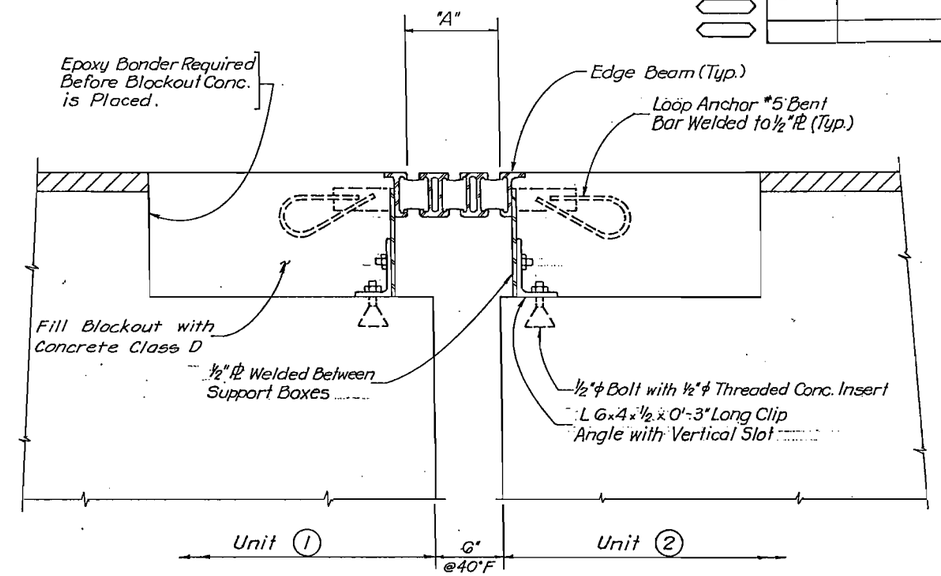

SECTION B-43 B

NOTES:

1. Location and size of support bars, anchor assembly, anchor angle, bracket for attachment to steel and stiffener plates shall be per manufacturer's drawings.
2. See table for dimension "A".
3. The expansion device shall be installed on grade, parallel to the slope and grade of the deck.
4. After the concrete has attained initial set, the attachments used to hold the expansion device assembly in its proper position shall be removed.
5. Do not paint steel surfaces in contact with concrete and elastomeric seals.
6. "A" dimensions are dependent upon the particular expansion device supplied, and shall be shown on the shop drawings.
7. The shop drawings shall indicate the "A" dimensions at a range of temperatures from 30°F to 100°F assuming a mid-point temperature of 40°F.
8. The neoprene seals shall be supplied and installed in one continuous piece.

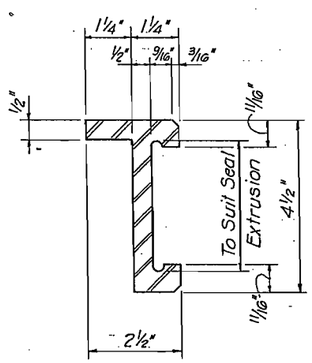

EDGE BEAM

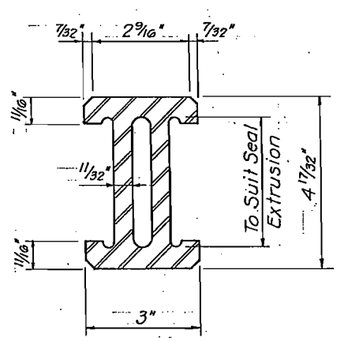

SEPARATION BEAM

STRUCTURE TEMPERATURE	PIER 4 DIMENSION "A"
30°F	8 13/16"
40°F	8½"
50°F	8 3/16"
60°F	7 13/16"
70°F	7½"
80°F	7 3/16"
90°F	6⅞"
100°F	6½"
Min. "A"=6" ; Max. "A"=15"	

	INITIAL	DATE	CHECKED BY	J.L.S.	11-85
DESIGNED BY	J.L.S.	10-85	QUANTITIES BY	R.M.H.	11-85
CHECKED BY	V.V.V.	10-85	CHECKED BY		
DETAILED BY					

De Leuw, Cather & Company Denver, CO.

DIVISION OF HIGHWAYS

EXPANSION DEVICE
(0-9 INCH)
PIER 4

Designer J. Stapleton		Structure Numbers	F-16-NK
Detailer V. Villao			F-16-OE
Drawing Number B-44	of 50	Drawings	

Revision Dates				(Preliminary Stage Only)			

AS CONSTRUCTED		
NO REVISIONS	REVISED 9/30/87	VOID

FED. ROAD REGION	DIVISION	PROJ. NO.	SHEET NO.	SHEET TOTALS
VIII	COLO.	IR 25-2(187)	136	170

REVISIONS

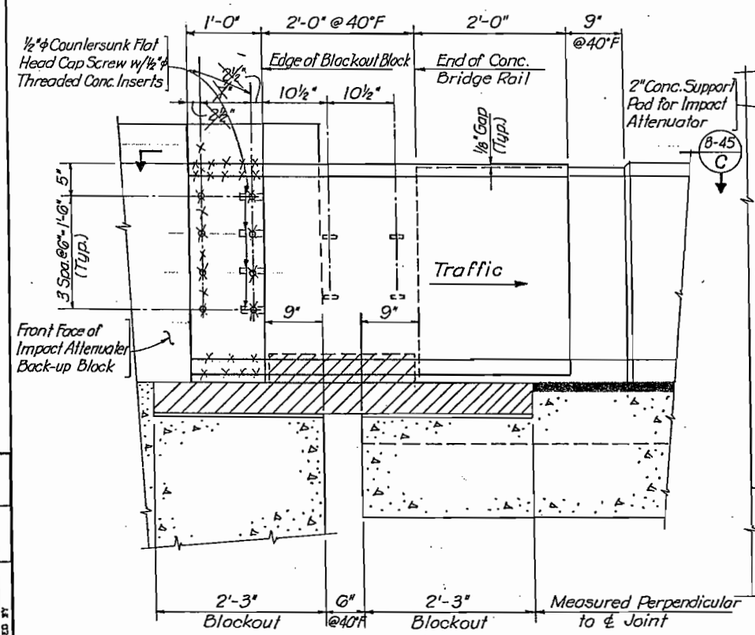

ELEVATION - LEFT RAIL

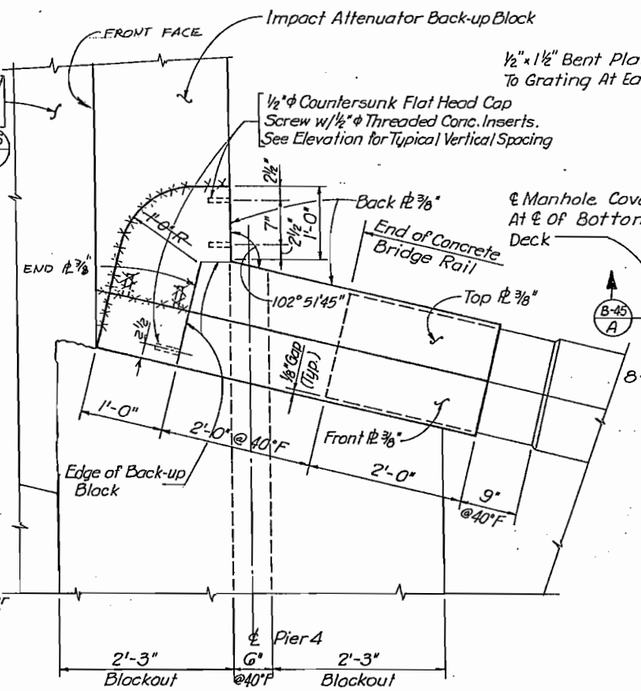

SECTION B-45 C

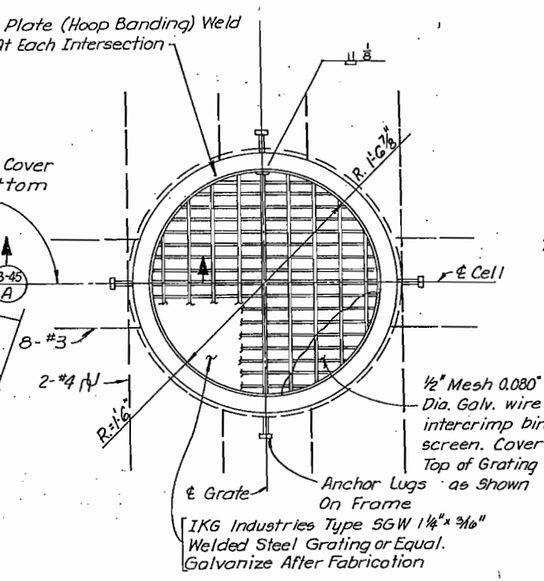

PLAN~MANHOLE

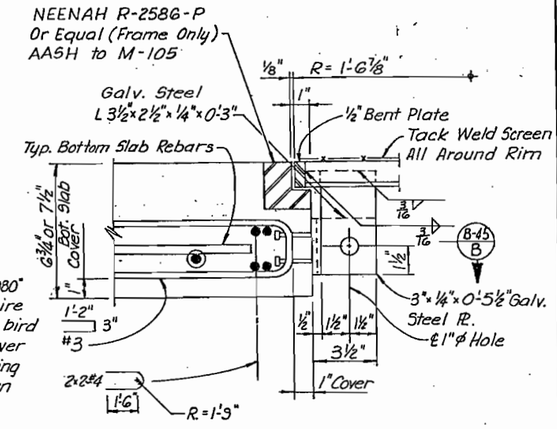

SECTION B-45 A

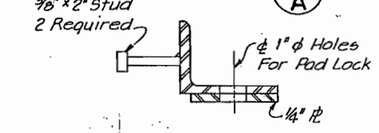

SECTION B-45 B

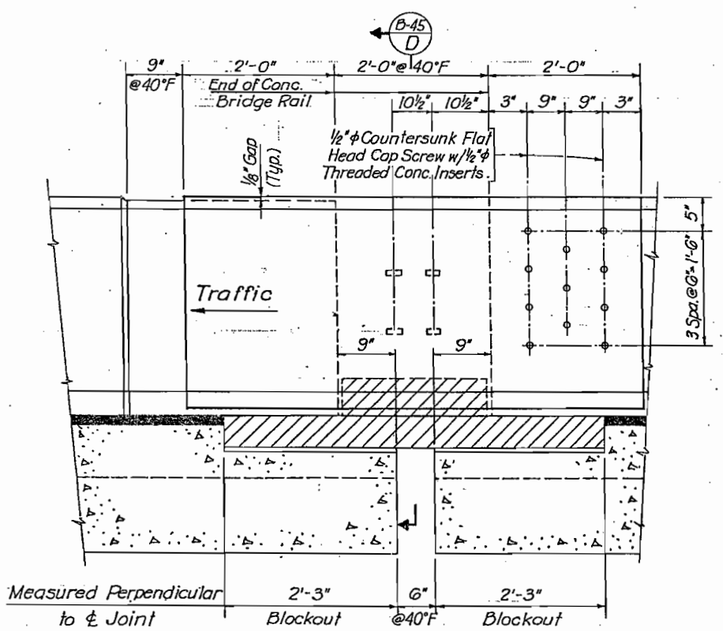

ELEVATION - RIGHT RAIL

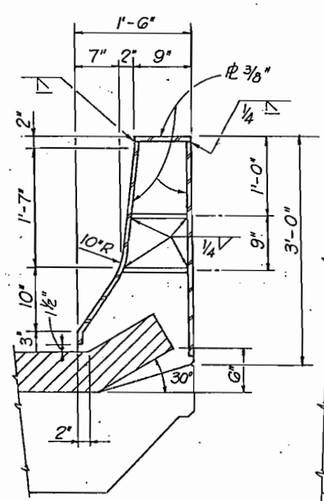

SECTION B-45 D

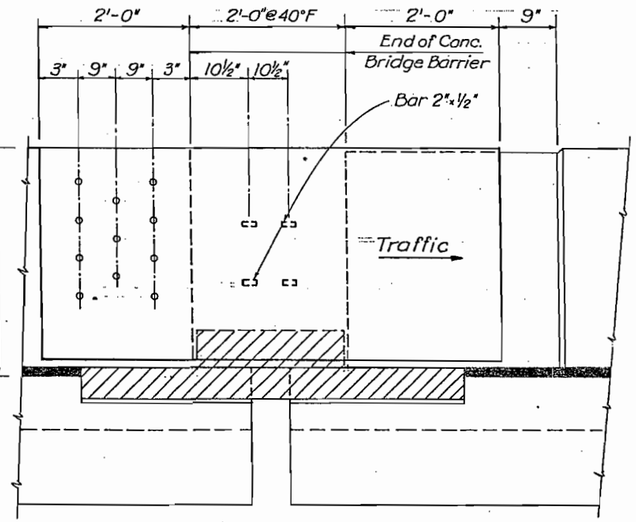

ELEVATION - RIGHT RAIL

NOTES:

1. Visible Metal Surfaces on Cover Plates Shall be treated with a Colored Acrylic Coating to match the Concrete Bridge Rail.
2. Cover Plates and related Hardware shall not be paid for separately, but shall be included in payment for Item 518, Bridge Expansion Devise (0-9 Inch).
3. Payment for Manholes shall be made under Item 509 Structural Steel, and Item 509 Structural Steel (Galvanized).

	INITIAL	DATE		INITIAL	DATE
DESIGNED BY	J.L.S.	9-85	CHECKED BY	J.L.S.	10-85
CHECKED BY	S.Y.S.	9-85	QUANTITIES BY	R.M.H.	11-85
DETAILED BY	S.Y.S.	9-85	CHECKED BY		

De Leuw, Cather & Company Denver, CO.

DIVISION OF HIGHWAYS

COVER PLATE DETAILS
PIER 4

Designer J. Stapleton		Structure Numbers	F-16-NK
Detailer S. Shibao			F-16-OE
Drawing Number B-45	of 50	Drawings	

Revision Dates (Preliminary Stage Only)

E OF COLORADO
E DEPARTMENT OF HIGHWAYS
SION OF HIGHWAYS
). M-FORM NO. 117
OCT. 1983

AS CONSTRUCTED			
NO REVISIONS		REVISED 7/30/87	VOID

FED. ROAD REGION	DIVISION	PROJ. NO.	SHEET NO.	TOTAL SHEETS
VIII	COLO.	IR25-2(187)	137	~~120~~ 127

REVISIONS		

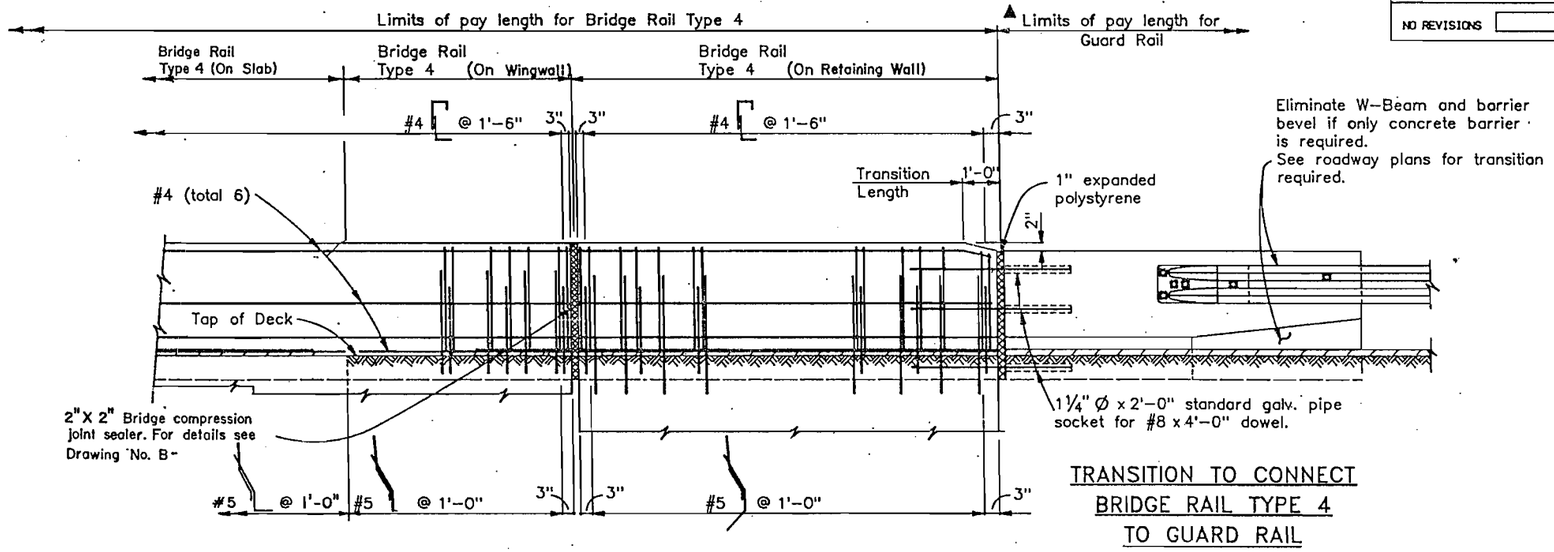

ELEVATION

TRANSITION TO CONNECT BRIDGE RAIL TYPE 4 TO GUARD RAIL

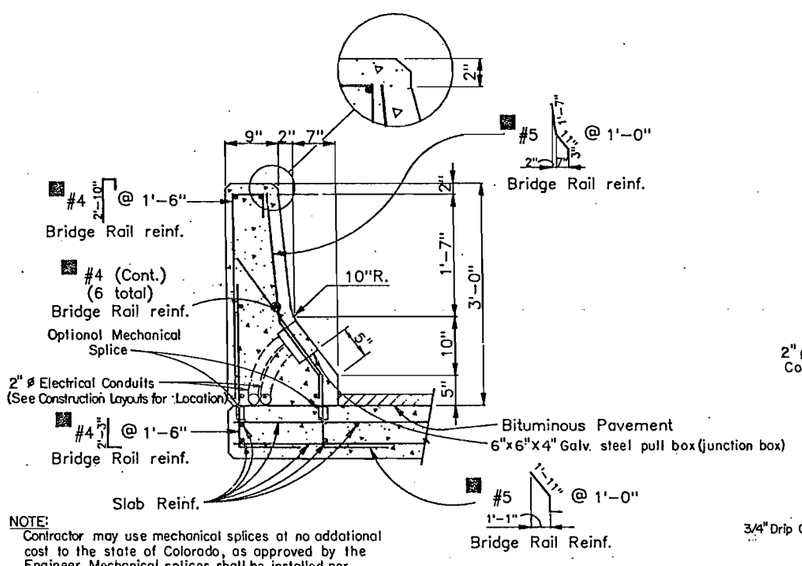

NOTE:
Contractor may use mechanical splices at no addational cost to the state of Colorado, as approved by the Engineer. Mechanical splices shall be installed per manufacturer recommendations.

SECTION AT SLAB

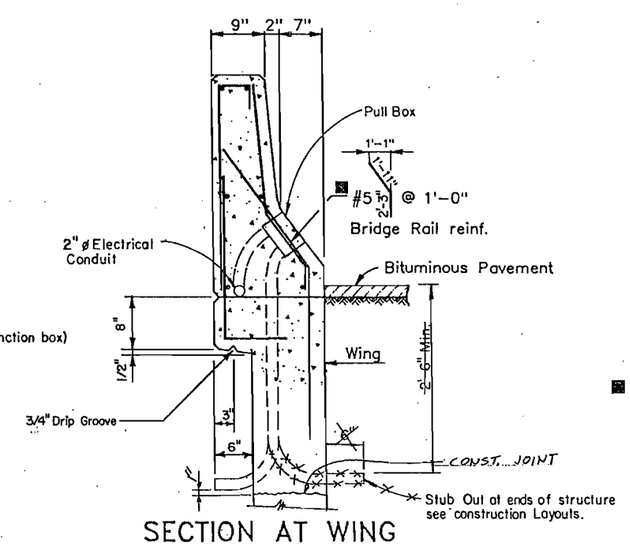

SECTION AT WING

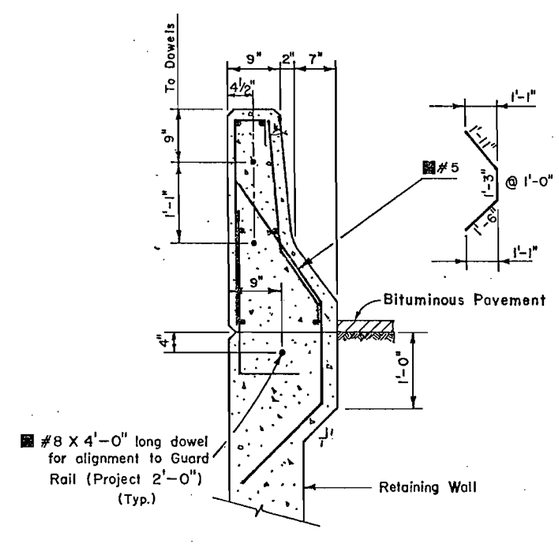

SECTION AT RETAINING WALL

BRIDGE STANDARD 16

NOTES

BACKFILL WINGWALLS AND RETAINING WALLS BEFORE BARRIER IS PLACED.

ALL BRIDGE RAIL CONCRETE SHALL BE CLASS D.

LONGITUDINAL REINFORCEMENT SHALL STOP AT ALL EXPANSION JOINTS.

BRIDGE RAIL SHALL BE CONSTRUCTED PLUMB.

BRIDGE RAIL CONCRETE (CLASS D) AND BRIDGE RAIL REINFORCEMENT SHALL BE INCLUDED IN ITEM 606 – BRIDGE RAIL TYPE 4.

▲ FOR GUARD RAIL TYPE 4, SEE STD. M-606-12 FOR DETAILS.

▲ FOR GUARD RAIL TYPE 3, SEE STD. M-606-12 FOR DETAILS OF TRANSITION AND ATTACHMENT TO CONCRETE BARRIER. SEE STD. M-606-1 FOR DETAILS OF GUARD RAIL.

DESIGN DATA

REINFORCED CONCRETE:
CLASS D CONCRETE: f_c = 1,800 psi, n = 8
REINFORCING STEEL: f_s = 24,000 psi

INFORMATION ONLY

Description	Unit	Per Lin.Ft.
Concrete Class D	Cu. Yd.	0.11
■ Reinforcing Steel (Slab)	Lb.	13.8
■ " " (Wing)	Lb.	14.2
■ " " (Wall)	Lb.	14.7

■ Epoxy coated. Only when Item 602, Reinforcing Steel (Epoxy Coated) is shown on the Summary of Quantities.

DIVISION OF HIGHWAYS

BRIDGE RAIL TYPE 4

DESIGNER	C.D.O.H.	STRUCTURE NUMBERS	F-16-NK
DETAILER	S. Shibao		F-16-OE

DRAWING NUMBER B-46 OF 50 DRAWINGS

DESIGNED BY	INITIAL	DATE	CHECKED BY	J.L.S.	9-85
PROJECT BY	C.D.O.H.	6/85	QUANTITIES BY	R.M.H.	11-85
DETAILED BY	J.L.S.	9-85	CHECKED BY		
	S.Y.S.	9-85			

WO NUMBER 06/ 85 18:45:33 _DUA1:(DRAW.STDS.MSTDS) BRSTD16

REVISION DATES	(PRELIMINARY STAGE ONLY)						
6/85							16

TE OF COLORADO
TE DEPARTMENT OF HIGHWAYS
ISION OF HIGHWAYS:
O. H. FORM NO.126:
. FEB. 1984

AS CONSTRUCTED			
NO REVISIONS		REVISED 9/30/87	VOID

FED.ROAD REGION	DIVISION	PROJ. NO.	SHEET NO.	SHEET TOTALS
VIII	COLO.	I R 25-2(187)	138	~~176~~ 177

REVISIONS		

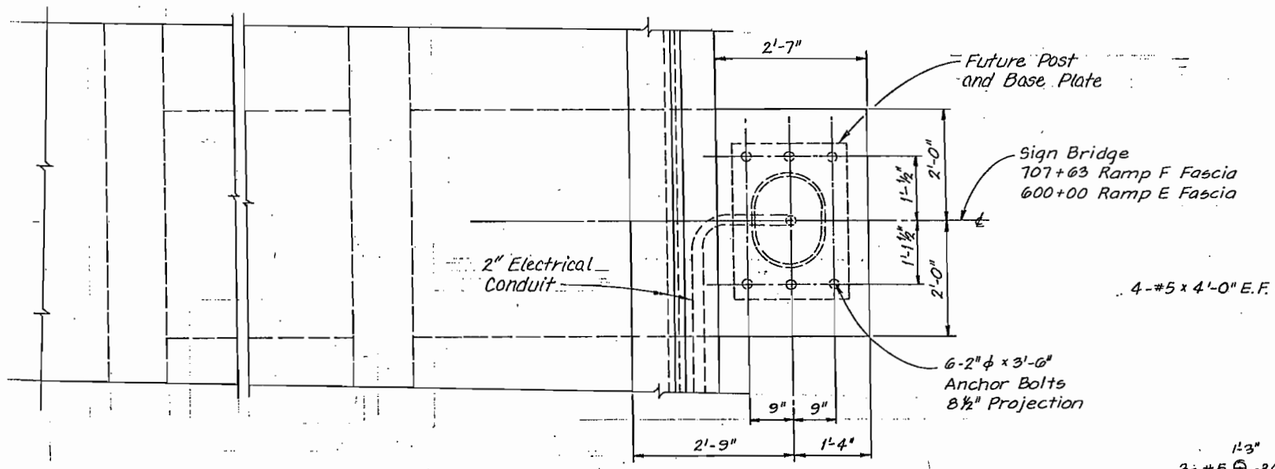

PLAN

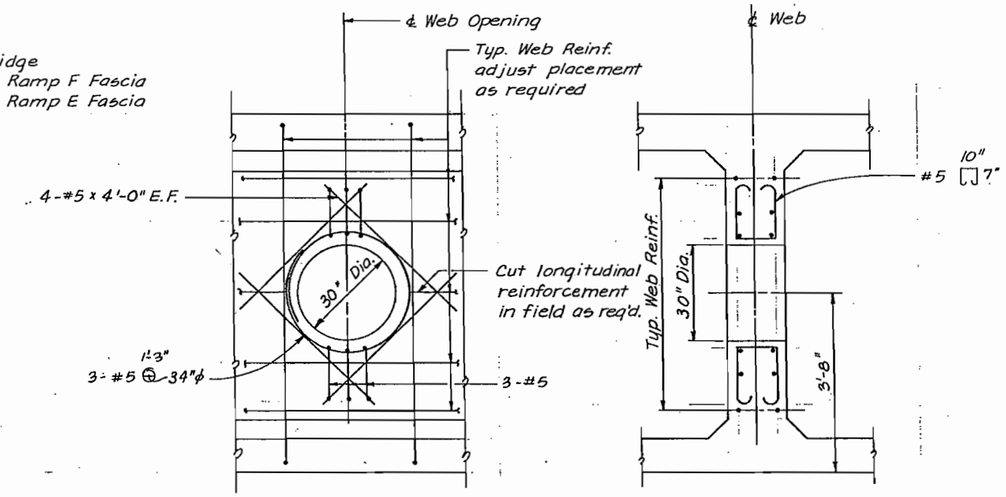

ELEVATION SECTION

WEB OPENING DETAIL

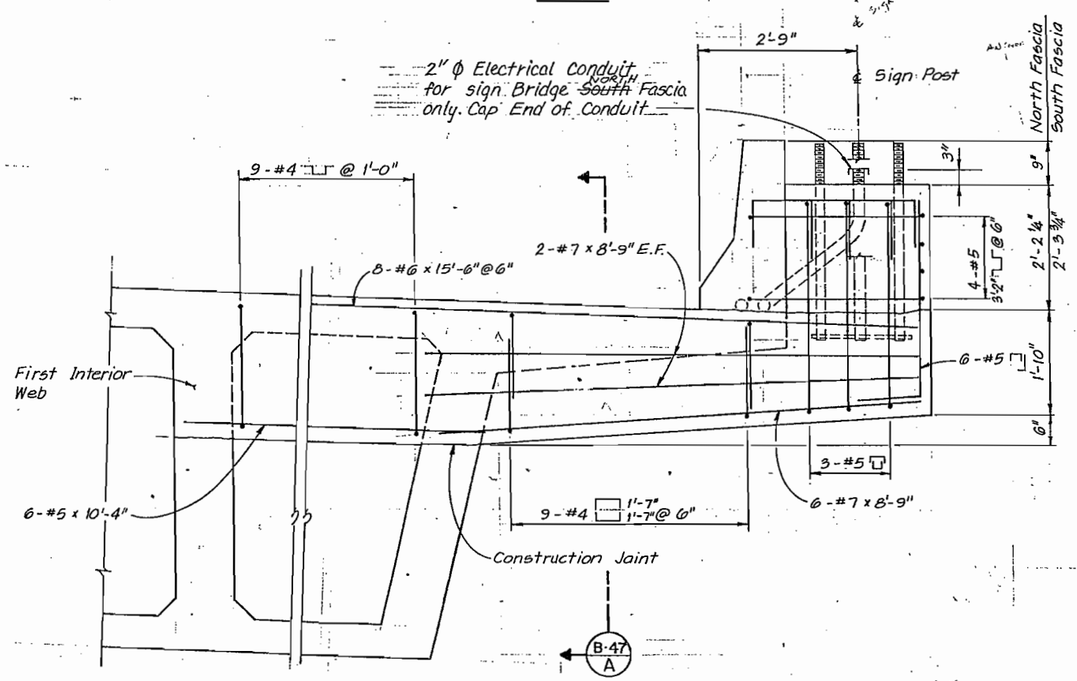

ELEVATION

BARRIER MODIFICATION FOR SIGN POST

NOTES:

1. For Anchor Bolt Details see Signing Plans.

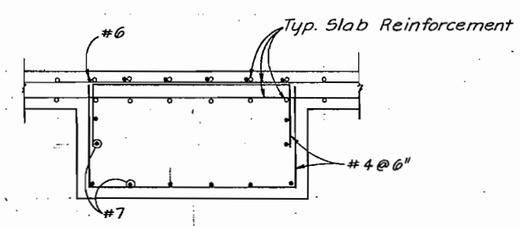

SECTION B-47 A

INITIAL	DATE	CHECKED BY	R.D.K.	10-85
R.D.K.	10-85	QUANTITIES BY	R.M.H.	11-85
R.S.P.	10-85	CHECKED BY		
DESIGNED BY				
CHECKED BY				
DETAILED BY				

De Leuw, Cather & Company Denver, CO.

DIVISION OF HIGHWAYS

SIGN BRIDGE BASE DETAILS

Designer R. Koester		Structure Numbers	F-16-NK
Detailer R. Panning			
Drawing Number B-47	of 50	Drawings	

Revision Dates (Preliminary Stage Only)

TE OF COLORADO
TE DEPARTMENT OF HIGHWAYS
ISION OF HIGHWAYS:
). H. FORM NO. 126:
. FEB. 1984

AS CONSTRUCTED			
NO REVISIONS 9/30/87	REVISED		VOID

FED. ROAD REGION	DIVISION	PROJ. NO.	SHEET NO.	SHEET TOTALS
VIII	COLO.	IR 25-2(187)	139	~~170~~ 177

REVISIONS

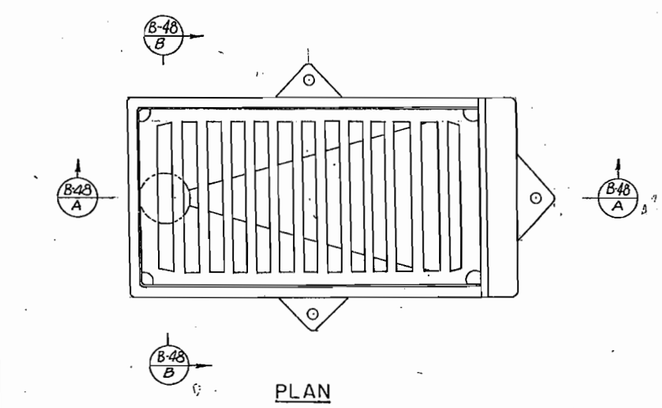

PLAN

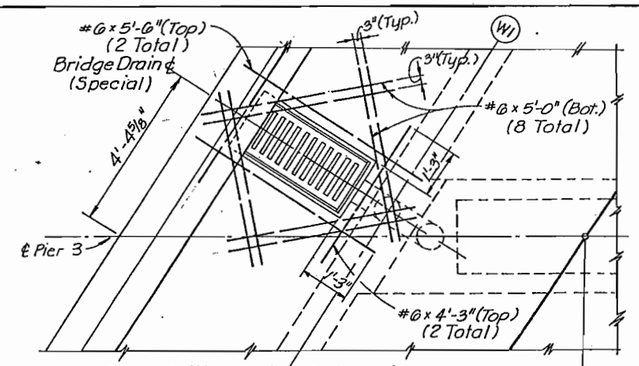

The additional Reinf. shown is Typical for all Bridge Drains

PLAN PIER 3

Sta. 601+44.00
Ramp E

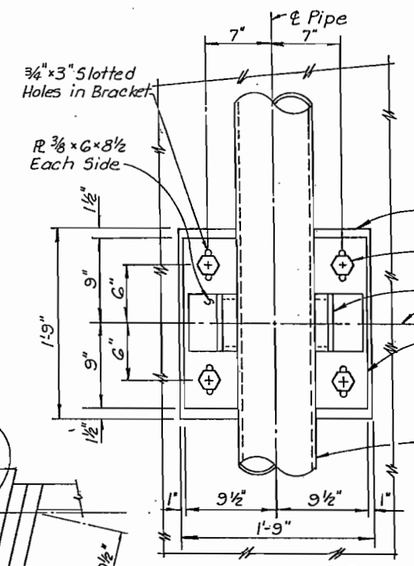

SECTION B-48 C

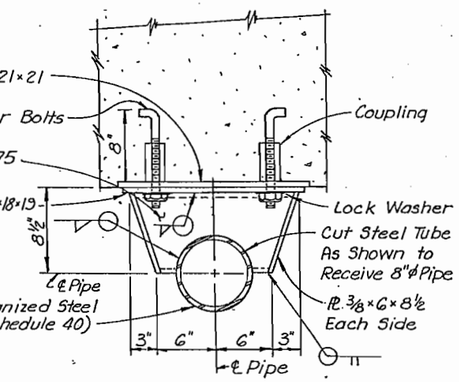

SECTION B-48 D

SUPPORT BRACKET
(Galvanized after Fabrication)

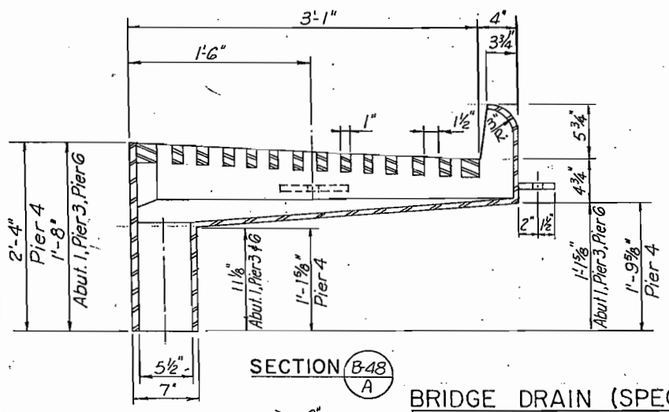

SECTION B-48 A

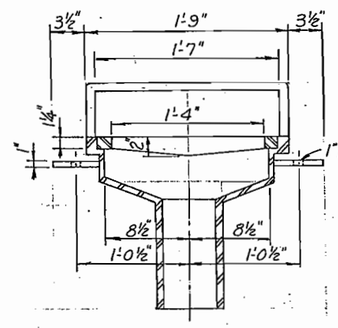

SECTION B-48 B

BRIDGE DRAIN (SPECIAL)

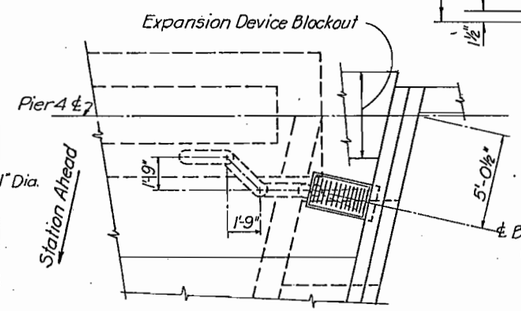

PLAN PIER 4

DRAINAGE NOTES

1. For Location of Bridge Drains, See Construction Layout.
2. Cut Slab Reinforcing Bars to Clear Bridge Drains. Additional #6 Bars Shall Be Set Between Top And Bottom Slab Bars. Bend Bridge Rail Reinf.
3. Cost of Furnishing And Installing 8" ø Pipe, Splash Blocks, Support Brackets, Bridge Drains, Riprap (Special), Plastic Filter Cloth, And Other Necessary Drainage System Incidentals Shall Be Included in Bridge Drain (Special).

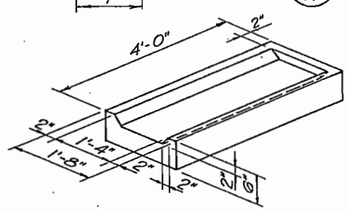

SPLASH BLOCK DETAIL

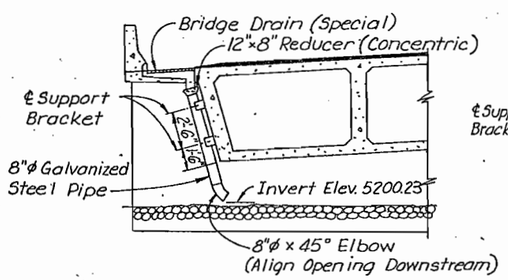

ABUTMENT 1
(Looking Back on Stationing)

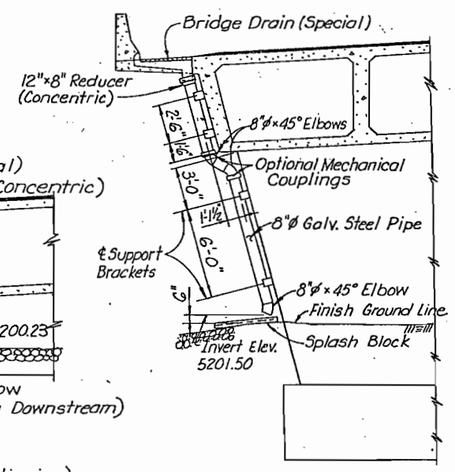

PIER 3
(Looking Ahead on Stationing)

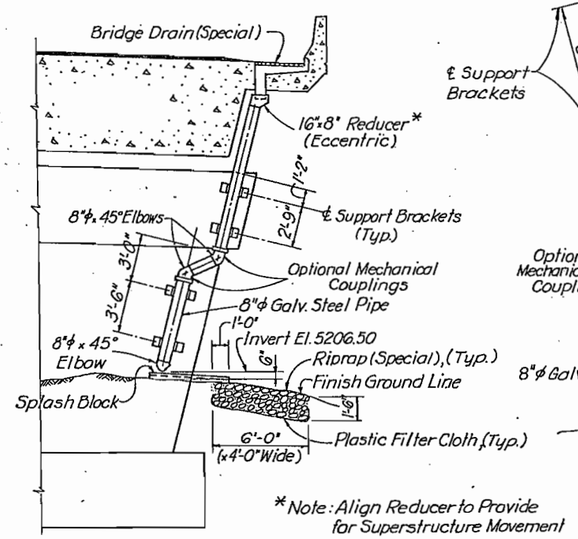

*Note: Align Reducer to Provide for Superstructure Movement

PIER 4
(Looking Back on Stationing)

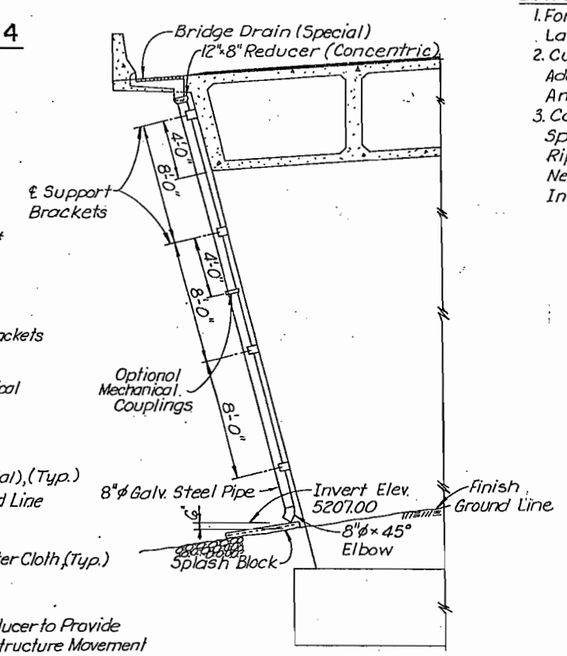

PIER 6
(Looking Ahead on Stationing)

De Leuw, Cather & Company — Denver, CO.

DIVISION OF HIGHWAYS

BRIDGE DRAINAGE DETAILS

Designer J. Stapleton		Structure Numbers	F-16-NK
Detailer R. Hinshaw			F-16-OE
Drawing Number B-48	of 50	Drawings	

INITIAL	DATE	CHECKED BY	QUANTITIES BY	CHECKED BY
J.L.S.	11-85	J.L.S.	R.M.H.	11-85
J.L.S.	11-85	R.M.H.	11-85	

DESIGNED BY
CHECKED BY
DETAILED BY

Revision Dates (Preliminary Stage Only)

'E OF COLORADO
'E DEPARTMENT OF HIGHWAYS
SION OF HIGHWAYS:
). H. FORM NO.126:
. FEB. 1984

BENT LINE DESCRIPTION OR FRACTIONAL POINT DESIGNATION	STATION	OFFSET	ELEVATION	COORDINATES FROM LAYOUT LINE		BENT LINE LENGTH FROM Y-AXIS OR OFFSET FROM EXTERIOR GIRDER	GIRDER LINE LENGTH
				OFFSET X	ORDINATE Y		
LONGITUDINAL LINE: NORTH OUTSIDE EDGE OF DECK							
CL BRG A1	706+70.750	-34.500	5212.631	-12.013	-383.221	-15.682	
CL PIER 2	707+81.159	-35.119	5214.932	-33.673	-267.571	-43.950	
CL PIER 3	601+37.272**	-9.965	5219.051	-48.045	-150.535	-62.718	
CL BRG P4	602+79.310*	-10.500	5224.171	-78.053	-15.263	-79.257	
LONGITUDINAL LINE: WEB 1							
CL BRG A1	706+73.021	-29.000	5212.293	-7.413	-379.361	-9.677	0.000
CL PIER 2	707+84.788	-29.817	5214.868	-28.650	-263.357	-37.394	118.092
CL PIER 3	601+40.941**	-4.531	5219.243	-43.022	-146.320	-56.161	236.018
CL BRG P4	602+78.122*	-5.000	5224.474	-72.516	-14.287	-73.635	371.815
LONGITUDINAL LINE: WEB 2							
CL BRG A1	706+77.281	-19.000	5211.683	0.975	-372.323	1.272	0.000
CL PIER 2	707+91.568	-20.249	5214.801	-19.517	-255.697	-25.474	118.561
CL PIER 3	601+47.612*	5.349	5219.654	-33.890	-138.657	-44.240	236.487
CL BRG P4	602+76.045*	5.000	5225.016	-62.458	-12.513	-63.422	366.286
LONGITUDINAL LINE: WEB 3							
CL BRG A1	706+81.721	-9.000	5211.071	9.394	-365.259	12.263	0.000
CL PIER 2	707+98.594	-10.777	5214.802	-10.385	-248.037	-13.554	119.013
CL PIER 3	601+54.284*	15.230	5220.075	-24.757	-130.994	-32.318	236.938
CL BRG P4	602+74.071*	15.000	5225.425	-52.410	-10.741	-53.219	360.740
LONGITUDINAL LINE: WEB 4							
CL PIER 3	601+60.955*	25.110	5220.373	-15.625	-123.331	-20.397	18.582
CL BRG P4	602+72.191*	25.000	5225.341	-42.372	-8.971	-43.026	136.390
LONGITUDINAL LINE: WEB 5							
CL BRG P4	602+70.399*	35.000	5225.261	-32.343	-7.203	-32.842	64.559

*RAMP E STATIONING. DECK ELEVATION IS BASED ON RAMP E PROFILE.
**RAMP E STATIONING. DECK ELEVATION IS BASED ON RAMP F PROFILE.

BENT LINE DESCRIPTION OR FRACTIONAL POINT DESIGNATION	STATION	OFFSET	ELEVATION	COORDINATES FROM LAYOUT LINE		BENT LINE LENGTH FROM Y-AXIS OR OFFSET FROM EXTERIOR GIRDER	GIRDER LINE LENGTH
				OFFSET X	ORDINATE Y		
LONGITUDINAL LINE: WEB 6							
CL BRG P4	710+40.487	-24.000	5226.454	-24.000	-5.732	-24.370	25.572
LONGITUDINAL LINE: WEB 7							
CL PIER 2	707+97.110	-12.736	5214.795	-12.281	-249.628	-16.030	0.000
CL PIER 3	709+24.621	-13.561	5220.673	-13.561	-121.599	-17.703	128.039
CL BRG P4	710+42.250	-14.000	5226.744	-14.000	-3.969	-14.216	245.675
LONGITUDINAL LINE: WEB 8							
CL BRG A1	706+84.709	-2.500	5210.689	14.885	-360.651	19.431	0.000
CL PIER 2	708+05.009	-2.500	5214.862	-2.323	-241.275	-3.032	120.884
CL PIER 3	709+32.942	-3.645	5221.273	-3.645	-113.279	-4.758	248.889
CL BRG P4	710+44.015	-4.000	5227.033	-4.000	-2.205	-4.062	359.967
LONGITUDINAL LINE: WEB 9							
CL BRG A1	706+89.472	7.500	5210.137	23.362	-353.538	30.497	0.000
CL PIER 2	708+13.129	7.500	5215.014	7.527	-233.013	9.825	121.856
CL PIER 3	709+41.263	6.272	5221.904	6.272	-104.957	8.188	249.916
CL BRG P4	710+45.778	6.000	5227.323	6.000	-0.442	6.093	354.436
LONGITUDINAL LINE: WEB 10							
CL BRG A1	706+94.449	17.500	5209.630	31.878	-346.392	41.614	0.000
CL PIER 2	708+21.546	17.469	5215.253	17.469	-224.674	22.801	122.882
CL PIER 3	709+49.584	16.189	5222.535	16.189	-96.636	21.133	250.921
CL BRG P4	710+47.541	16.000	5227.612	16.000	1.321	16.247	348.882
LONGITUDINAL LINE: SOUTH OUTSIDE EDGE OF DECK							
CL BRG A1	706+97.284	23.500	5209.372	36.579	-342.447	47.751	
CL PIER 2	708+26.121	22.923	5215.412	22.923	-220.099	29.919	
CL PIER 3	709+54.161	21.643	5222.883	21.643	-92.059	28.253	
CL BRG P4	710+48.511	21.500	5227.771	21.500	2.291	21.832	

Note:
1) Elevations are at top of concrete deck. 0.1667 Ft. below finished grade.
2) See Drwg. B-8 & B-9 for layout of Webs.

FED.ROAD REGION	DIVISION	PROJ. NO.	SHEET NO.	SHEET TOTALS
VIII	COLO.	IR25-2(187)	140	177

REVISIONS

AS CONSTRUCTED
NO REVISIONS 9/30/87 REVISED VOID

NOTES:
1. Contour Elevations Are Top of Concrete Deck, 0.1667' Below Finished Grade.
2. Contour Interval = 0.5'
3. Contours Do Not Include Camber Or Allowance For Falsework Settlement. (See Dwg. No. B-39 For Camber Diagram.)
4. A Deck Contour Drawing And An Approach Contour Drawing Having a Scale of 1"=4'-0" And A Contour Interval of 0.10' Will Be Supplied For Use During Construction.

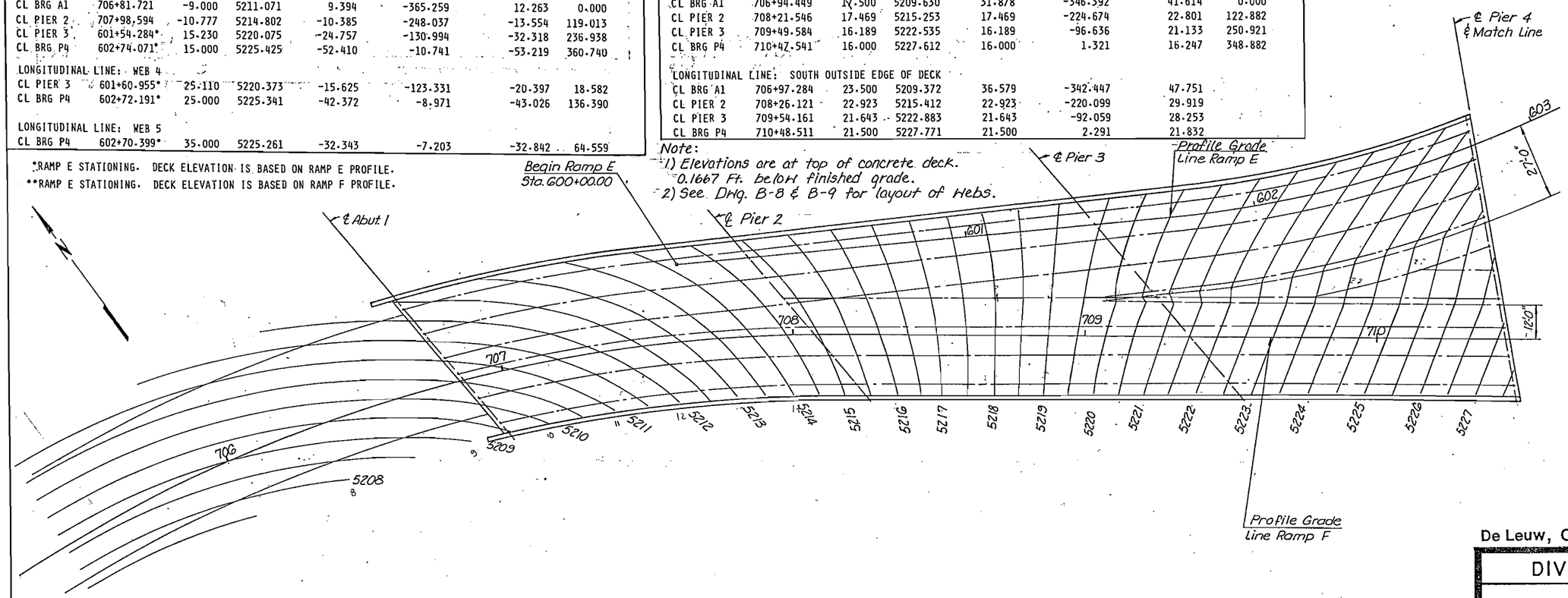

INITIAL	DATE		
DESIGNED BY	V.P.	9-85	CHECKED BY V.P. 9-85
CHECKED BY	R.M.H.	9-85	QUANTITIES BY R.M.H. 11-85
DETAILED BY	R.M.H.	9-85	CHECKED BY

De Leuw, Cather & Company Denver, CO.

DIVISION OF HIGHWAYS

BRIDGE DECK ELEVATIONS AND DECK/APPROACH CONTOURS

Designer V. Patel
Detailer R. Hinshaw
Structure Numbers F-16-NK
Drawing Number B-49 of 50 Drawings

Revision Dates (Preliminary Stage Only)

E OF COLORADO
E DEPARTMENT OF HIGHWAYS
SION OF HIGHWAYS:
). H. FORM NO. 126:
FEB. 1984

BENT LINE DESCRIPTION OR FRACTIONAL POINT DESIGNATION	STATION	OFFSET	ELEVATION	COORDINATES FROM LAYOUT LINE		BENT LINE LENGTH FROM Y-AXIS OR OFFSET FROM EXTERIOR GIRDER	GIRDER LINE LENGTH
				OFFSET X	ORDINATE Y		
LONGITUDINAL LINE: NORTH OUTSIDE EDGE OF DECK							
CL BRG P4	710+43.531	-23.758	5226.614	-23.758	-2.689	-24.125	
CL PIER 5	711+63.110	-19.500	5231.980	-19.500	116.890	-19.500	
CL PIER 6	713+13.110	-19.500	5236.376	-24.006	264.960	-24.108	
CL PIER 7	714+63.110	-19.500	5239.392	-47.574	410.256	-48.858	
CL BRG A8	715+84.360	-19.500	5240.994	-81.025	524.867	-85.422	
LONGITUDINAL LINE: WEB 1							
CL BRG P4	710+44.511	-18.202	5226.774	-18.202	-1.710	-18.483	0.000
CL PIER 5	711+63.110	-14.000	5232.134	-14.000	116.890	-14.000	118.701
CL PIER 6	713+13.110	-14.000	5236.705	-18.529	265.465	-18.608	267.414
CL PIER 7	714+63.110	-14.000	5239.722	-42.219	411.509	-43.358	415.484
CL BRG A8	715+84.360	-14.000	5241.147	-75.808	526.609	-79.922	535.439
LONGITUDINAL LINE: WEB 2							
CL BRG P4	710+46.521	-6.801	5227.104	-6.801	0.301	-6.906	0.000
CL PIER 5	711+63.110	-4.000	5232.414	-4.000	116.890	-4.000	116.633
CL PIER 6	713+13.110	-4.000	5237.306	-8.572	266.383	-8.608	266.265
CL PIER 7	714+63.110	-4.000	5240.322	-32.482	413.786	-33.358	415.714
CL BRG A8	715+84.360	-4.000	5241.424	-66.323	529.776	-69.922	536.594

BENT LINE DESCRIPTION OR FRACTIONAL POINT DESIGNATION	STATION	OFFSET	ELEVATION	COORDINATES FROM LAYOUT LINE		BENT LINE LENGTH FROM Y-AXIS OR OFFSET FROM EXTERIOR GIRDER	GIRDER LINE LENGTH
				OFFSET X	ORDINATE Y		
LONGITUDINAL LINE: WEB 3							
CL BRG P4	710+48.531	4.599	5227.434	4.599	2.311	4.670	0.000
CL PIER 5	711+63.110	6.000	5232.694	6.000	116.890	6.000	114.588
CL PIER 6	713+13.110	6.000	5237.906	1.386	267.300	1.392	265.139
CL PIER 7	714+63.110	6.000	5240.922	-22.744	416.063	-23.358	415.966
CL BRG A8	715+84.360	6.000	5241.701	-56.838	532.943	-59.922	537.771
LONGITUDINAL LINE: WEB 4							
CL BRG P4	710+50.541	16.000	5227.763	16.000	4.321	16.247	0.000
CL PIER 5	711+63.110	16.000	5232.974	16.000	116.890	16.000	112.565
CL PIER 6	713+13.110	16.000	5238.506	11.344	268.217	11.392	264.035
CL PIER 7	714+63.110	16.000	5241.522	-13.007	418.341	-13.358	416.241
CL BRG A8	715+84.360	16.000	5241.979	-47.352	536.110	-49.922	538.972
LONGITUDINAL LINE: SOUTH OUTSIDE EDGE OF DECK							
CL BRG P4	710+51.511	21.500	5227.921	21.500	5.291	21.832	
CL PIER 5	711+63.110	21.500	5233.128	21.500	116.890	21.500	
CL PIER 6	713+13.110	21.500	5238.836	16.821	268.722	16.892	
CL PIER 7	714+63.110	21.500	5241.852	-7.652	419.593	-7.858	
CL BRG A8	715+84.360	21.500	5242.131	-42.135	537.852	-44.422	

FED.ROAD REGION	DIVISION	PROJ. NO.	SHEET NO.	SHEET TOTALS
VIII	COLO.	IR25-2(187)	141	~~170~~ 177

REVISIONS

AS CONSTRUCTED

NO REVISIONS 9/30/87 REVISED VOID

NOTES:

1. Contour Elevations Are Top of Concrete Deck, 0.1667' Below Finished Grade.
2. Contour Interval = 0.5'
3. Contours Do Not Include Camber or Allowance For Falsework Settlement. (See Dwg. No. B-39 For Camber Diagram.)
4. A Deck Contour Drawing And An Approach Contour Drawing Having A Scale of 1"=4'-0" And A Contour Interval of 0.10' Will Be Supplied For Use During Construction.

Note:
1) Elevations are at top of concrete deck. 0.1667 Ft. below finished grade.
2) See Dwg. B-10 & B-11 for layout of Webs.

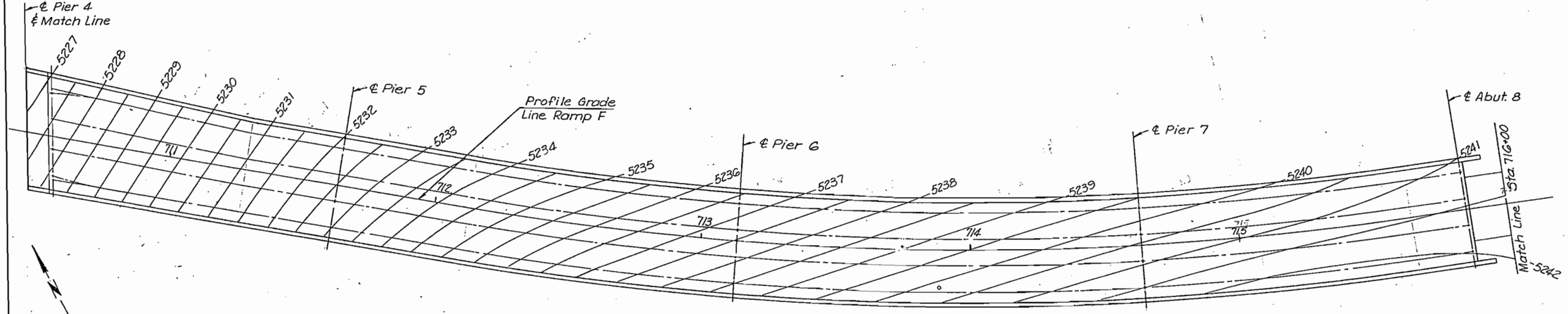

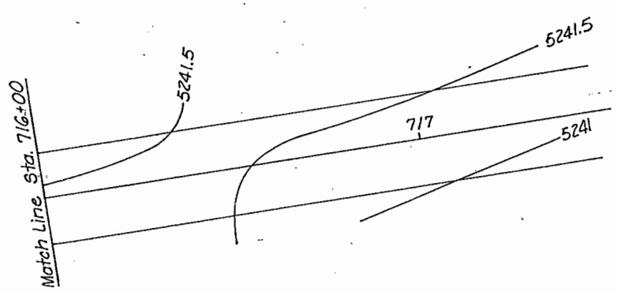

	INITIAL	DATE	CHECKED BY	V.P.	9-5
DESIGNED BY	V.P.	9-85	QUANTITIES BY	R.M.H.	11-85
CHECKED BY	R.M.H.	9-85	CHECKED BY		
DETAILED BY					

De Leuw, Cather & Company Denver, CO.

DIVISION OF HIGHWAYS

BRIDGE DECK ELEVATIONS AND DECK/APPROACH CONTOURS

Designer V. Patel
Detailer R. Hinshaw
Structure Numbers F-16-OE
Drawing Number B-50 of 50 Drawings

Revision Dates (Preliminary Stage Only)