STATE OF COLORADO
STATE DEPARTMENT OF HIGHWAYS
DIVISION OF HIGHWAYS
O. O. H. FORM NO. 1261
REV. FEB. 1984

STAPLETON

STATE DEPARTMENT OF HIGHWAYS
DIVISION OF HIGHWAYS - STATE OF COLORADO

P.E., R.O.W. & UTILITIES UNDER IR25-2(174)

FED. ROAD REGION	DIVISION	PROJ. NO.	SHEET NO.	SHEET TOTALS
VIII	COLORADO	IR 25-2(208)	1	

AS CONSTRUCTED

NO REVISIONS ☐ REVISED ☐ VOID ☐

REVISIONS

PLAN AND PROFILE OF PROPOSED

FEDERAL AID PROJECT NO. IR 25-2(208)

STATE HIGHWAY NOS. 6 & 25

DENVER COUNTY

SCALES OF ORIGINAL DRAWINGS

ON PLAN, 1IN. =50 FT.
ON PROFILE 1IN. =50 FT. HORIZONTAL
1IN. =10 FT. VERTICAL

GRADE LINE ON PROFILE IS SHOWN AS GRADE OF FINISHED ROAD

TABULATION OF LENGTH AND DESIGN DATA

STATION	STRUCTURE LIN. FT.	STRUCTURE MILE	ROADWAY LIN. FT.	ROADWAY MILE
RAMP "G"				
STRUCTURE NO. F-16-OL 803+18.00 TO 815+11.75	1,193.75	0.2261		
815+11.75 TO 817+53.59			241.84	0.0458
AUXILIARY LANE 300+00.00 TO 334+40.00 (MP 208.13)			3,440.00	0.6515
DETOUR REMOVAL 268+84.70 TO 275+50.00 (MP 209.38)			665.30	0.1260

SUMMARY	LIN. FT.	MILES
ROADWAY	4,347.14	0.8233
MAJOR STRUCTURE	1,193.75	0.2261
PROJECT GROSS LENGTH	5,540.89	1.0494

DESIGN DATA	RAMP "G"
MAXIMUM DEGREE OF CURVE	14°19'26"
MAXIMUM GRADE	4.50%
MINIMUM S.S.D. HORIZONTAL	236'
MINIMUM S.S.D. VERTICAL	321'
MAXIMUM DESIGN SPEED	35 MPH

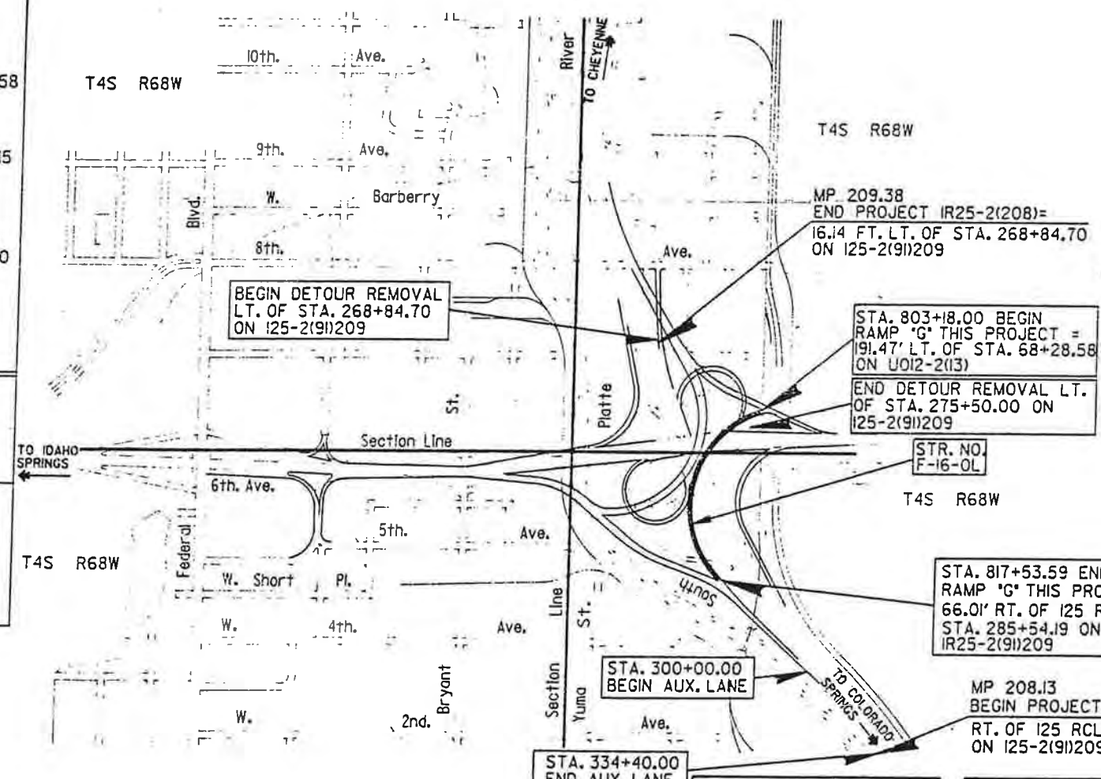

CITY OF DENVER
ORIGINAL SCALE IN FEET

500 0 500 1000
SCALE IN FEET
1" = 500'

INDEX OF SHEETS

SHEET NO.	
1	TITLE SHEET
2	STANDARD PLANS LIST
3	I25/6TH AVE. INTERCHANGE CONTROL POINTS
4	I25/6TH AVE. INTERCHANGE CONTROL POINT DIAGRAM
5	I25/6TH AVE. IMPROVEMENTS
6	2000 TRAFFIC DIAGRAM & GENERAL NOTES
7-8	TYPICAL SECTIONS
9-13	SUMMARY OF APPROXIMATE QUANTITIES
14	SUMMARY OF EARTHWORK, TABULATION OF GUARD RAIL, TABULATION OF CURB & GUTTER
15	TABULATION OF SURFACING QUANTITIES
16-17	TABULATION OF REMOVE, ADJUST, AND RESET ITEMS
18	TABULATION OF STORM SEWER SYSTEM
19-22	CONSTRUCTION STAGING PLANS
23	GEOMETRIC LAYOUT
24-25	GEOMETRIC PLAN W. 6TH AVE.
26	PLAN & PROFILE RAMP "G"
27	PLAN & PROFILE DETOURS (REMOVAL)
28	GEOMETRIC PLAN RAMP "F" ENTRANCE TO I-25
29-31	GEOMETRIC PLAN I-25 SOUTHBOUND AUXILIARY LANE
32	GEOMETRIC PLAN RAMP "B"
33	PROFILE RAMP "B"
34-40	DRAINAGE & UTILITY PLANS
41-42	DRAINAGE CROSS SECTIONS
43	DRAINAGE AND BARRIER DETAILS
44-45	IMPACT ATTENUATOR DETAILS
46-47	SURVEY MONUMENTS
48-49	GRADING PLAN AND SEEDING LIMITS
50-52	LANDSCAPE PLANS
53-55	IRRIGATION PLANS
56-60	LIGHTING PLANS AND DETAILS
61-73	SIGNING AND PAVEMENT MARKING PLANS
74-83	SIGNING AND PAVEMENT MARKING DETAILS
84-90	RETAINING WALLS
91-147	STRUCTURE F-16-OL
148-149	BRIDGE RAIL & BARRIERS (STRUCTURE F-16-DU AND F-16-EJ)

NEW AND REVISED STANDARDS

M-606-12	GUARD RAIL TYPE 4, CONCRETE BARRIER (9 SHEETS)	2-18-83
M-203-11	SUPERELEVATION OF CURVES-DIVIDED HIGHWAYS-SHOULDER PIVOT (1 SHEET)	8-16-84
M-620-2	FIELD LABORATORY - CLASS 2 (1 SHEET)	5-25-88

DIVISION OF HIGHWAYS

APPROVED :

James E. Siebels 6-20-88
Asst. CHIEF ENGINEER DATE

De LEUW CATHER & COMPANY
DENVER, CO.

PROJECT MANAGER

DEPARTMENT OF TRANSPORTATION
FEDERAL HIGHWAY ADMINISTRATION

APPROVED _____ DATE

DIVISION ADMINISTRATOR

AS CONSTRUCTED INFORMATION

CONTRACTOR _____
ENGINEER _____
(Project or Resident)
PROJECT STARTED _____
PROJECT COMPLETED _____
AS CONSTRUCTED PLANS APPROVED _____
TITLE DATE

J.K.K. / Dist. VI / R.D.T.

AS CONSTRUCTED		
NO. REVISIONS	REVISED	VOID

FEDERAL ROAD REGION NO.	DIVISION	PROJECT NO.	SHEET NO.	TOTAL SHEETS
VIII	COLORADO	IR 25-2(208)	2	

	Plan No.	Title	Page
■	M-100-1	STANDARD SYMBOLS	1
■	M-107-1	TEMPORARY EROSION CONTROL	2
□	M-203-1	APPROACH ROADS, FLARING, CUT SLOPE TREATMENT, BRIDGE & CREST WIDENING	3
□	M-203-2	DITCH TYPES	4
□	M-203-10	SUPERELEVATION OF CURVES - CROWNED HIGHWAYS	5
□	M-203-12	SUPERELEVATION OF CURVES - STREETS	7
□	M-203-13	SUPERELEVATION OF CURVES - DIVIDED HIGHWAYS - CENTER PIVOT	8
■	M-206-1	EXCAVATION AND BACKFILL FOR STRUCTURES (2 SHEETS)	9
■	M-206-2	EXCAVATION AND BACKFILL FOR BRIDGES	11
■	M-214-1	PLANTING DETAILS	12
□	M-412-1	CONCRETE PAVEMENT JOINTS	13
□	M-504-1	STEEL CRIBBING	14
□	M-506-1	GABIONS AND SLOPE MATTRESS	15
□	M-510-1	STRUCTURAL PLATE CULVERT PIPE - H-20 LOADING (2 SHEETS)	16
□	M-601-1	SINGLE CONCRETE BOX CULVERT	18
□	M-601-2	DOUBLE CONCRETE BOX CULVERT	19
□	M-601-3	TRIPLE CONCRETE BOX CULVERT	20
□	M-601-10	HEADWALL FOR PIPE CULVERTS	21
□	M-601-11	TYPE "S" SADDLE HEADWALL FOR PIPE CULVERTS	22
■	M-601-12	HEADWALL, INTERCEPTING HEADWALL AND CULVERT OUTLET PAVING	23
□	M-601-20	WINGWALLS FOR PIPE OR BOX CULVERTS	24
□	M-603-1	METAL CULVERT PIPE - H-20 LOADING (2 SHEETS)	25
■	M-603-2	REINFORCED CONCRETE PIPE	27
□	M-603-3	PRECAST CONCRETE BOX CULVERT	28
■	M-603-10	CONCRETE AND METAL END SECTIONS	29
■	M-604-1	PIPE SEWER IN TRENCH	30
□	M-604-10	INLET, TYPE C	31
□	M-604-11	INLET, TYPE D	32
■	M-604-12	CURB INLET, TYPE R (2 SHEETS)	33
□	M-604-13	CONCRETE INLET, TYPE 13	35
□	M-604-20	MANHOLES	36
■	M-604-21	STEPS FOR MANHOLES & INLETS	37
□	M-606-1	GUARD RAIL, TYPE 3, W-BEAM (8 SHEETS)	38
□	M-606-2	GUARD RAIL, TYPE 3, W-BEAM FOR LOCAL ROADS & STREETS (4 SHEETS)	46
□	M-607-1	WIRE FENCES AND GATES (2 SHEETS)	52
□	M-607-2	CHAIN LINK FENCE (3 SHEETS)	54
□	M-607-3	BARRIER FENCE	57
□	M-607-4	DEER FENCE AND GATE (2 SHEETS)	58
□	M-607-10	PICKET SNOW FENCE	60
□	M-608-1	CURB RAMPS	61
■	M-609-1	CURBS AND GUTTERS	62
□	M-611-1	CATTLE GUARD - WELDED GRILL UNITS - 10' THRU 42' ROADWAYS (2 SHEETS)	63
■	M-613-1	HIGHWAY LIGHTING (2 SHEETS)	65
□	M-615-1	EMBANKMENT PROTECTOR, TYPES 3 & 4	67
□	M-615-2	EMBANKMENT PROTECTOR, TYPE 5	68
□	M-616-1	INVERTED SIPHON (ALSO USE M-603 OR M-604 AS REQUIRED)	69
□	M-620-1	FIELD LABORATORY - CLASS 1	70
□	M-620-11	FIELD OFFICE - CLASS 1	72
□	M-620-12	FIELD OFFICE - CLASS 2	73
■	S-612-1	TYPICAL DELINEATOR INSTALLATIONS (4 SHEETS)	75
■	S-614-1	TYPICAL GROUND SIGN PLACEMENT	79
■	S-614-2	CLASS I GROUND SIGN INSTALLATIONS	80
■	S-614-3	CLASS II GROUND SIGN INSTALLATIONS	81
■	S-614-4	CLASS III SIGNS, LAMINATED ALUMINUM PANELS AND POST SPACING TABLE (2 SHEETS)	82
■	S-614-5	BREAK-AWAY SIGN SUPPORT DETAILS FOR GROUND SIGNS (2 SHEETS)	84
□	S-614-6	CONCRETE FOOTINGS AND SIGN ISLANDS FOR CLASS III SIGNS (2 SHEETS)	86
■	S-614-10	TYPICAL MARKER ASSEMBLY INSTALLATIONS	88
□	S-614-11	MILEPOST SIGN AND INSTALLATION	89
■	S-614-12	STRUCTURE NUMBER INSTALLATION (BRIDGE INFORMATION SHEET)	90
□	S-614-13	STANDARD RAILROAD CROSSING SIGNS AND MARKINGS	91
■	S-614-20	TYPICAL POLE MOUNT SIGN INSTALLATION	92
■	S-614-21	CONCRETE BARRIER SIGN POST INSTALLATIONS	93
□	S-614-22	TYPICAL MULTI-SIGN INSTALLATIONS	94
■	S-614-30	INTERSTATE ROUTE MARKERS	95
■	S-614-31	U. S. & COLORADO ROUTE MARKERS	96
■	S-614-32	AUXILIARY MARKERS	97
■	S-614-40	TRAFFIC SIGNAL INSTALLATION DETAILS (3 SHEETS)	98
□	S-614-50	TRAFFIC CONTROLS FOR HIGHWAY CONSTRUCTION (4 SHEETS)	101
□	S-614-51	BARRICADES, DRUMS, CONCRETE BARRIER (TEMP) & VERTICAL PANELS	105
■	S-627-1	TYPICAL PAVEMENT MARKINGS (3 SHEETS)	106

THE STANDARD PLAN SHEETS INDICATED HEREON BY A MARKED BOX ARE TO BE USED TO CONSTRUCT THIS PROJECT.

DEPARTMENT OF HIGHWAYS
STATE OF COLORADO
DIVISION OF HIGHWAYS

STANDARD PLANS LIST

M & S STANDARDS — JANUARY, 1982

AS CONSTRUCTED	FED.ROAD REGION	DIVISION	PROJ. NO.	SHEET NO.	SHEET TOTALS
NO REVISIONS ☐ REVISED ☐ VOID ☐	VIII	COLO.	IR 25-2(208)	3	

MODIFIED STATE PLANE CONTROL POINTS SHOWN ON INTERCHANGE CONTROL POINT DIAGRAM

CONTROL POINT #	NORTHING	EASTING	CONTROL POINT #	ELEV.	DESCRIPTION
1	688025.4089	2138794.9997	1		RANDOM SET 60D NAIL WEST OF RR TRACK AT QUIVAS AND 3RD AVE
13	688545.7433	2137946.6341	13	5235.23	(TBM 949-57) SET 40D NAIL WEST SIDE OF I-25 SOUTH OF 6TH AVE #5 REBAR W/ALUM CAP STAMPED "13"
19	691049.9066	2135992.5343	19		SET 60D NAIL @ S.W. COR OF R.R. CROSSING AND 8TH AVE.
20	691109.6542	2136803.5939	20		SET 60D NAIL AT N.W. COR 8TH AND WTANDOT
21	690640.3086	2136836.8304	21	5213.77	(TBM 949-51C) #5 REBAR W/ALUM CAP STAMPED "21"
22	689504.5126	2136545.0702	22	5205.02	(TBM 949-57E) #5 REBAR W/ALUM CAP STAMPED "22"
23	689556.6237	2133792.7917	23		CHISELED "X" ON WALK AT 6TH AND FEDERAL
24	690335.8090	2137084.0945	24		SET 60D NAIL P.O.L. BET. 21 & 151
25	690422.9322	2137106.6080	25	5198.42	(TBM 949-51B) FND. 1 1/4" AXLE IN DENVER R.B. AT 7TH AVE AND VALLEJO
26	691082.8686	2137114.3383	26		FND. PK NAIL AT 8TH AVE. AND VALLEJO
27	689109.9843	2136423.7212	27		FND. 1 1/2" AXLE IN A DENVER R.B. AT E. END 5TH AVE. AND R.R.
28	689107.5633	2135900.8383	28		FND. #8 REBAR IN A DENVER R.B. AT 5TH AVE. AND ALCOTT ST.
29	689493.4001	2135906.8505	29		SET P.K. NAIL AT APROX CL ALCOTT EXT ON RAMP FROM BRYANT ST.TO E. BOUND 6TH AVE.
30	689533.8188	2136265.8632	30		SET 60D NAIL AT 6TH AND WEST SIDE PLATTE
31	688600.1709	2137551.7582	31	5201.52	(TBM 949-57A) CHISELED "X" IN BIKE PATH
32	688773.7398	2137206.3225	32	5205.01	(TBM 949-57B) CHISELED "X" IN BIKE PATH
33	689051.6087	2136764.6278	33	5199.34	(TBM 949-57C) CHISELED "X" IN BIKE PATH
34	689270.8007	2136556.3551	34	5198.84	(TBM 949-57D) CHISELED "X" IN BIKE PATH
37	689106.0606	2135574.7182	37		FND #8 REBAR IN R.B.@ INT OF 5TH AND BRYANT STREET
38	689103.7469	2135087.5778	38		FND #8 REBAR IN R.B. IN 5TH AVE.
39	689101.2500	2134576.5460	39		FND ROUND HEAD SPIKE @ 5TH AVE AND RAMP TO 6TH AVE.
40	689376.0523	2134607.0171	40		SET 40D NAIL APPROX. 5' E OF TBC ON RAMP AND IN LINE W/N. BLDG LINE OF VALIANT PRODUCTS CORP.
151	689667.6073	2137626.6970	151		FND. PK NAIL IN ISLAND AT N. BOUND I-25 AND E. BOUND 6TH
501	688041.2818	2138760.7600	501	5218.31	SET 60D NAIL AT S. EDGE OF CONC. BASE OF S. BILLBOARD POST (HVC 19-17-1)
538	689671.3430	2133791.5282	538		FND. "X" CHISELED ON WALK ON E. SIDE BRIDGE ON FEDERAL AND CL 6TH
539	689671.1106	2133727.5162	539		FND. "X" CHISELED ON WALK ON W. SIDE BRIDGE ON FEDERAL AND 6TH AVE.
540	690425.2252	2137406.6892	540	5198.82	(TBM 949-51A) FND 1 1/4 AXLE IN DENVER R.B. AT 7TH AVE AND UMATILLA
541	689129.7372	2136391.5163	541		FND. PK NAIL IN ASPHALT N.WEST 5TH AND RR
542	689377.7607	2135937.5305	542		FND. #3 REBAR W/PLASTIC CAP DEST. W ALCOTT
543	689479.1452	2136272.4591	543		FND #4 REBAR NO CAP NE LOT COR SCHMID
567	689104.4801	2135241.9573	567		FND #8 REBAR W/CAP LS 152 1.5 FT S OF THE W END OF A CHAIN LINK FENCE
568	689102.9646	2134927.2873	568		FND #8 REBAR IN A RANGE BOX @ INT OF 5TH AND DALE CT. ON LINE WITH #38 &#39
569	689523.1309	2134749.9926	569		FND #3 REBAR W/CAP LS 152 1.5 FT S OF THE W END OF A CHAIN LINK FENCE
570	689277.4429	2135884.7251	570		FND CHISELED "X" ON TOP OF W CURB ALCOTT
648	689101.4278	2134601.3653	648		FND BOLT OR SPIKE 0.05 BELOW ASPHALT
898	691414.0806	2137223.4397	898		FND 1-1/4 AXLE IN RANGE BOX @ VALLEJO & BARBERRY
901	690197.0403	2137873.1081	901		FND 3" MONU LS 7104 IN SEARS WAREHOUSE INC FENCE LINE
902	690991.5755	2137856.9829	902		FND 1-1/4 AXLE IN SEARS WAREHOUSE FENCE LINE
2003	691915.9889	2135949.1192	2003	5199.07	FND 60 D NAIL AT 9TH AND ALCOTT ST. WEST OF COLO.AND SOUTHERN RR
2004	691846.9725	2137191.4133	2004	5198.07	FND P.K. AT COR OF CONC. PAN IN THE SW QUAD. OF MULBERRY AND VALLEJO ST. (HVC 4) BK. 705/5
2009	690383.1161	2135597.4886	2009	5199.99	FND P.K. AT BACK OF WALK SE QUAD. AT 7TH AND BRYANT (HVC 9) BK.705/3
2010	690899.9591	2138196.9533	2010	5215.50	FND HUB NE OF WAREHOUSE SE OF 8TH AND RARITAN ST. (HVC 10) BK.705/6
2015	689146.6983	2133843.3737	2015	5256.49	FND HUB SE BALLFIELD AT FEDERAL AND WEST 5TH (HVC15) BK. 705/2
2016	689121.2619	2135649.7893	2016	5203.69	FND P.K. IN BACK OF CURB AND PAN IN NE QUAD. AT 5TH AND BRYANT (HVC 16) BK. 705/2
2017	689032.7263	2137913.4845	2017	5205.11	FND HUB IN SE QUAD. OF 6TH I-25 INTERCHANGE (HVC 17) BK.705/1
2019	688862.5223	2136657.8344	2019	5205.44	FND HUB SW.QUAD OF 6TH AND I-25 SE TUMA ST AND WEST 5TH (HVC 19) BK. 705/2

CONTROL POINTS NOT SHOWN ON INTERCHANGE CONTROL POINT DIAGRAM

CONTROL POINT #	NORTHING	EASTING	CONTROL POINT #	ELEV.	DESCRIPTION
2	688081.0271	2140405.1242	2		CHISELED "X" ON WALK AT NE CORNER 3RD AND LIPAN
3	687116.2257	2140371.8492	3	5232.13	SET P.K. NAIL AT THE INTERSECTION OF CONC. PANS AT 1ST AND LIPAN (HVC 18-8-1) BK. 949/3
4	687141.8270	2141221.4826	4		SET 60 D NAIL AT 1ST AND SANTA FE
5	685569.3803	2141234.2059	5		SET 60 D NAIL AT NW COR RR CROSSING AND SANTA FE
6	684910.6002	2141490.5071	6		FND CHISELED "X" ON WALK AT NW COR OF BYERS PL. AND SANTA FE
7	684543.8651	2141767.4116	7		SET 60 D NAIL AT TOP OF RETAINING WALL AT SANTA FE AND ALAMEDA
8	684544.7222	2140615.6566	8		CHISELED "X" ON WALK AT PLATTE RIVER DRIVE AND ALAMEDA
9	685824.2478	2140201.7827	9		SET 60 D NAIL AT CURVE IN PLATTE RIVER DRIVE
10	685839.3331	2138396.1376	10		FOUND CHISELED "X" IN WALK AT NW COR RARITAN AND BAYAUD
11	686392.6988	2138461.4659	11		SET 60 D NAIL APPROX. 10 'E OF E TBC OF RARITAN ST.
12	686742.8168	2137743.9133	12		SET 60 D NAIL 1 'W OF W TBC ON TEJON AT APPROX. S FLOW LINE OF IRVINGTON EXTENDED
14	693202.2216	2136530.8428	14		SET 60 D NAIL WEST OF I-25 AND 12TH
15	693217.9493	2135941.2115	15		SET 40 D NAIL IN RR TIE ON W SIDE OF SOUTH PLATTE AND 12TH
16	693839.2213	2135769.8737	16		SET 40 D NAIL AT 13TH AND WEST SIDE OF SOUTH PLATTE
17	693814.6071	2136266.6299	17		SET 40 D NAIL AT SW COR 13TH AVE AND ZUNI ST.
18	693888.2350	2137364.8412	18		SET P.K. NAIL AT NE COR 13TH AND UMATILLA
35	694125.9943	2133755.3430	35		CHISELED "X" ON SIDEWALK ON E SIDE FEDERAL APPROX. 100'S OF HOWARD PL.
36	695078.5010	2133708.4583	36		FND CHISELED "X" ON THE W. FACE OF MEDIAN CURB IN FEDERAL BRIDGE OVER COLFAX, N1/4 COR SEC. 5.
502	684621.1313	2141602.1489	502	5228.06	SET P.K. NAIL ON BACK OF WALK AND SE COR OF CONC. GAS ISLAND AT STANDARD STATION AT SANTA FE AND ALAMEDA (HVC 18-7-1) BK. 949/3
503	684533.1715	2140431.3575	503	5220.65	SET 60 D NAIL AT COR OF CONC. WALK ON NORTH SIDE OF ALAMEDA ACROSS FROM LIPAN ST. (HVC 18-7-2) BK. 949/3
504	686294.7756	2138813.4477	504	5212.05	SET 40 D NAIL 1'E OF A FENCE COR, IN LINE WITH FENCE TO THE WEST (HVC 20-1-1) BK. 949/2
505	688013.1587	2138046.3811	505	5209.64	SET 60 D NAIL 1'W OF A POWER POLE (HVC 20-1-2) BK. 949/2
506	693279.2719	2136353.5773	506	5193.33	SET 40 D NAIL 1'W OF A POWER POLE AT SW COR RENT-IT BLDG. (HVC 21-8-3) BK.949/17
507	694128.7585	2136349.4173	507	5192.79	SET 40 D NAIL 1'W OF SW FENCE COR OF SIEGEL OIL CO. (HVC 21-8-2) BK. 949/17
508	694061.3072	2137369.1137	508	5194.12	SET 40 D NAIL 1'W OF A FENCE COR (HVC 20-8-2) BK.949/17
2001	693691.4757	2135787.1973	2001	5197.05	FOUND 60 D NAIL 1'N OF END OF FENCE AT 13TH AND WEST RIGHT OF WAY FENCE OF COLORADO AND SOUTHERN RAILROAD (HVC 1) BK. 705/4
2002	693243.7166	2137278.1433	2002	5195.66	FOUND P.K. NAIL AT WEST END OF PAINT STRIPE AT 12TH AND UMATILLA ST (HVC 2) BK. 705/5
2008	690361.6725	2133693.4541	2008	5252.81	FND HUB W FEDERAL @ 7TH AND BARNUM PARK (HVC 8)
2021	688900.3653	2139686.5017	2021	5221.12	FOUND HUB IN RAILROAD YARD AT NAVAJO AND BETWEEN 4TH AND 5TH (HVC 21) BK. 705/1
2022	687787.5973	2136559.6359	2022	5205.07	FND HUB @ YUMA ST AND 2ND (HVC 22) BK 705/2
2023	688015.7951	2139672.4343	2023	5224.54	FOUND HUB AT NAVAJO AND 3RD. (HVC 23) BK. 705/1

ALL COORDINATES SHOWN HEREON ARE MODIFIED STATE PLANE COORDINATES MODIFIED FROM THE POINT OF ORIGIN (N=0, E=2,000,000) AS FOLLOWS:
MEAN LATITUDE= 39° 39'30"
MEAN ELEVATION= 5500' AMSL
COMBINED FACTOR= 0.999721454

TO OBTAIN STATE PLANE COORDINATES:
1) MULTIPLY THE MODIFIED NORTHING BY THE COMBINED FACTOR TO OBTAIN THE STATE PLANE NORTHING.
2) MULTIPLY THE DIFFERENCE BETWEEN THE MODIFIED EASTING AND 2,000,000 BY THE COMBINED FACTOR AND THEN ADD THE 2,000,000 BACK IN TO OBTAIN THE STATE PLANE EASTING.
THIS CONTROL NETWORK IS BASED ON CONTROL ESTABLISHED BY MERRICK & CO. UNDER JOB NO 013 3531.

I 25 / 6th Ave.
INTERCHANGE
CONTROL POINTS

COLORADO REGISTERED PROFESSIONAL ENGINEER 22100 ... 85

STATE OF COLORADO
STATE DEPARTMENT OF HIGHWAYS
DIVISION OF HIGHWAYS:
D. O. H. FORM NO.126:
REV. FEB. 1984

AS CONSTRUCTED		
NO REVISIONS	REVISED	VOID

FED.ROAD REGION	DIVISION	PROJ. NO.	SHEET NO.	SHEET TOTALS
VIII	COLO.	IR 25-2(208)	4	

I 25 / 6th Ave.
INTERCHANGE
CONTROL POINT
DIAGRAM

STATE OF COLORADO
STATE DEPARTMENT OF HIGHWAYS
DIVISION OF HIGHWAYS
D. O. H. FORM NO. 126
REV. FEB. 1984

AS CONSTRUCTED						
NO REVISIONS		REVISED		VOID		

FED. ROAD REGION	DIVISION	PROJ. NO.	SHEET NO.	SHEET TOTALS
VIII	COLO.	IR 25-2(208)	5	

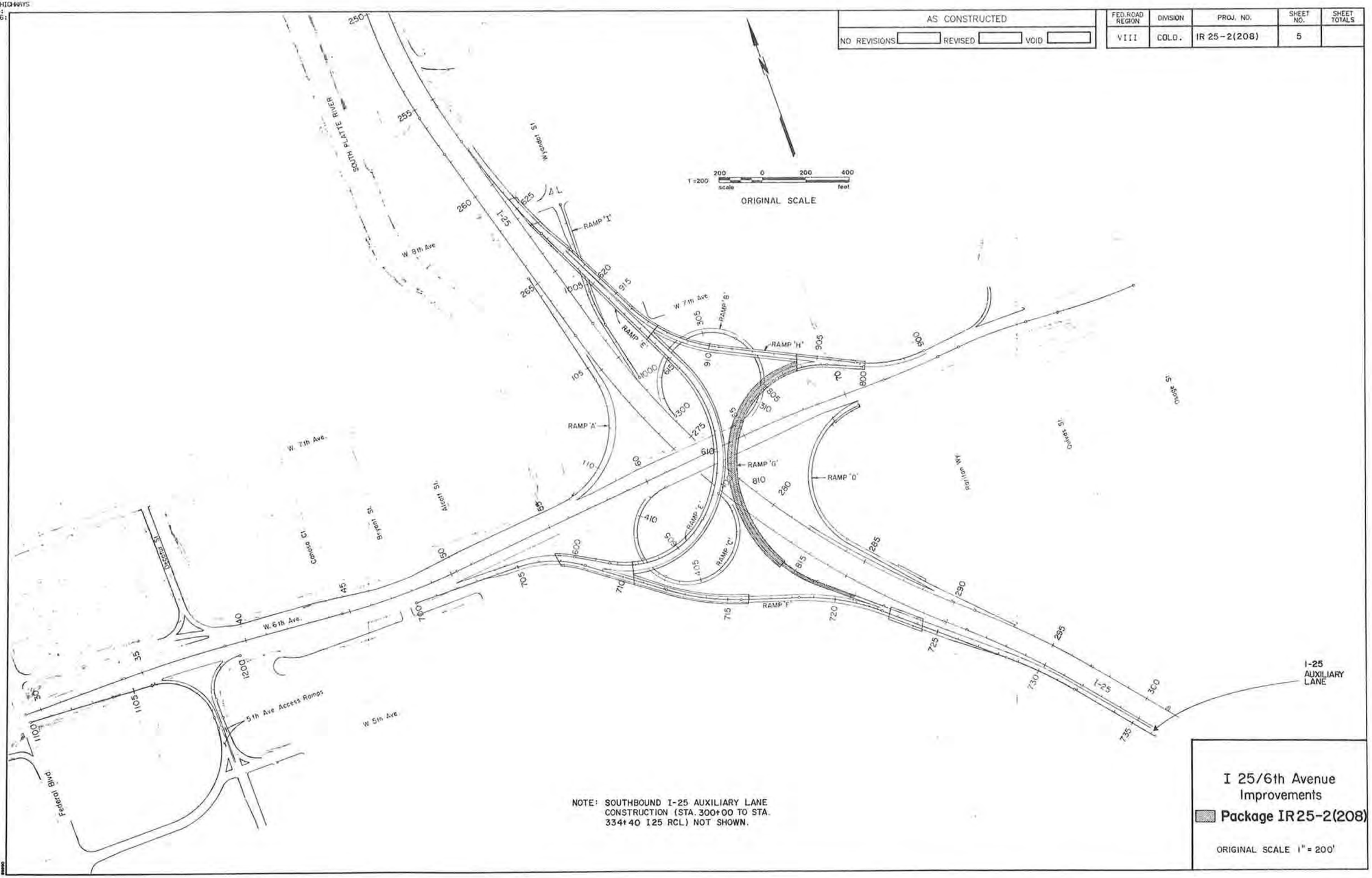

NOTE: SOUTHBOUND I-25 AUXILIARY LANE CONSTRUCTION (STA. 300+00 TO STA. 334+40 I25 RCL) NOT SHOWN.

I 25/6th Avenue Improvements

Package IR25-2(208)

ORIGINAL SCALE 1" = 200'

STATE OF COLORADO
STATE DEPARTMENT OF HIGHWAYS
DIVISION OF HIGHWAYS
D. O. H. FORM NO. 1267
REV. FEB. 1984

AS CONSTRUCTED						
NO. REVISIONS	REVISED	VOID	FED.ROAD REGION	DIVISION	PROJ. NO.	SHEET NO.	SHEET TOTALS
			VIII	COLO.	IR 25-2(208)	6	

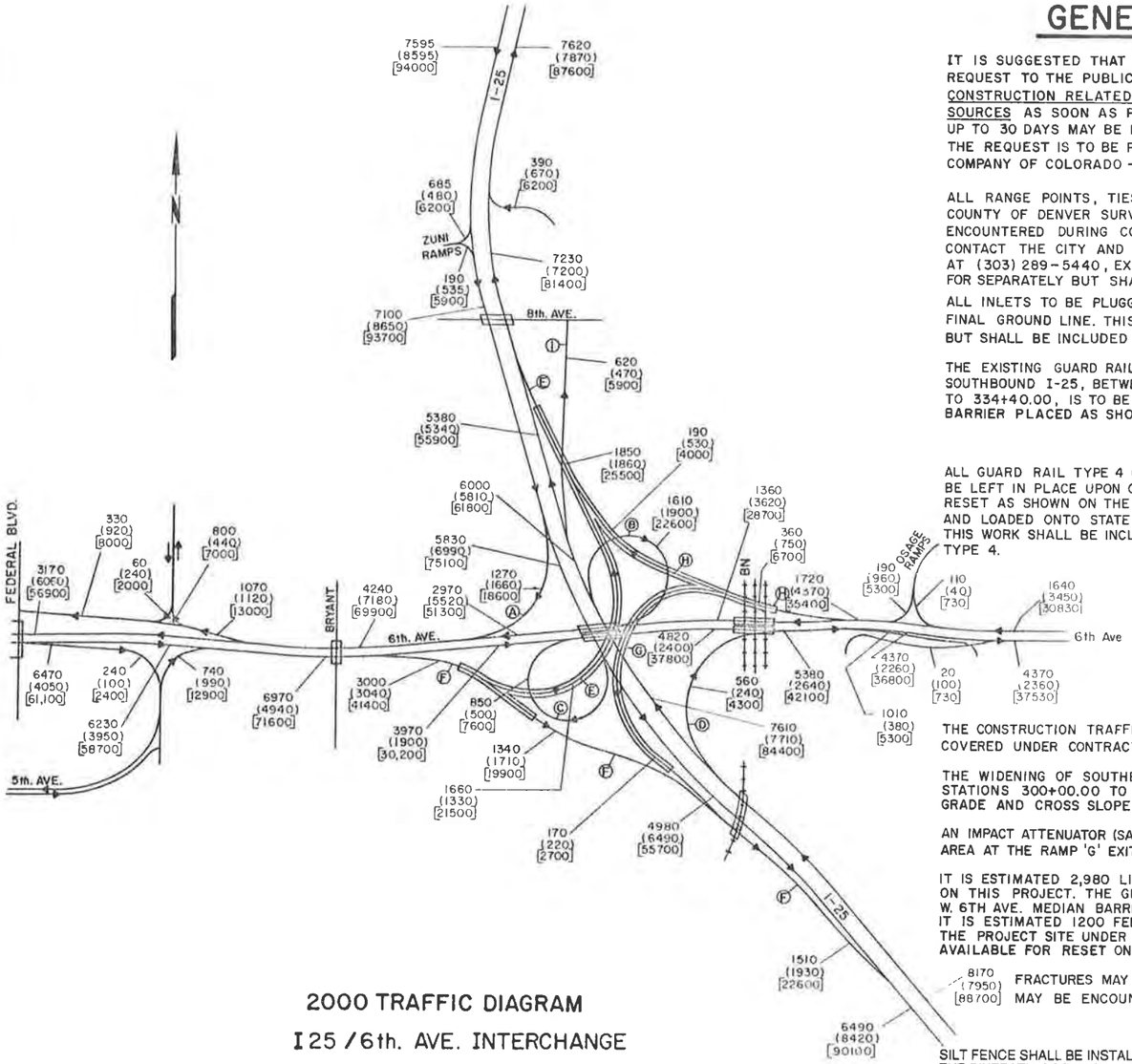

2000 TRAFFIC DIAGRAM

I 25 / 6th. AVE. INTERCHANGE

9020 = A.M. PEAK HOUR

(10300) = P.M. PEAK HOUR

[98,000] = AVERAGE DAILY TRAFFIC (DIRECTIONAL)

GENERAL NOTES

IT IS SUGGESTED THAT THE CONTRACTOR INITIATE A REQUEST TO THE PUBLIC SERVICE COMPANY FOR ANY CONSTRUCTION RELATED TEMPORARY ELECTRICAL POWER SOURCES AS SOON AS POSSIBLE. IN SOME INSTANCES UP TO 30 DAYS MAY BE REQUIRED TO PROVIDE THE SOURCES. THE REQUEST IS TO BE PROCESSED THROUGH PUBLIC SERVICE COMPANY OF COLORADO – STREET LIGHTING AT (303) 571-2505.

ALL RANGE POINTS, TIES, BENCHMARKS, OR OTHER CITY AND COUNTY OF DENVER SURVEY CONTROL POINTS WHICH MAY BE ENCOUNTERED DURING CONSTRUCTION MUST BE PRESERVED. CONTACT THE CITY AND COUNTY OF DENVER SURVEYOR AT (303) 289-5440, EXT. 333. THIS WORK WILL NOT BE PAID FOR SEPARATELY BUT SHALL BE INCLUDED IN THE WORK.

ALL INLETS TO BE PLUGGED SHALL BE REMOVED TO TWO FEET BELOW FINAL GROUND LINE. THIS WORK WILL NOT BE PAID FOR SEPARATELY BUT SHALL BE INCLUDED IN THE WORK.

THE EXISTING GUARD RAIL TYPES 3,4 & 5 ALONG THE RIGHT SIDE OF SOUTHBOUND I-25, BETWEEN APPROXIMATE STATIONS 300+00.00 TO 334+40.00, IS TO BE REMOVED AND REPLACED WITH TYPE 4 BARRIER PLACED AS SHOWN ON THE PLANS.

ALL GUARD RAIL TYPE 4 (PRECAST PORTABLE) NOT DESIGNATED TO BE LEFT IN PLACE UPON COMPLETION OF THE PROJECT SHALL BE RESET AS SHOWN ON THE PLANS OR STOCKPILED ON THE PROJECT SITE AND LOADED ONTO STATE VEHICLES, AS DIRECTED BY THE ENGINEER. THIS WORK SHALL BE INCLUDED IN THE COST OF RESET GUARD RAIL TYPE 4.

THE CONSTRUCTION TRAFFIC CONTROL FOR THIS PROJECT IS COVERED UNDER CONTRACT IR25-2(223).

THE WIDENING OF SOUTHBOUND I-25 BETWEEN APPROXIMATE STATIONS 300+00.00 TO 334+40.00 IS TO MATCH THE EXISTING GRADE AND CROSS SLOPE.

AN IMPACT ATTENUATOR (SANDWICH SYSTEM) WILL BE REQUIRED IN THE GORE AREA AT THE RAMP 'G' EXIT FROM RAMP 'H', AND AT PIER 10 G. SEE DETAIL.

IT IS ESTIMATED 2,980 LINEAR FEET OF GLARE SCREEN WILL BE RESET ON THIS PROJECT. THE GLARE SCREEN IS TO BE RESET ON THE W. 6TH AVE. MEDIAN BARRIER BETWEEN STATIONS 52+10 AND 83+00. IT IS ESTIMATED 1200 FEET OF GLARE SCREEN WILL BE STOCKPILED ON THE PROJECT SITE UNDER CONTRACT IR25-2(191) AND WILL BE AVAILABLE FOR RESET ON THIS PROJECT.

8170
(7950)
[88700]

FRACTURES MAY EXIST IN THE BEDROCK. GROUND WATER FLOW MAY BE ENCOUNTERED.

SILT FENCE SHALL BE INSTALLED BETWEEN SOUTHBOUND I-25 AND THE BIKEPATH, BETWEEN APPROX. STATIONS 306 + 00 AND 311+50, TO PREVENT ERODED EMBANKMENT MATERIAL AND DRAINAGE FLOWS FROM COVERING THE BIKEPATH OR ENTERING THE SOUTH PLATTE RIVER DURING CONSTRUCTION. THE SILT FENCE SHALL BE INSTALLED AND OPERATING PRIOR TO PLACEMENT OF NEW EMBANKMENT MATERIAL AND REMAIN IN PLACE UNTIL FINAL SEEDING AND JUTING OPERATIONS ARE COMPLETED. IT IS ESTIMATED 550 LIN. FT. OF SILT FENCE WILL BE REQUIRED ON THIS PROJECT.

IT IS ESTIMATED THAT 1200 LIN. FT. OF FENCE (TEMPORARY) WILL BE REQUIRED ON THE PROJECT AS DIRECTED BY THE ENGINEER.

THE PERMANENT TRAFFIC COUNTER AT APPROX. STA. 312+20.00 IS TO BE RESET TO APPROX. STA. 311+60.00 SEE SIGNING AND PAVEMENT MARKING PLANS FOR DETAILS.

PLAN QUANTITIES OF SURFACING MATERIALS ARE BASED ON THE FOLOWING UNIT WEIGHTS AND RATES OF APPLICATION.

PLANT MIXED SEAL COAT (TYPE B) AND HOT BITUMINOUS PAVEMENT (GRADING E & EX)@110 LBS./ SQ. YD./ INCH. EMULSIFIED ASPHALT (SLOW-SETTING) FOR TACK @ 0.10 GAL./ SQ. YD. (DILUTED). A B C (CL. 6)@ 1.8 TONS / CU. YD.

FOR QUANTITIES, DILUTED EMULSIFIED ASPHALT FOR TACK COAT WAS ESTIMATED AT 1 PART EMULSIFIED ASPHALT AND 1 PART WATER.

RATES OF APPLICATION SHALL BE AS DIRECTED BY THE ENGINEER AT THE TIME OF APPLICATION. RATES SHOWN ABOVE ARE APPROXIMATE AND ARE SUBJECT TO ADJUSTMENT ON CONSTRUCTION.

THE FOLLOWING SHALL BE FURNISHED WITH EACH BITUMINOUS PAVER:

1. A SKI TYPE DEVICE AT LEAST 30 FEET IN LENGTH.
2. SHORT SKI OR SHOE.
3. 1500 FEET OF CONTROL LINE AND STAKES. THE CONTROL LINE WILL BE REQUIRED FOR ALL LAYERS OR AS DIRECTED BY THE ENGINEER.

ANY LAYER OF BITUMINOUS PAVEMENT THAT IS TO HAVE A SUCCEEDING LAYER PLACED THEREON SHALL BE COMPLETED FULL WIDTH BEFORE SUCCEEDING LAYER IS PLACED.

WATER SHALL BE USED AS A DUST PALLIATIVE WHERE REQUIRED. LOCATIONS SHALL BE AS ORDERED. WATER USED FOR THIS PURPOSE WILL NOT BE PAID FOR SEPARATELY BUT SHALL BE INCLUDED IN THE WORK.

UTILITIES AS SHOWN ON PLAN AND PROFILE SHEETS ARE PLOTTED FROM THE BEST AVAILABLE INFORMATION. THE CONTRACTOR'S ATTENTION IS DIRECTED TO PARAGRAPH 107.18 OF THE STANDARD SPECIFICATIONS CONCERNING UTILITIES.

THE CONTRACTOR WILL CALL THE UTILITY NOTIFICATION CENTER OF COLORADO AT 534-6700 FOR UTILITY LOCATIONS PRIOR TO ANY DIGGING.

ALL DIMENSIONS, ELEVATIONS, AND RADII ARE TO EDGE OF DRIVING LANE (LIP OF GUTTER) UNLESS OTHERWISE NOTED.

TYPE OF COMPACTION FOR EMBANKMENT SHALL BE AASHTO T99.

DEPTH OF MOISTURE-DENSITY CONTROL FOR THIS PROJECT SHALL BE AS FOLLOWS:

FULL DEPTH OF ALL EMBANKMENTS.
BASES OF CUTS AND FILLS - 0.67 FT.
EXCAVATION REQUIRED FOR COMPACTION OF BASES OF CUTS AND FILLS WILL BE CONSIDERED AS SUBSIDIARY TO THAT OPERATION AND WILL NOT BE PAID FOR SEPARATELY.

THE MINIMUM THICKNESS OF TOPSOIL (HAUL) SHALL BE 4 INCHES. IT IS ESTIMATED THAT 3,227 CU. YDS. WILL BE REQUIRED. THE TOPSOIL IS TO BE CONTRACTORS SOURCE.

INTERSTATE RIGHT-OF-WAY FENCING SHALL BE MAINTAINED AT ALL TIMES AS DIRECTED BY THE ENGINEER. COST TO BE INCLUDED IN THE WORK.

A SUGGESTED SEQUENCE OF CONSTRUCTION CAN BE FOUND IN THE CONSTRUCTION STAGING PLANS. THIS SEQUENCE IS FOR INFORMATION ONLY. PRIOR TO BEGINNING CONSTRUCTION, THE CONTRACTOR IS TO SUBMIT A CONSTRUCTION SEQUENCING PLAN FOR ENGINEER'S APPROVAL.

ALL GUARD RAIL TYPE 5 REMOVED ON THIS PROJECT IS TO REMAIN THE PROPERTY OF THE STATE AND IS TO BE STOCKPILED ON THE PROJECT SITE.

THE CONTRACTOR SHALL LIMIT CONSTRUCTION ACTIVITIES TO THOSE AREAS WITHIN THE LIMITS OF DISTURBANCE AND/OR TOES OF SLOPE AS SHOWN ON THE PLANS AND CROSS SECTIONS. ANY DISTURBANCE BEYOND THESE LIMITS SHALL BE RESTORED TO ORIGINAL CONDITION BY THE CONTRACTOR AT HIS OWN EXPENSE. CONSTRUCTION ACTIVITIES, IN ADDITION TO NORMAL CONSTRUCTION PROCEDURES, SHALL INCLUDE THE PARKING OF VEHICLES OR EQUIPMENT, DISPOSAL OF LITTER AND ANY OTHER ACTION WHICH WOULD ALTER EXISTING CONDITIONS.

COLORADO
DEPARTMENT OF HIGHWAYS
FORM NO. 1261
1. 1984

AS CONSTRUCTED			FED. ROAD REGION	DIVISION	PROJ. NO.	SHEET NO.	SHEET TOTALS
NO REVISIONS	REVISED	VOID	VIII	COLO.	IR25-2(208)	7	

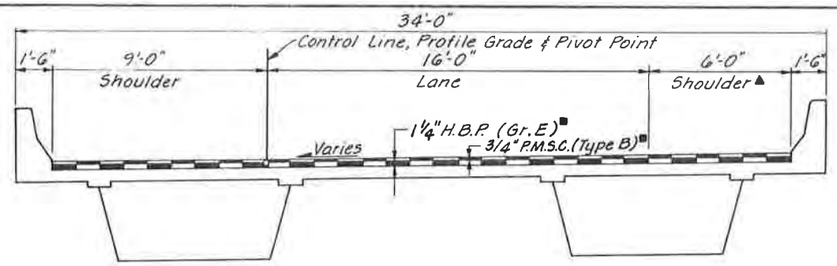

STA. 803+18.00 TO STA. 815+11.75
(BRIDGE STRUCTURE)

RAMP 'G'

▲ Shoulder Varies 10'-1⅛" to 6'-0" From 803+18.00 to 805+35.99

SLOPE SELECTION TABLE "A"

Slope	"H" Height of Cut	"H" Height of Fill
6:1	0'-10'	0'-10'
3:1	Over 10'	Over 10'

In Special Cases Slope May be Steepened as Directed by the Engineer.

■ Approximate Thickness

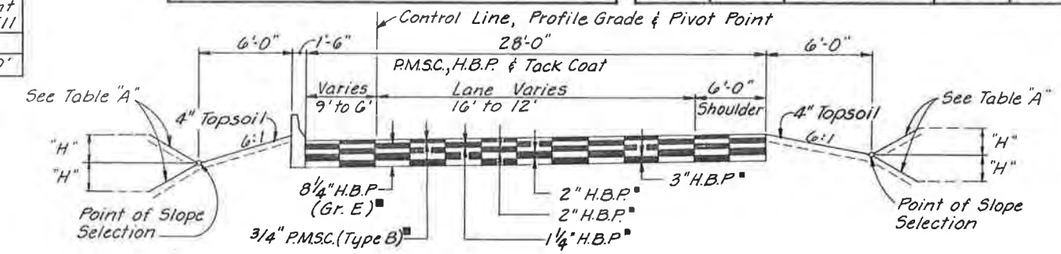

STA. 815+11.75 TO STA. 817+53.59

RAMP 'G'

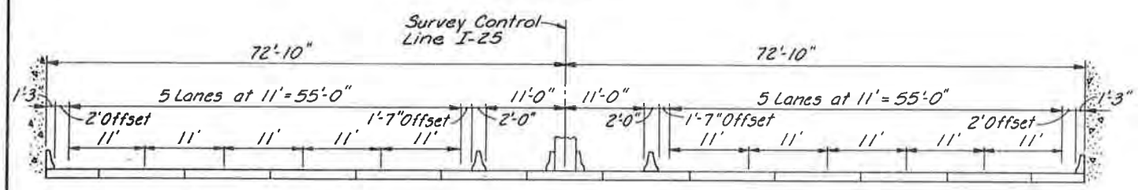

I25 UNDER 6TH AVE
DURING CONSTRUCTION

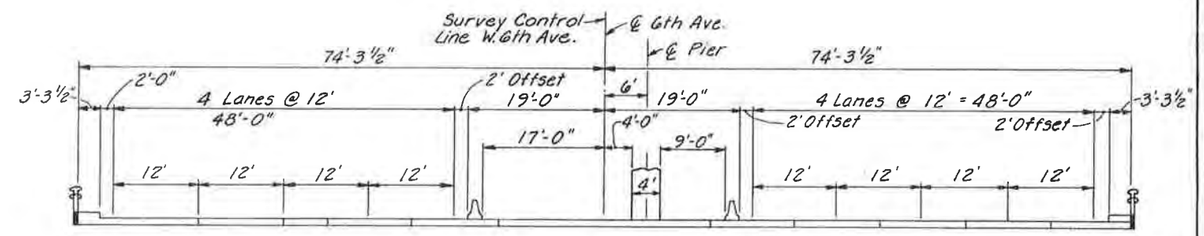

6TH AVE NEAR I25
DURING CONSTRUCTION

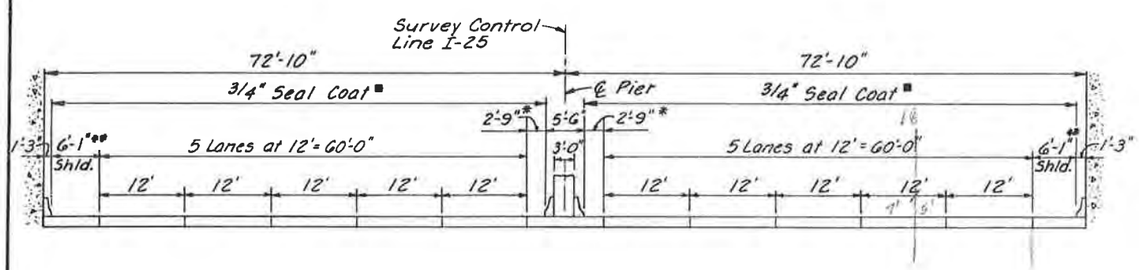

I25 UNDER 6TH AVE
FINAL CONFIGURATION

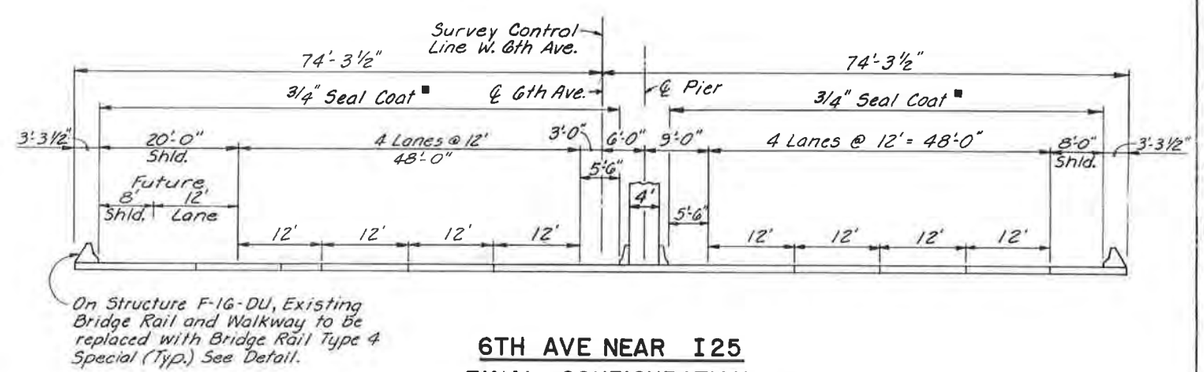

6TH AVE NEAR I25
FINAL CONFIGURATION

* Shoulder varies, 2'-1" min.
** Shoulder varies, 5'-6" min.

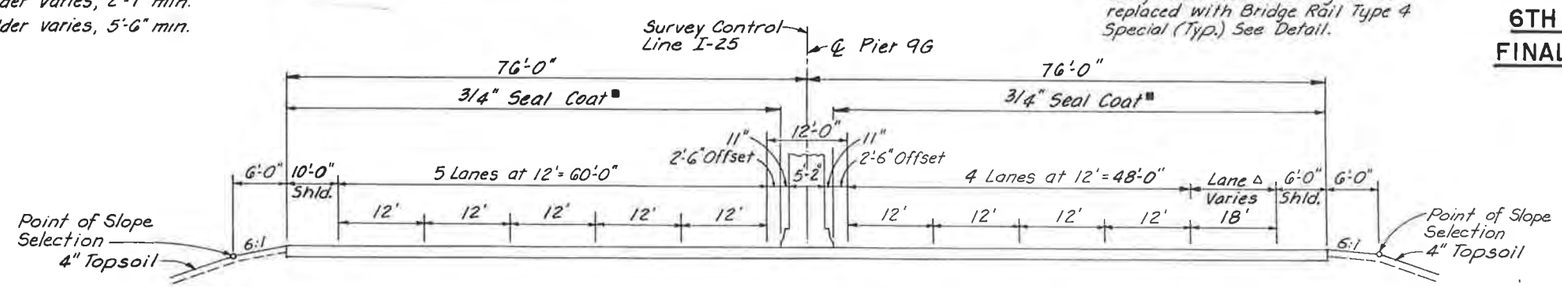

I25 AT RAMP "G" PIER
FINAL CONFIGURATION

△ Loop Ramp Exit Lane

NOTE:
I-25 Sections Looking South
6TH Ave Sections Looking East

RAMP 'G', 6TH AVE AND I25
TYPICAL SECTIONS

DeLeuw Cather & Company — Denver, Co.

STATE OF COLORADO
STATE DEPARTMENT OF HIGHWAYS
DIVISION OF HIGHWAYS:
D. O. H. FORM NO.1261
REV. FEB. 1964

AS CONSTRUCTED						
NO REVISIONS	REVISED	VOID	FED.ROAD REGION	DIVISION	PROJ. NO.	SHEET NO.	SHEET TOTALS
			VIII	COLO.	IR25-2(208)	8	

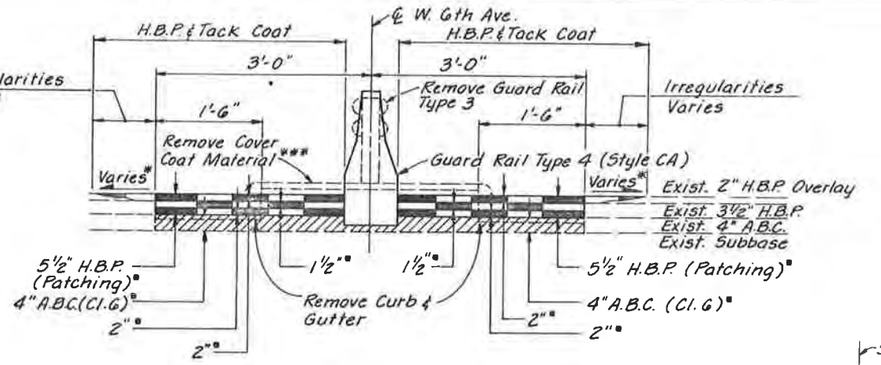

STA. 70+55 TO STA. 73+50
(W. 6TH AVE.)

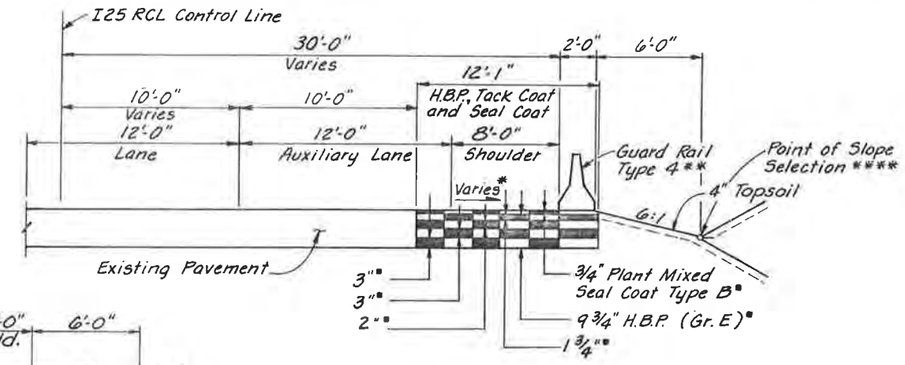

S.B. I-25 AUXILIARY LANE
STA. 300+00 TO STA. 334+40

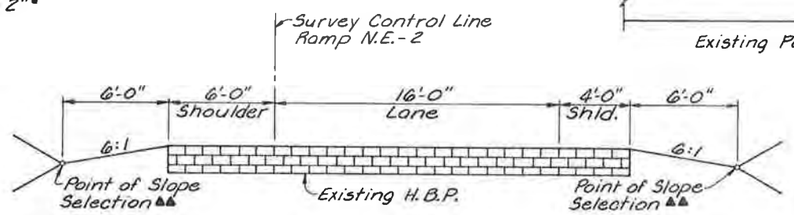

RAMP N.E.-2

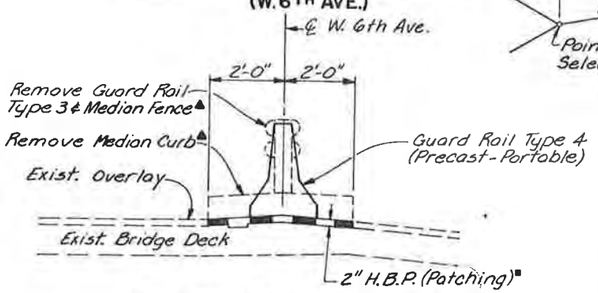

ON STRUCTURE F-16-EJ
(W. 6TH AVE.)

▲ Removal to be Paid for as Removal of Portions of Present Structure. See Bridge Rail and Barriers (F-16-DU and F-16-EJ)

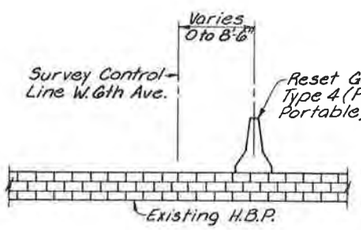

STA. 55+20 TO STA. 64+65
(W. 6TH AVE.)

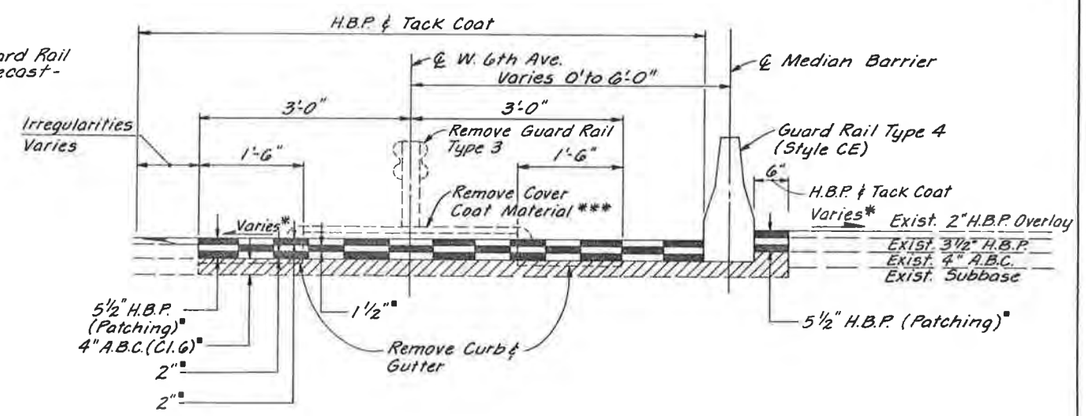

STA. 64+65 TO STA. 69+00
(W. 6TH AVE.)

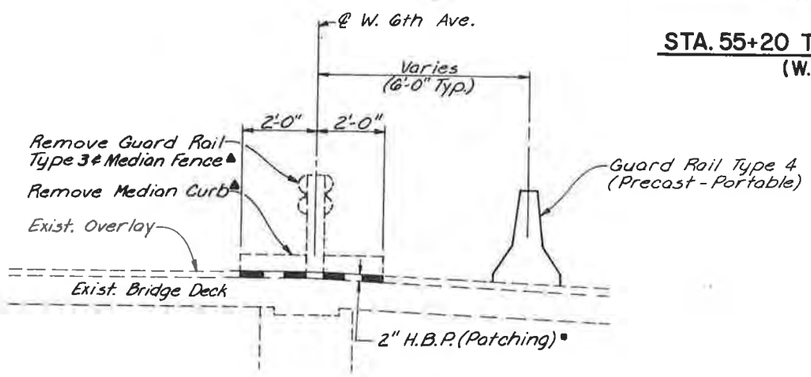

ON STRUCTURE F-16-DU
(W. 6TH AVE.)

W. 6TH AVE. MEDIAN MODIFICATIONS

▲▲ See Grading Plans for Slope Selection

• Approximate Thickness
* Cross Slope to Match Existing
** Obtained from Reset on this Project
*** To Be Paid for as "Removal of Asphalt Mat"
**** See Cross Sections for Slope Selection

AUXILIARY LANE, RAMP N.E.-2, AND W. 6TH AVE. MEDIAN MODIFICATIONS

TYPICAL SECTIONS

NOT TO SCALE

STATE OF COLORADO
STATE DEPARTMENT OF HIGHWAYS
DIVISION OF HIGHWAYS
D. O. H. FORM NO. 126
REV. FEB. 1984

SUMMARY OF APPROXIMATE QUANTITIES

AS CONSTRUCTED		
NO REVISIONS ☐	REVISED ☐	VOID ☐

FED. ROAD REGION	DIVISION	PROJ. NO.	SHEET NO.	SHEET TOTALS
VIII	COLO.	IR 25-2(208)	9	

INDEX BOOK	INDEX PAGE	INDEX SHEET	CONTRACT ITEM NO.	CONTRACT ITEM	UNIT		ROADWAY	AS CONST. ROADWAY		STR. NO. F-16-OL	AS CONST. F-16-OL		UTILITIES	AS CONST. UTILITIES			PROJECT TOTALS	TOTALS AS CONST.	DIFF. +/-	% PLAN
			202	REMOVAL OF STRUCTURES AND OBSTRUCTIONS	L S		1										1			
			202	REMOVAL OF PIPE	LIN FT		100										100			
			202	REMOVAL OF DELINEATOR	EACH		40										40			
			202	REMOVAL OF GUTTER	LIN FT		970										970			
			202	REMOVAL OF CURB AND GUTTER	LIN FT		1,550										1,550			
			202	REMOVAL OF ASPHALT MAT	SQ YD		3,745										3,745			
			202	REMOVAL OF ASPHALT MAT (PLANING)	SQ YD		6,153										6,153			
			202	REMOVAL OF PAVEMENT MARKING	SQ FT		1,512										1,512			
			202	REMOVAL OF PORTIONS OF PRESENT STRUCTURE	L S		1										1			
			202	REMOVAL OF GROUND SIGN	EACH		12										12			
			202	REMOVAL OF SIGN PANEL	EACH		5										5			
			202	REMOVAL OF GUARD RAIL TYPE 3	LIN FT		1,010										1,010			
			202	REMOVAL OF GUARD RAIL TYPE 4	LIN FT		610										610			
			202	REMOVAL OF GUARD RAIL TYPE 5	LIN FT		2,125										2,125			
			202	REMOVAL OF END ANCHORAGE	EACH		1										1			
			202	PLUG STRUCTURE	EACH		1										1			
			202	PLUG CULVERT	EACH		2										2			
			203	EMBANKMENT MATERIAL (COMPLETE IN PLACE)	CU YD		2,394										2,394			
			206	STRUCTURE EXCAVATION	CU YD		1,518			478							1,996			
			206	STRUCTURE BACKFILL (CLASS 1)	CU YD		1,074			394							1,468			
			206	STRUCTURE BACKFILL (CLASS 2)	CU YD		4			126							130			
			206	FILTER MATERIAL (CLASS B)	CU YD		51			5							56			
			207	TOPSOIL (HAUL)	CU YD		3,227										3,227			
			210	RESET GROUND SIGN	EACH		5										5			
			210	RESET TRAFFIC COUNTER (PERMANENT)	EACH		1										1			
			210	RESET FENCE	LIN FT		1,165										1,165			
			210	RESET GLARE SCREEN	LIN FT		2,980										2,980			
			210	RESET GUARD RAIL TYPE 4	LIN FT		4,162										4,162			
			212	SEEDING (LAWN)	ACRE		6.0										6			
			213	MULCHING (WOOD CHIP)	CU FT		11,625										11,625			

STATE OF COLORADO
STATE DEPARTMENT OF HIGHWAYS
DIVISION OF HIGHWAYS
O. O. H. FORM NO. 1261
REV. FEB. 1984

SUMMARY OF APPROXIMATE QUANTITIES

AS CONSTRUCTED		
NO REVISIONS ☐	REVISED ☐	VOID ☐

FED. ROAD REGION	DIVISION	PROJ. NO.	SHEET NO.	SHEET TOTALS
VIII	COLO.	IR 25-2(208)	10	

INDEX BOOK	INDEX PAGE	INDEX SHEET	CONTRACT ITEM NO.	CONTRACT ITEM	UNIT		ROADWAY	AS CONST. ROADWAY		STR. NO. F-16-OL	AS CONST. F-16-OL		UTILITIES	AS CONST. UTILITIES			PROJECT TOTALS	TOTALS AS CONST.	DIFF. +/-	% PLAN
			213	MULCHING (HYDRAULIC)	ACRE		6.0										6			
			213	SOIL RETENTION BLANKET (JUTE)	SQ YD		6,653										6,653			
			213	METAL LANDSCAPE BORDER (3/16 X 10 INCH)	LIN FT		1,830										1,830			
			213	EROSION BALES	EACH		50										50			
			214	REDOSIER DOGWOOD (CORNUS STOLONIFERA) (5 FOOT)	EACH		15										15			
			214	WASHINGTON HAWTHORN (CRATAEGUS PHAENOPYRUM) (5 FOOT)	EACH		15										15			
			214	MARSHALL SEEDLESS ASH (FRAXINUS PENNSYLVANICA MARSHALL)(2-1/2 INCH CALIPER)	EACH		19										19			
			214	JACKMAN BUSH CINQUEFOIL (POTENTILLA FRUTICOSA JACKMANI) (18 INCH)	EACH		100										100			
			214	WOODS ROSE (ROSA WOODSII) (12 INCH)	EACH		65										65			
			214	SHRUB ROSE	EACH		175										175			
			214	WAYFARINGTREE VIBURNUM (VIBURNUM LANTANA) (3 FOOT)	EACH		21										21			
			214	FLOWERING PERENNIAL	EACH		5,725										5,725			
			304	AGGREGATE BASE COURSE (CLASS 6) (HAUL)	TON		26										26			
			403	HOT BITUMINOUS PAVEMENT (PATCHING) (HAUL AND ASPHALT)	TON		75										75			
			403	HOT BITUMINOUS PAVEMENT (GRADING E) (HAUL AND ASPHALT)	TON		2,548			287							2,835			
			410	PLANT MIXED SEAL COAT (TYPE B) (HAUL AND ASPHALT)	TON		2,810			172							2,982			
			411	EMULSIFIED ASPHALT (SLOW-SETTING)	GAL		3,880										3,880			
			420	GEOTEXTILE (WEED BARRIER)	SQ YD		4,640										4,640			
			503	DRILLED CAISSON (30 INCH)	LIN FT					350							350			
			503	DRILLED CAISSON (84 INCH)	LIN FT					382							382			
			509	STRUCTURAL STEEL	LB					1,651,040							1,651,040			
			512	BEARING DEVICE (TYPE III)	EACH					24							24			
			513	BRIDGE DRAIN (SPECIAL)	EACH					4							4			
			513	DRAIN PIPE (3 INCH)	LIN FT		30										30			
			515	WATERPROOFING (MEMBRANE)	SQ YD					4174							4,174			
			518	BRIDGE COMPRESSION JOINT SEALER	LIN FT					18							18			
			518	WATERSTOP (6 INCH)	LIN FT		73			26							99			
			518	BRIDGE EXPANSION DEVICE (0-9 INCH)	LIN FT					104							104			
			601	CONCRETE CLASS B (BRIDGE)	CU YD					108							108			

STATE OF COLORADO
STATE DEPARTMENT OF HIGHWAYS
DIVISION OF HIGHWAYS
D. O. H. FORM NO. 1264
REV. FEB. 1984

SUMMARY OF APPROXIMATE QUANTITIES

AS CONSTRUCTED		
NO REVISIONS ☐	REVISED ☐	VOID ☐

FED. ROAD REGION	DIVISION	PROJ. NO.	SHEET NO.	SHEET TOTALS
VIII	COLO.	IR 25-2(208)	11	

INDEX BOOK	INDEX PAGE	INDEX SHEET	CONTRACT ITEM NO.	CONTRACT ITEM	UNIT		ROADWAY	AS CONST. ROADWAY		STR. NO. F-16-OL	AS CONST. F-16-OL		UTILITIES	AS CONST. UTILITIES			PROJECT TOTALS	TOTALS AS CONST.	DIFF. +/-	% PLAN
			601	CONCRETE CLASS B (WALL)	CU YD		352										352			
			601	CONCRETE CLASS D (BRIDGE)	CU YD					1,493							1,493			
			601	CONCRETE CLASS S (BRIDGE)	CU YD					240							240			
			602	REINFORCING STEEL	LB					2490							2,490			
			602	REINFORCING STEEL (EPOXY COATED)	LB		34,000			596,870							630,870			
			603	15 INCH REINFORCED CONCRETE END SECTION	EACH		1										1			
			604	INLET SPECIAL (5 FOOT)	EACH		2										2			
			604	INLET SPECIAL (10 FOOT)	EACH		5										5			
			604	INLET TYPE R L5 (10 FOOT)	EACH		1										1			
			604	15 INCH REINFORCED CONCRETE PIPE SEWER	LIN FT		16										16			
			606	GUARD RAIL TYPE 3 (6-3 POST SPACING)	LIN FT		150										150			
			606	GUARD RAIL TYPE 4	LIN FT		1,103										1,103			
			606	GUARD RAIL TYPE 4 SPECIAL	LIN FT		682										682			
			606	BRIDGE RAIL TYPE 4	LIN FT		695			2439							3,134			
			606	BRIDGE RAIL TYPE 4 SPECIAL	LIN FT					526							526			
			607	SILT FENCE	LIN FT		550										550			
			607	FENCE (TEMPORARY)	LIN FT		1,200										1,200			
			609	CURB AND GUTTER TYPE 2 (SECTION I-B)	LIN FT		105										105			
			609	CURB AND GUTTER TYPE 2 (SECTION II-B)	LIN FT		595										595			
			610	MEDIAN COVER MATERIAL (STONE)	TON		227										227			
			612	DELINEATOR (TYPE I)	EACH		29										29			
			612	DELINEATOR (TYPE II)	EACH		5										5			
			612	REFLECTOR (MEDIAN BARRIER)	EACH		36										36			
			613	3/4 INCH ELECTRICAL CONDUIT	LIN FT					78							78			
			613	2 INCH ELECTRICAL CONDUIT	LIN FT		3,075			1200							4,275			
			613	2 INCH ELECTRICAL CONDUIT (JACKED)	LIN FT		80										80			
			613	3 INCH ELECTRICAL CONDUIT	LIN FT		70										70			
			613	DIRECT-BURIAL CABLE	LIN FT		4,495										4,495			
			613	WIRING	L S		1										1			
			613	LUMINAIRE HIGH PRESSURE SODIUM (50,000 LUMEN)	EACH		16										16			

STATE OF COLORADO
STATE DEPARTMENT OF HIGHWAYS
DIVISION OF HIGHWAYS
D. O. H. FORM NO. 1261
REV. FEB. 1984

SUMMARY OF APPROXIMATE QUANTITIES

AS CONSTRUCTED		
NO REVISIONS ☐	REVISED ☐	VOID ☐

FED. ROAD REGION	DIVISION	PROJ. NO.	SHEET NO.	SHEET TOTALS
VIII	COLO.	IR 25-2(208)	12	

INDEX BOOK	INDEX PAGE	INDEX SHEET	CONTRACT ITEM NO.	CONTRACT ITEM	UNIT		ROADWAY	AS CONST. ROADWAY		STR. NO. F-16-OL	AS CONST. F-16-OL		UTILITIES	AS CONST. UTILITIES			PROJECT TOTALS	TOTALS AS CONST.	DIFF. +/-	% PLAN
			613	LUMINAIRE HIGH PRESSURE SODIUM (WALL TYPE) (16,000 LUMEN)	EACH		2										2			
			613	LIGHT STANDARD *METAL* (40 FOOT)	EACH		15										15			
			613	LIGHT STANDARD *METAL* (50 FOOT)	EACH		1										1			
			613	CONCRETE FOUNDATION PAD	EACH		16										16			
			613	INTERIOR LIGHTING (STEEL BOX GIRDER)	EACH					1							1			
			614	SIGN PANEL (CLASS I)	SQ FT		122										122			
			614	SIGN PANEL (CLASS II)	SQ FT		175										175			
			614	SIGN PANEL (CLASS III)	SQ FT		1,664										1,664			
			614	TIMBER SIGN POST 6 X 6 INCH	LIN FT		112										112			
			614	STEEL SIGN POST (S 3 X 5.7)	LIN FT		9										9			
			614	STEEL SIGN POST (S 3 X 7.5)	LIN FT		9										9			
			614	CONCRETE FOOTING II-S (DRILLED)	EACH		1										1			
			614	CONCRETE FOOTING III-S (DRILLED)	EACH		2										2			
			614	CONCRETE FOOTING V-S (DRILLED)	EACH		1										1			
			614	OVERPASS MOUNTED SIGN BRACKET	EACH		1										1			
			614	SIGN BRIDGE STRUCTURE (45 TO LESS THAN 50 FOOT FRAME)	EACH		1										1			
			614	SIGN BRIDGE STRUCTURE (80 TO LESS THAN 85 FOOT FRAME)	EACH		1										1			
			614	SIGN BRIDGE STRUCTURE (90 TO LESS THAN 95 FOOT FRAME)	EACH		1										1			
			614	BALANCED BUTTERFLY STRUCTURE	EACH		1										1			
			614	LOOP DETECTOR WIRE	LIN FT		1,900										1,900			
			614	IMPACT ATTENUATOR (SANDWICH SYSTEM)	EACH		2										2			
			618	PRESTRESSING STEEL BAR	M KFT					184							184			
			619	1 INCH PLASTIC PIPE	LIN FT		815										815			
			619	1 1/2 INCH PLASTIC PIPE	LIN FT		150										150			
			619	2 INCH PLASTIC PIPE	LIN FT		55										55			
			619	3 INCH PLASTIC PIPE	LIN FT		200										200			
			620	FIELD LABORATORY (CLASS 2)	EACH		1										1			
			623	SHRUBBERY SPRAY AND FLOOD IRRIGATOR	EACH		17										17			
			623	1 INCH POP-UP ROTARY SPRINKLER	EACH		6										6			
			623	2 INCH AUTOMATIC CONTROL VALVE	EACH		1										1			

STATE OF COLORADO
STATE DEPARTMENT OF HIGHWAYS
DIVISION OF HIGHWAYS
D.O.H. FORM NO. 1261
REV. FEB. 1984

SUMMARY OF APPROXIMATE QUANTITIES

AS CONSTRUCTED		
NO REVISIONS ☐	REVISED ☐	VOID ☐

FED. ROAD REGION	DIVISION	PROJ. NO.	SHEET NO.	SHEET TOTALS
VIII	COLO.	IR 25-2(208)	13	

INDEX BOOK	INDEX PAGE	INDEX SHEET	CONTRACT ITEM NO.	CONTRACT ITEM	UNIT		ROADWAY	AS CONST. ROADWAY		STR. NO. F-16-OL	AS CONST. F-16-OL		UTILITIES	AS CONST. UTILITIES			PROJECT TOTALS	TOTALS AS CONST.	DIFF. +/-	% PLAN
			623	CONTROL WIRE 24 VOLT	LIN FT		410										410			
			625	CONSTRUCTION SURVEYING	L S		1										1			
			626	MOBILIZATION	L S		.3			.7							1			
			627	THERMOPLASTIC PAVEMENT MARKING	SQ FT		11,484										11,484			
			627	PREFORMED PLASTIC PAVEMENT MARKING (60 MILS)	SQ FT		1,764										1,764			
				FORCE ACCOUNT ITEMS																
			FA01	MINOR CONTRACT REVISIONS	F A		1										1			
			FA02	ON-THE-JOB TRAINEE	EACH		4										4			
			FA03	POTHOLING FOR UTILITIES	F A								1				1			
			FA04	REPAIR, RESET AND MAINTENANCE OF EXISTING IRRIGATION SYSTEM	F A		1										1			
			FA05	OBTAIN PHONE SERVICE FROM MOUNTAIN BELL FOR PERMANENT TRAFFIC COUNTER	F A		1										1			
			FA06	REROUTE 6" WATER MAIN AROUND SIGN STRUCTURE FOOTINGS	F A								1				1			
			FA07	DBE INCENTIVE PAYMENT	F A		.3			.7							1			

STATE OF COLORADO
STATE DEPARTMENT OF HIGHWAYS
DIVISION OF HIGHWAYS
D. O. H. FORM NO. 126
REV. FEB. 1984

AS CONSTRUCTED			FED. ROAD REGION	DIVISION	PROJ. NO.	SHEET NO.	SHEET TOTALS
NO REVISIONS ☐	REVISED ☐	VOID ☐	VIII	COLO.	IR25-2(208)	14	

SUMMARY OF EARTHWORK

INDEX BOOK	INDEX PAGE	INDEX SHEET	ITEM	PROJECT TOTALS ROADWAY CU. YD.	PROJECT TOTALS ROADWAY FINAL
			Embankment Material (CJPJ)		
			Roadway (from Cross Sections)	2,393	
			From Structure Quantities	1	
			Total For Pay Quantities	2,394	
			(For Information Only) Roadway Quantities Balance Embankment Material X Factor (2,394 x 1.15)	2,753	
			Total For Balance	2,753	
			(For Information Only) Unclassified Excavation		
			Roadway (from Cross Sections)	119	
			From Structure Quantities	11	
			△ Borrow (Source Undesignated)	2,623	
			Total For Balance	2,753	

△ Minimum R Value = 20 in the top two feet of Subgrade, and 5 below the top two feet, when tested by the Hveem Stabilometer.

TABULATION OF CURBS & GUTTERS

STATION	SIDE	CURB & GUTTER TYPE 2 (SECTION II B) LIN.FT.	CURB & GUTTER TYPE 2 (SECTION I B) LIN.FT.	REMARKS
W. 6TH AVE.				
57+30 TO 57+96	LT.		105	
59+00 TO 60+35	LT.	135		
65+05 TO 68+95	RT.	460		
TOTAL		595	105	

TABULATION OF GUARD RAIL

STATION	SIDE	GUARD RAIL TYPE 4 (STYLE CE)* LIN. FT.		GUARD RAIL TYPE 4 (STYLE CA)* LIN. FT.		GUARD RAIL TYPE 4 SPECIAL LIN. FT.		GUARD RAIL TYPE 3 ▲ LIN. FT.		REMARKS
W. 6TH AVE.										
63+50 TO 64+60	RT.					110				North Side of Piers
63+50 TO 64+60	RT.					110				South Side of Piers
64+55 TO 65+10	LT.							75		w/3E End Anchorage
64+60 TO 69+10	℄	450								℄ W. 6th Ave.
70+50 TO 73+50	℄			300						℄ W. 6th Ave.
I-25										
276+80 TO 277+27	℄	47								I-25 Median (East Side)
276+80 TO 277+27	℄	47								I-25 Median (West Side)
277+35 TO 278+27	℄	92								I-25 Median (East Side)
277+35 TO 278+27	℄	92								I-25 Median (West Side)■
278+35 TO 279+10	℄	75								I-25 Median
300+00 TO 303+00	RT.					300				Rt. Side Auxiliary Lane
RAMP 'G'										
815+92 TO 817+54	LT.					162				
RAMP NE-2										
1499+25 TO 1500+00	LT.							75		w/3E End Anchorage
TOTALS		803		300		682		150		

* Guard Rail Type 4 (Style CE) and Guard Rail Type 4 (Style CA) will be paid for as Guard Rail Type 4.

■ 12' End Section at this location to be obtained from Reset on this Project.

▲ Guard Rail Type 3 shall be galvanized.

STATE OF COLORADO
STATE DEPARTMENT OF HIGHWAYS
DIVISION OF HIGHWAYS
O. O. H. FORM NO. 1261
REV. FEB. 1984

AS CONSTRUCTED		
NO REVISIONS ☐	REVISED ☐	VOID ☐

FED. ROAD REGION	DIVISION	PROJ. NO.	SHEET NO.	SHEET TOTALS
VIII	COLO.	IR 25-2(208)	15	

TABULATION OF SURFACING QUANTITIES

STATION TO STATION	HOT BITUMINOUS PAVEMENT - TON (GRADING E) (HAUL AND ASPHALT)											PLANT MIXED SEAL COAT (TYPE B)**		EMULSIFIED ASPHALT (SLOW-SETTING)		REMARKS
	BOTTOM LAYER 3"	FINAL	THIRD LAYER 3"	THIRD LAYER 2"	FINAL	SECOND LAYER 2"	FINAL	TOP LAYER 1.25"	TOP LAYER 1.75"	FINAL		TONS	FINAL	GAL.	FINAL	
RAMP 'G'																
803+18 TO 815+12								287				172				Structure F-16-OL
815+12 TO 817+54	124			83		83		52				31		113		
AUX. LANE																
301+08 TO 334+30	679		679			452			396			170		604		
I-25 OVERLAY												949		1,150		See Pavement Marking Plans
6TH AVE. OVERLAY												1,428		1,731		See Pavement Marking Plans
HBP (PATCHING) (H-ASPHALT)																75 Tons Estimated
Aggregate Base Course (Cl. 6)*																26 Tons Estimated ■
RAMP 'F'																
719+30 TO 300+00												232		282		See Pavement Marking Plans
PROJECT SUBTOTALS	803		679	83		535		339	396			2,982		3,880		
PROJECT TOTALS	2,835											2,982		3,880		

* (HAUL) ** (HAUL AND ASPHALT) *** Minimum R Value = 20 in the top two feet of subgrade, and 5 below the top two feet, when tested by the hveem Stabilometer. ■ For use in W. 6th Ave Median Modification

Stabilization is based on the following:

	18k EDLA	18k ESAL	R VALUE OF SUBGRADE	REGIONAL FACTOR	SERVICEABILITY INDEX	STRENGTH COEFFICIENTS
RAMP 'G'	66	----	20 ***	1.5	2.5	Bituminous Pavement = 0.44
AUX. LANE	----	2,830,000	10	1.5	2.5	Aggregate Base Course = 0.12

LIBRARY\IR0232\IR25.DGN1
USERNAME = STSTEWART
DATE: 24-MAR-1988 TIME 18:49

STATE OF COLORADO
STATE DEPARTMENT OF HIGHWAYS
DIVISION OF HIGHWAYS
D. O. H. FORM NO. 1261
REV. FEB. 1984

TABULATION OF REMOVE, ADJUST, & RESET ITEMS

AS CONSTRUCTED	FED. ROAD REGION	DIVISION	PROJ. NO.	SHEET NO.	SHEET TOTALS
NO REVISIONS ☐ REVISED ☐ VOID ☐	VIII	COLO.	IR25-2(208)	16	

STATION	SIDE	*REMOVAL OF STRUCTURES AND OBSTRUCTIONS		REMOVAL OF PIPE		REMOVAL OF GUTTER		REMOVAL OF CURB & GUTTER		REMOVAL OF ASPHALT MAT	REMOVAL OF ASPHALT MAT (PLANING)	*REMOVAL OF PORTIONS OF PRESENT STRUCTURE		REMOVAL OF GUARD RAIL TYPE 3		REMOVAL OF GUARD RAIL TYPE 4	RESET FENCE	REMOVAL OF GUARD RAIL TYPE 5		REMOVAL OF END ANCHORAGE	PLUG STRUCTURE	PLUG CULVERT	RESET GLARE SCREEN	RESET GUARD RAIL TYPE 4	REMARKS
		L.S.		LIN. FT.		LIN. FT.		LIN. FT.		SQ. YD.	SQ. YD.	L.S.		LIN. FT.		LIN. FT.	LIN. FT.	LIN. FT.		EACH	EACH	EACH	LIN. FT.	LIN. FT.	
W.6TH AVE.																									
55+20 TO 63+50	RT.																							830	℄ W.6th Ave.
58+45 TO 59+05	LT.							90																	Lt.side NW quad. Loop Ramp
58+65 TO 59+70	LT.							140																	Rt.side NW quad. Loop Ramp
59+00	LT.									999															NW quad. Loop Ramp
59+65	LT.	1																							Inlet
59+65	LT.																					1			15" Storm Sewer
59+65 TO 61+05	LT.					140																			
● 55+10 TO 83+00	℄																						2,980		
61+40 TO 63+45	℄											1													℄ Median on Structure F-16-DU
67+70 TO 70+45	LT.																							272	
60+32 TO 61+04	LT.																							72	
64+35 TO 65+07	RT.																							72	
64+05	℄	1																							Inlet
64+05	℄																					1			15" Storm Sewer
66+85 TO 68+85	LT.							250																	Rt.Side Detour 'B'
66+95 TO 67+65	LT.							100																	Lt.Side Detour 'B'
68+00 TO 270+00	LT.									1,843															Ramp and Detours 'B' & 'D'
68+25	RT.									194															Detour 'C'
69+00 TO 70+55	℄											1													℄ Median on Structure F-16-EJ
68+40 TO 73+50	℄							710																	℄ Median; 2 Sides
68+40 TO 73+50	℄													355											℄ Median
68+40 TO 73+50	℄									118															℄ Median
64+20 TO 66+20	LT.									611															Lt.Side Detour 'A'
66+40 TO 69+25	RT.							340																	
53+95 TO 57+50	LT./RT.										6,153														
RAMP NE-2																									
1500+00 TO 1501+12	LT.																							112	
1504+70 TO 1506+20	LT.																							130	
1506+40 TO 1507+30	RT.																							80	
DETOURS																									
1901+20	LT./RT.			100																					12" CSP
SHEET TOTAL		1		100		140		1,630		3,765	6,153	1		355		0	0	0		0	0	2	2,980	1,568	

* For Information Only

● See General Notes.

STATE OF COLORADO
STATE DEPARTMENT OF HIGHWAYS
DIVISION OF HIGHWAYS
D. O. H. FORM NO. 1261
REV. FEB. 1984

TABULATION OF REMOVE, ADJUST, & RESET ITEMS (CONTINUED)

AS CONSTRUCTED
NO REVISIONS ☐ REVISED ☐ VOID ☐

FED. ROAD REGION	DIVISION	PROJ. NO.	SHEET NO.	SHEET TOTALS
VIII	COLO.	IR25-2(208)	17	

STATION	SIDE	*REMOVAL OF STRUCTURES AND OBSTRUCTIONS		REMOVAL OF PIPE		REMOVAL OF GUTTER		REMOVAL OF CURB & GUTTER		REMOVAL OF ASPHALT MAT	REMOVAL OF ASPHALT MAT (PLANING)	*REMOVAL OF PORTIONS OF PRESENT STRUCTURE		REMOVAL OF GUARD RAIL TYPE 3		REMOVAL OF GUARD RAIL TYPE 4	RESET FENCE	REMOVAL OF GUARD RAIL TYPE 5		REMOVAL OF END ANCHORAGE	PLUG STRUCTURE	PLUG CULVERT	RESET GLARE SCREEN	RESET GUARD RAIL TYPE 4	REMARKS
		L.S.		LIN. FT.		LIN. FT.		LIN. FT.		SQ. YD.	SQ. YD.	L.S.		LIN. FT.		LIN. FT.	LIN. FT.	LIN. FT.		EACH	EACH	EACH	LIN. FT.	LIN. FT.	
I-25																									
272+50 TO 273+20	RT.							80																	Rt. Side N.W. Quad. Loop Ramp
306+00 TO 311+68	RT.																							570	
303+05 TO 314+65	RT.																1,165								
273+05	RT.																				1				Inlet
280+00	RT.																							64	See Impact Attenuator
300+00 TO 306+10	RT.															610									Rt. Side I-25 S.B.
306+10 TO 327+35	RT.																	2125							Rt. Side I-25 S.B.
318+90 TO 327+20	RT.					830																			Rt. Side I-25 S.B.
319+10	RT.	1																							Inlet
322+90	RT.	1																							Inlet
327+30	RT.	1																							Inlet
327+35 TO 334+40	RT.													705											
334+40	RT.																			1					
314+67 TO 327+50	RT.																							1,280	
327+50 TO 334+30	RT.																							680	
SHEET TOTAL		1		0		830		80		0	0	0		705		610	1,165	2,125		1	1	0	0	2,594	
TOTALS		1		100		970		1,710		3,765	6,153	1		1,060		610	1,165	2,125		1	1	2	2,980	4,162	

* For Information Only

STATE OF COLORADO
STATE DEPARTMENT OF HIGHWAYS
DIVISION OF HIGHWAYS
D.O.H. FORM NO. 1261
REV. FEB. 1984

TABULATION OF STORM SEWER SYSTEM

AS CONSTRUCTED		
NO REVISIONS ☐	REVISED ☐	VOID ☐

FED. ROAD REGION	DIVISION	PROJ. NO.	SHEET NO.	SHEET TOTALS
VIII	COLO.	IR25-2(208)	18	

INDEX BOOK	INDEX PAGE	INDEX SHEET	NOTE NO.	LOCATION	INLET - EACH TYPE R L (PAY) 5	INLET - EACH TYPE R H (PAY) 10	INLET - EACH TYPE	INLET - EACH TYPE SPECIAL	INLET - EACH TYPE SPECIAL H (PAY) 5	INLET - EACH TYPE SPECIAL H (PAY) 10	MANHOLE - EACH SLAB BASE	MANHOLE - EACH BOX BASE	MANHOLE - EACH SPECIAL	MANHOLE - EACH H (PAY)	H (MEASURED) ▲	PIPE SEWER LINE FROM LOWER	PIPE SEWER LINE TO UPPER	PIPE SEWER REINFORCED CONCRETE LINEAR FEET 15"	"H" PIPE COVER FEET	STRUCTURE EXCAVATION CUBIC YARD	STRUCTURE BACKFILL (CLASS 1) CUBIC YARD	STRUCTURE BACKFILL (CLASS 2) CUBIC YARD	UNCLASSIFIED EXCAVATION EMB. CUBIC YARD	MISCELLANEOUS
			58 **	57+65.00 0.75' LT.					1						3'-3"					0	0	0	0	** Connect to existing 15" culvert. ●
			60 **	59+65.00 71.00' LT.	1										9'-3"					0	0	0	0	** Connect to existing 15" culvert. ●
			64 **	64+05.00 0.25' RT.						1					7'-0"					0	0	0	0	** Connect to existing 15" culvert. ●
			817	817+45.00 4.00' LT.					1						3'-5"	* 5234.50	817 5237.00	16	2	11	3	4	1	* Outlet of R.C.P. End Section. One 15" concrete end section required at this location.
			315 **	314+70.00 34.70' RT.						1					7'-6"					0	0	0	0	** Connect to existing 15" culvert. ●
			319 **	319+10.00 39.00' RT.						1					5'-6"					0	0	0	0	** Connect to existing 15" culvert. ●
			323 **	322+90.00 39.50' RT.						1					8'-0"					0	0	0	0	** Connect to existing 24" culvert. ●
			327 **	327+32.00 37.00' RT.						1					9'-0"					0	0	0	0	** Connect to existing 18" culvert. ●
				TOTAL	1				2	5								16		11	3	4	1	

▲ Elevation approximate only, actual elevation to be determined during construction.

● Cost of connecting proposed structures to existing structures to be included in the work.

UD:d108.32288TABS.DGN;1
UDA:KPLOTS3TAB4.PRF
DATE 24-MAR-1988 - TIME 11:28

STATE OF COLORADO
STATE DEPARTMENT OF HIGHWAYS
DIVISION OF HIGHWAYS
D. V. M. FORM E.126
REV. FEB. 1984

AS CONSTRUCTED		
NO REVISIONS	REVISED	VOID

FED.ROAD REGION	DIVISION	PROJ. NO.	SHEET NO.	SHEET TOTALS
VIII	COLO.	IR 25-2(208)	19	

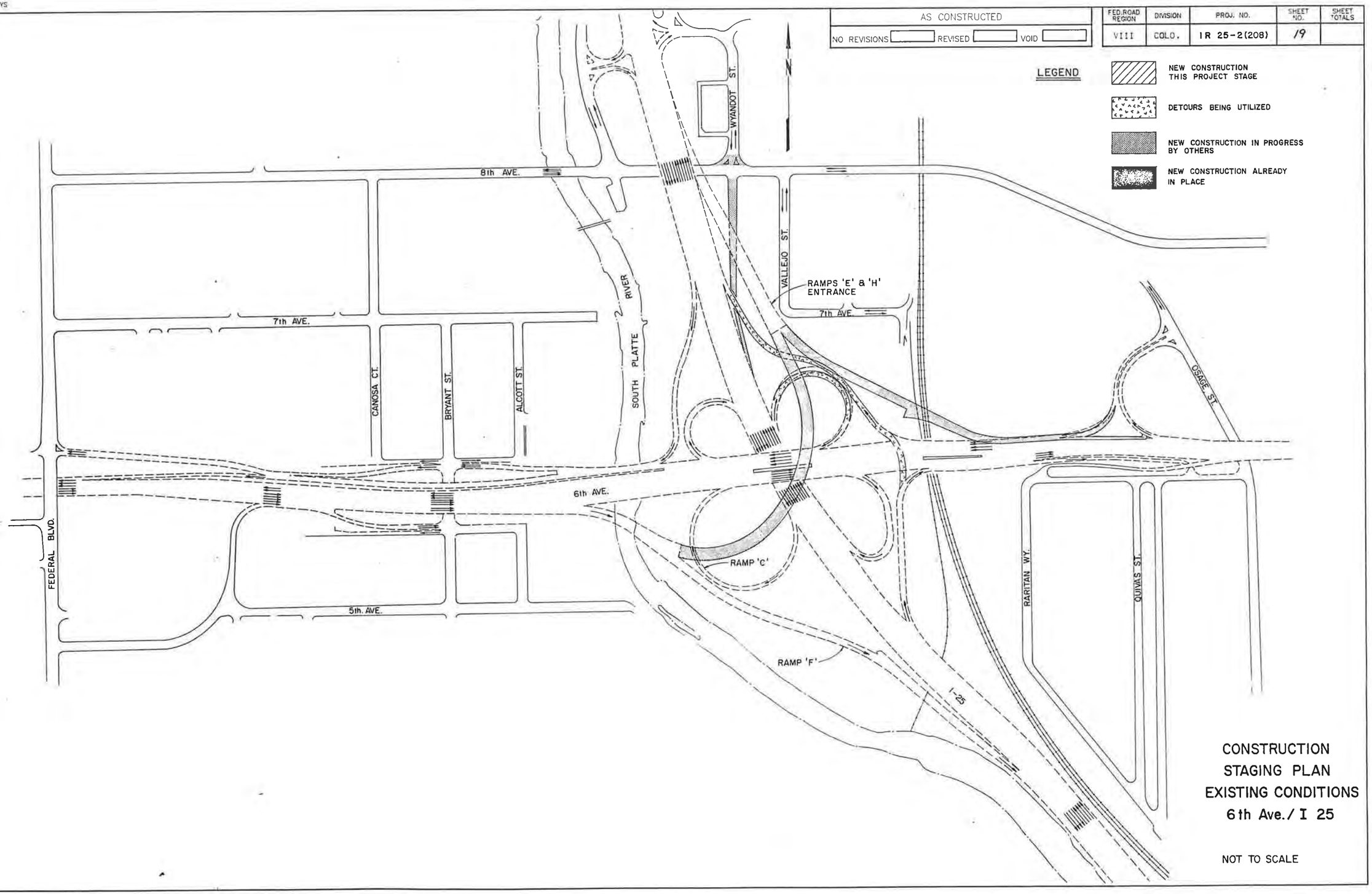

CONSTRUCTION
STAGING PLAN
EXISTING CONDITIONS
6th Ave. / I 25

NOT TO SCALE

LOPACO
THENT OF HIGHWAYS
HIGHWAYS:
RM NO. 126:
1984

AS CONSTRUCTED		
NO REVISIONS	REVISED	VOID

FED. ROAD REGION	DIVISION	PROJ. NO.	SHEET NO.	SHEET TOTALS
VIII	COLO.	IR 25-2(208)	20	

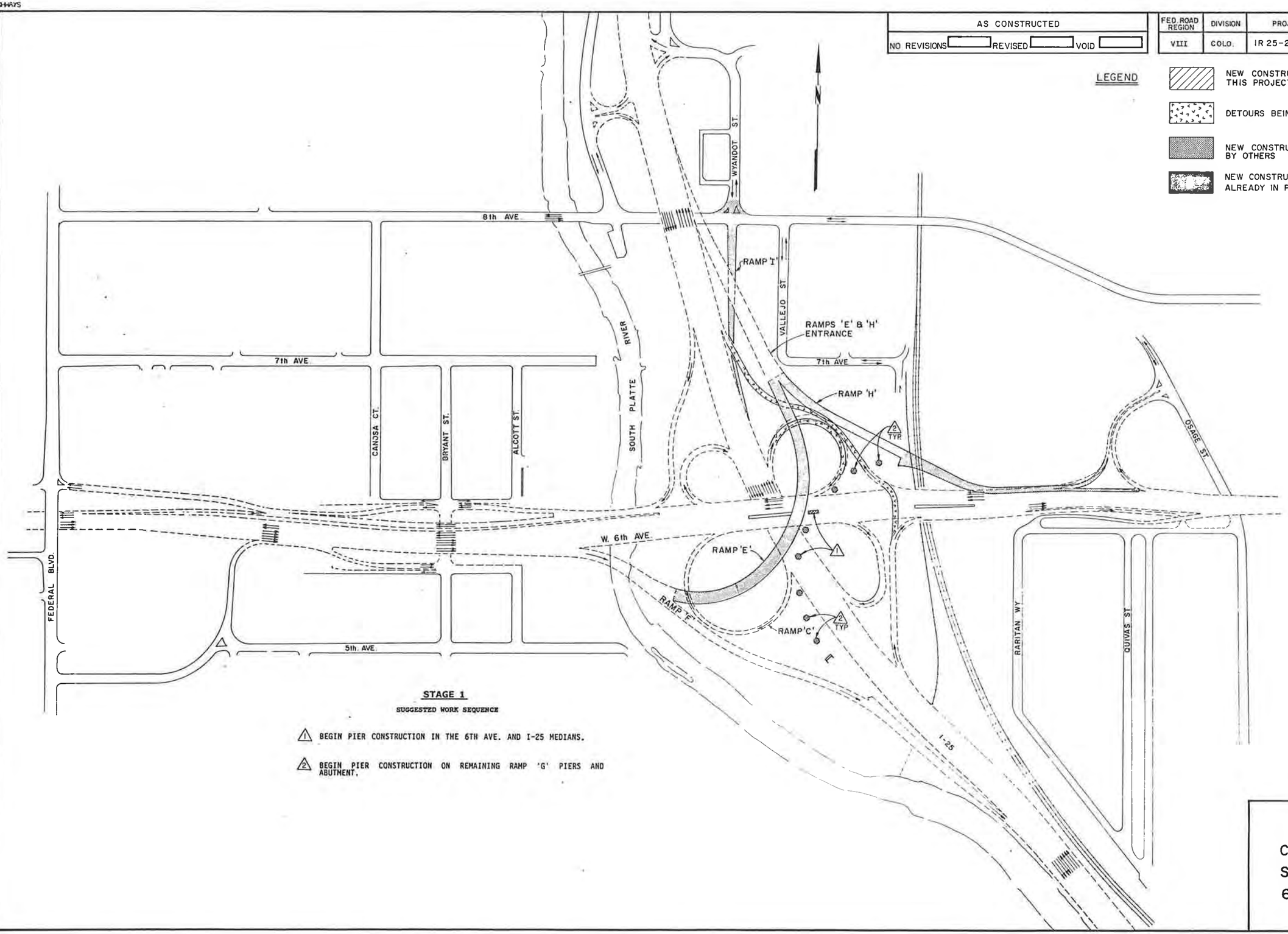

STAGE 1

SUGGESTED WORK SEQUENCE

1. BEGIN PIER CONSTRUCTION IN THE 6TH AVE. AND I-25 MEDIANS.
2. BEGIN PIER CONSTRUCTION ON REMAINING RAMP 'G' PIERS AND ABUTMENT.

STAGE I
CONSTRUCTION
STAGING PLAN
6th Ave. / I 25

NOT TO SCALE

DRADO
MENT OF HIGHWAYS
HIGHWAYS:
M NO. 126:
.984

AS CONSTRUCTED		
NO REVISIONS	REVISED	VOID

FED. ROAD REGION	DIVISION	PROJ. NO.	SHEET NO.	SHEET TOTALS
VIII	COLO.	IR 25-2(208)	21	

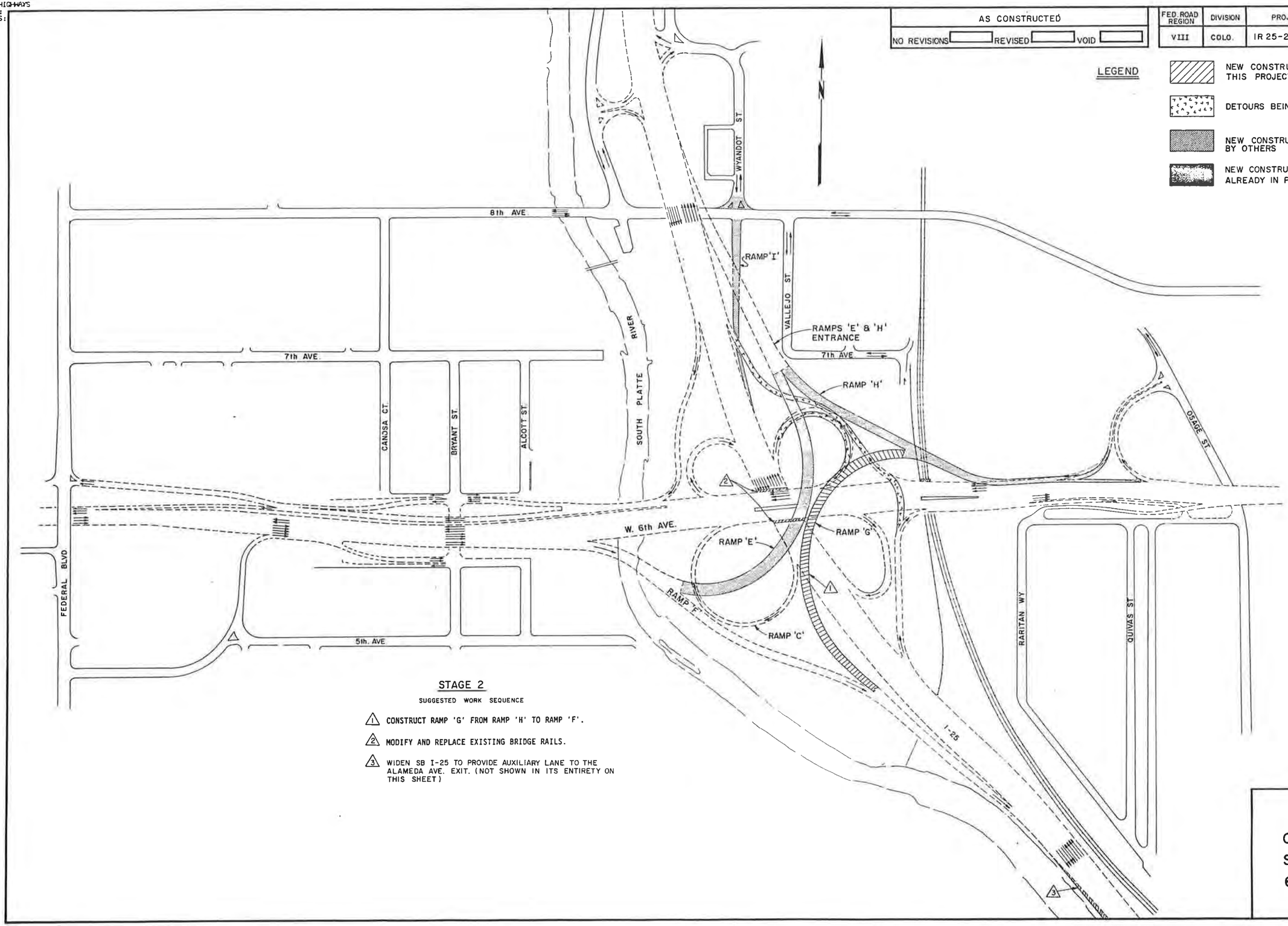

STAGE 2

SUGGESTED WORK SEQUENCE

1. CONSTRUCT RAMP 'G' FROM RAMP 'H' TO RAMP 'F'.
2. MODIFY AND REPLACE EXISTING BRIDGE RAILS.
3. WIDEN SB I-25 TO PROVIDE AUXILIARY LANE TO THE ALAMEDA AVE. EXIT. (NOT SHOWN IN ITS ENTIRETY ON THIS SHEET)

STAGE 2 CONSTRUCTION STAGING PLAN 6th Ave. / I 25

NOT TO SCALE

ORADO
MENT OF HIGHWAYS
HIGHWAYS:
M NO. 126:
984

AS CONSTRUCTED		
NO REVISIONS	REVISED	VOID

FED. ROAD REGION	DIVISION	PROJ. NO.	SHEET NO.	SHEET TOTALS
VIII	COLO.	IR 25-2(208)	22	

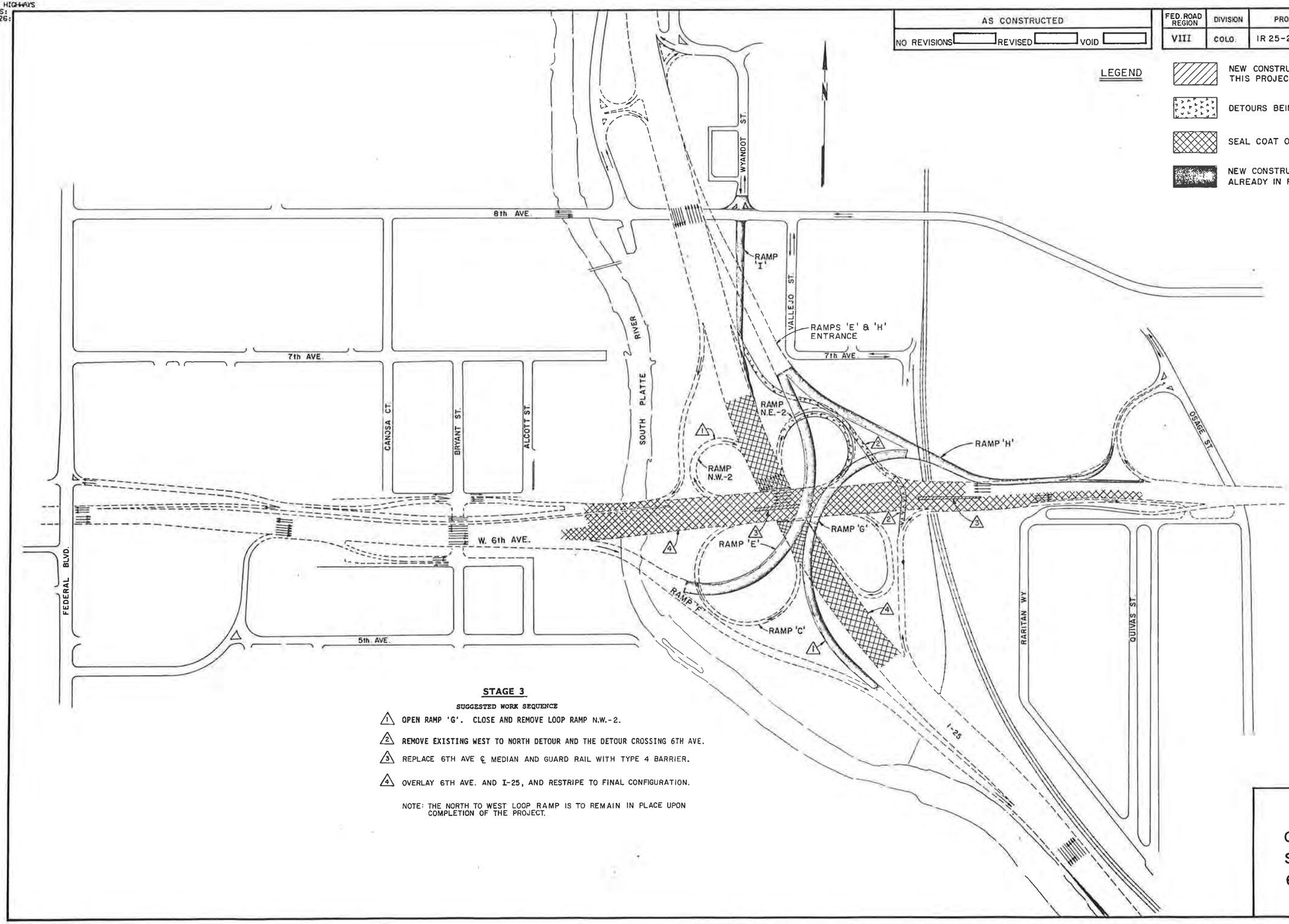

STAGE 3

SUGGESTED WORK SEQUENCE

1. OPEN RAMP 'G'. CLOSE AND REMOVE LOOP RAMP N.W.-2.
2. REMOVE EXISTING WEST TO NORTH DETOUR AND THE DETOUR CROSSING 6TH AVE.
3. REPLACE 6TH AVE ℄ MEDIAN AND GUARD RAIL WITH TYPE 4 BARRIER.
4. OVERLAY 6TH AVE. AND I-25, AND RESTRIPE TO FINAL CONFIGURATION.

NOTE: THE NORTH TO WEST LOOP RAMP IS TO REMAIN IN PLACE UPON COMPLETION OF THE PROJECT.

STAGE 3 CONSTRUCTION STAGING PLAN 6th Ave. / I 25

NOT TO SCALE

STATE OF COLORADO
STATE DEPARTMENT OF HIGHWAYS
DIVISION OF HIGHWAYS
D. O. H. FORM NO. 1261
REV. FEB. 1984

AS CONSTRUCTED	FED.ROAD REGION	DIVISION	PROJ. NO.	SHEET NO.	SHEET TOTALS
NO REVISIONS ____ REVISED ____ VOID ____	VIII	COLO.	IR 25-2(208)	23	

	RAMP 'A'	RAMP 'B'		RAMP 'C'		RAMP 'E'		
	Curve A-1	Curve B-1	Curve B-2	Curve C-1	Curve C-2	Curve E-1	Curve E-2	Curve E-3
PC	690230.075N 2136768.653E	689930.831N 2137064.552E	690271.506N 2137267.853E	689534.725N 2137124.285E	689254.787N 2136763.813E	689399.343N 2136541.036E	689449.797N 2137016.046E	690935.625N 2136770.161E
PI	689782.200N 2136874.721E	690250.418N 2136916.103E	690792.991N 2145965.927E	687961.515N 2138057.084E	689601.115N 2136417.485E	689247.780N 2136797.319E	689751.445N 2137342.646E	691144.560N 2136669.153E
PT	689739.611N 2136416.432E	690271.506N 2137267.853E	689813.377N 2137307.475E	689254.787N 2136763.813E	689646.435N 2136905.165E	689449.797N 2137016.046E	690151.713N 2137149.139E	691366.543N 2136601.479E
Δ	39° 00'52"RT.	111°29'03"RT	176°58'34"RT	165° 39'54"RT.	129° 41'27"RT.	73° 19'31"LT.	73° 04'32"LT.	8° 50'48" RT.
D	14° 19'26"	23°52'24"	24°54'40"	24° 54'40"	24° 54'40"	14° 19'26"	9° 32'58"	1° 54'36"
R	400.00'	240.00'	230.00'	230.00'	230.00'	400.00'	600.00'	3000.00'
L	684.27'	466.98'	710.43'	665.02'	520.61'	511.91'	765.25'	463.22'
T	460.26'	352.38'	8713.69'	1828.96'	489.73'	297.75'	444.59'	232.07'
e	0.080 %	0.080%	0.060 %	0.080 %	0.080 %	0.075 %	0.066 %	0.038 %
MDS/SSD	35 MPH/220'	30 MPH/206'	30 MPH/200'	30 MPH/206'	30 MPH/206'	35 MPH/227'	35 MPH/277'	50 MPH/577'

	RAMP 'F'				RAMP 'G'		RAMP 'H'	
	Curve F-1	Curve F-2	Curve F-3	Curve F-4	Curve G-1	Curve G-2	Curve H-1	Curve H-2
PC	689531.724N 2136128.524E	689195.348N 2136746.801E	688951.813N 2137311.367E	688358.905N 2138124.547E	689929.126N 2137796.568E	689784.226N 2137310.965E	689839.888 N 2138207.083 E	690182.064N 2137345.458E
PI	689530.069N 2136295.625E	689089.984N 2136888.823E	688889.809N 2137500.984E	688246.125N 2138257.010E	690055.444N 2137494.456E	689339.361N 2137009.994E	689826.511 N 2138058.444E	690285.221N 2137138.599E
PT	689430.502N 2136429.833E	689035.022N 2137056.903E	688760.481N 2137652.884E	688112.710N 2138368.662E	689784.226N 2137310.965E	688991.169N 2137418.956E	689893.112 N 2137924.889E	690491.278N 2138033.848E
Δ	36° 00'14"RT.	18° 27'49"LT.	22° 18'13"RT.	9° 39'49"RT.	78° 36'38"LT.	83° 40'08"LT.	31°38'50"RT.	36° 32'54"RT.
D	11° 08'30"	5° 15'58"	5° 39'42"	2° 47'02"	14° 19'26"	9° 32'58"	10°52'51"	8° 11'06"
R	514.25'	1088.00'	1012.00'	2058.09'	400.00'	600.00'	526.58'	700.00'
L	323.15'	350.61'	393.94'	347.12'	548.81'	876.18'	290.85'	446.52'
T	167.11'	176.84'	199.50'	173.97'	327.46'	537.11'	149.24'	231.15'
e	0.071 %	0.060 %	0.060 %	0.042 %	0.075 %	0.066 %	0.045%	0.060 %
MDS/SSD	35 MPH/245'	40 MPH/361'	40 MPH/348'	50 MPH/492'	35 MPH/236'	35 MPH/288'	35 MPH/258'	35 MPH/296'

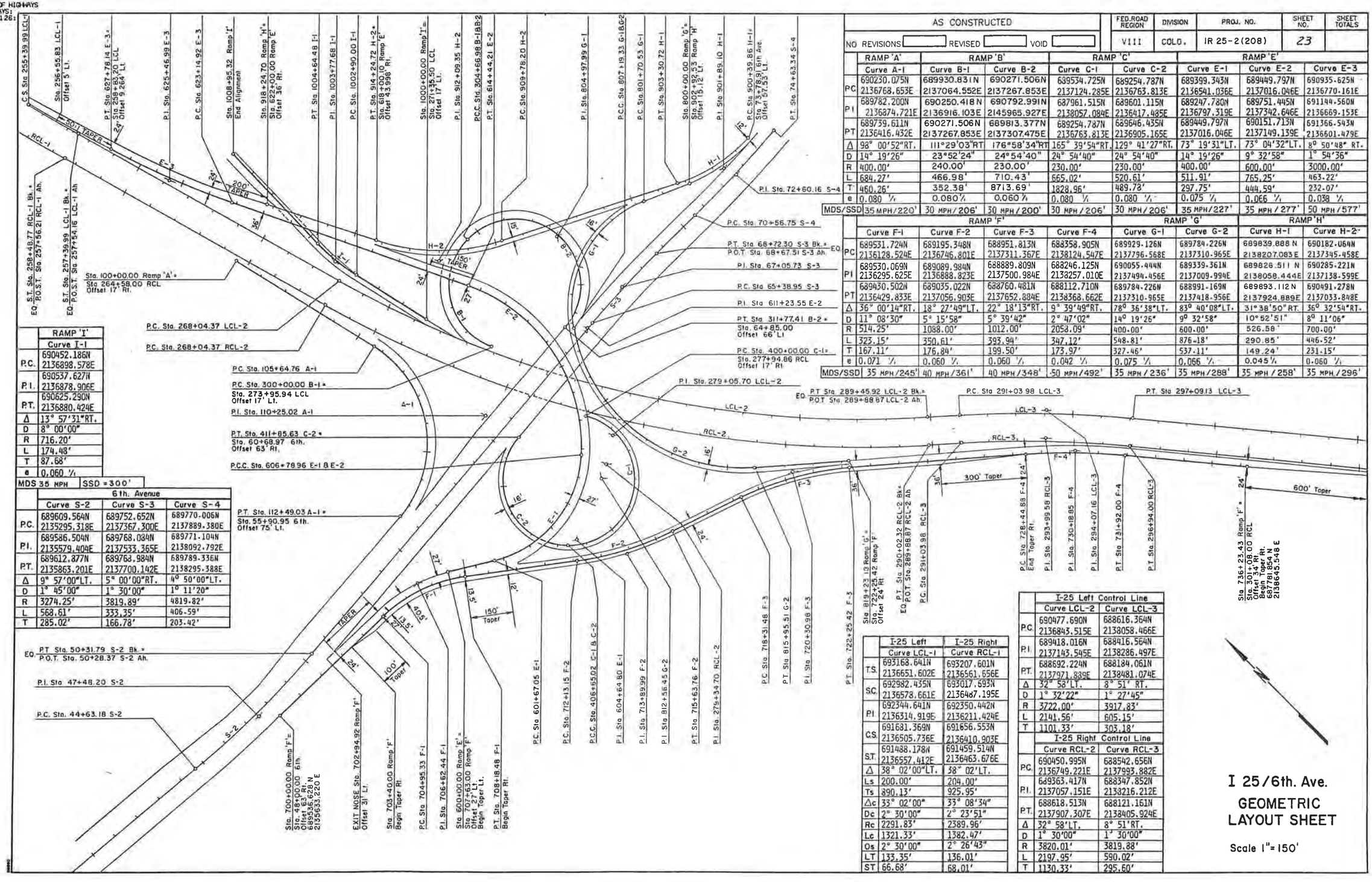

	RAMP 'I'
	Curve I-1
P.C.	690452.186N 2136898.578E
P.I.	690537.627N 2136878.906E
P.T.	690625.290N 2136880.424E
Δ	13° 57'31"RT.
D	8° 00'00"
R	716.20'
L	174.48'
T	87.68'
e	0.060 %
MDS 35 MPH	SSD = 300'

	6th. Avenue		
	Curve S-2	Curve S-3	Curve S-4
P.C.	689609.564N 2135295.318E	689752.652N 2137367.300E	689770.006N 2137889.380E
P.I.	689586.504N 2135579.404E	689768.034N 2137533.365E	689771.104N 2138092.792E
P.T.	689612.877N 2135863.201E	689763.984N 2137700.142E	689789.336N 2138295.388E
Δ	9° 57'00"LT.	5° 00'00"RT.	4° 50'00"LT.
D	1° 45'00"	1° 30'00"	1° 11'20"
R	3274.25'	3819.89'	4819.82'
L	568.61'	333.35'	406.59'
T	285.02'	166.78'	203.42'

	I-25 Left	I-25 Right
	Curve LCL-1	Curve RCL-1
T.S.	693168.641N 2136651.602E	693207.601N 2136561.656E
S.C.	692982.435N 2136578.661E	693017.693N 2136487.195E
P.I.	692344.641N 2136314.919E	692350.442N 2136211.424E
C.S.	691681.369N 2136505.736E	691656.553N 2136410.903E
S.T.	691488.178N 2136557.412E	691459.514N 2136463.676E
Δ	38° 02'00"LT.	38° 02'LT.
Ls	200.00'	204.00'
Ts	890.13'	925.95'
Δc	33° 02'00"	33° 08'34"
Dc	2° 30'00"	2° 23'51"
Rc	2291.83'	2389.96'
Lc	1321.33'	1382.47'
Os	2° 30'00"	2° 26'43"
LT	133.35'	136.01'
ST	66.68'	68.01'

	I-25 Left Control Line	
	Curve LCL-2	Curve LCL-3
P.C.	690477.690N 2136843.515E	688616.364N 2138058.466E
P.I.	689418.016N 2137143.545E	688416.564N 2138286.497E
P.T.	688692.224N 2137971.889E	688184.061N 2138481.074E
Δ	32° 58'LT.	8° 51' RT.
D	1° 32'22"	1° 27'45"
R	3722.00'	3917.83'
L	2141.56'	605.15'
T	1101.33'	303.18'
	I-25 Right Control Line	
	Curve RCL-2	Curve RCL-3
P.C.	690450.995N 2136749.221E	688542.656N 2137993.882E
P.I.	689363.417N 2137057.151E	688347.852N 2138216.212E
P.T.	688618.513N 2137907.307E	688121.161N 2138405.924E
Δ	32° 58'LT.	8° 51'RT.
D	1° 30'00"	1° 30'00"
R	3820.01'	3819.88'
L	2197.95'	590.02'
T	1130.33'	295.60'

I 25/6th. Ave.

GEOMETRIC LAYOUT SHEET

Scale 1"=150'

COLORADO
PARTMENT OF HIGHWAYS
OF HIGHWAYS:
FORM NO. 126:
. 1984

AS CONSTRUCTED							
NO REVISIONS		REVISED		VOID			
FED. ROAD REGION	DIVISION	PROJ. NO.	SHEET NO.	SHEET TOTALS			
VIII	COLO.	IR25-2(208)	24				

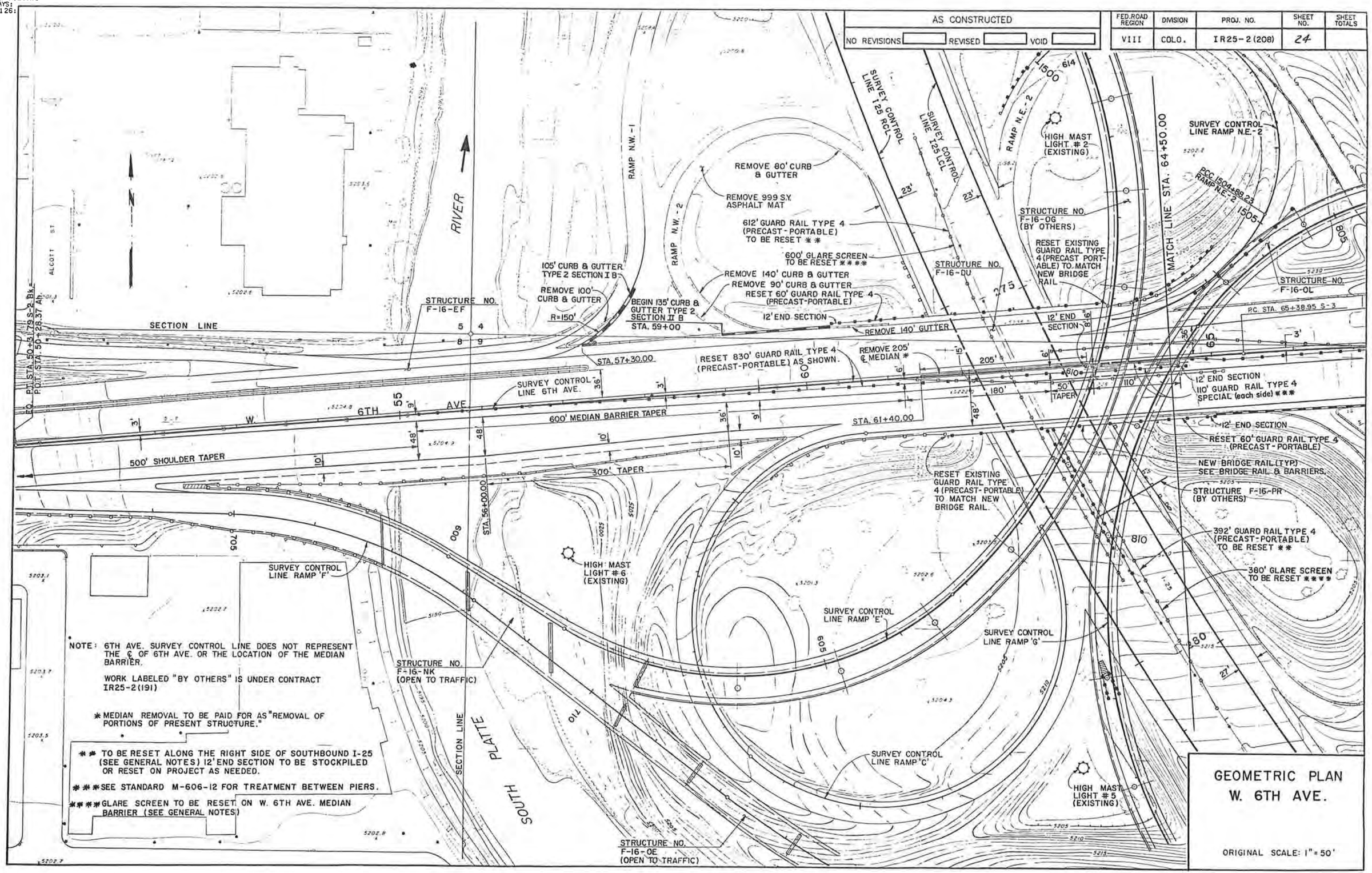

GEOMETRIC PLAN
W. 6TH AVE.

ORIGINAL SCALE: 1" = 50'

2000
DEPT OF HIGHWAYS
HIGHWAYS:
NO.126:
184

AS CONSTRUCTED		
NO REVISIONS	REVISED	VOID

FED.ROAD REGION	DIVISION	PROJ. NO.	SHEET NO.	SHEET TOTALS
VIII	COLO.	IR25-2(208)	25	

NOTE: 6TH AVE. SURVEY CONTROL LINE DOES NOT REPRESENT THE ℄ OF 6TH AVE. OR THE LOCATION OF THE MEDIAN BARRIER.

WORK LABELED "BY OTHERS" IS UNDER CONTRACT IR 25-2(191)

* MEDIAN REMOVAL TO BE PAID FOR AS REMOVAL OF ASPHALT MAT AND REMOVAL OF CURB AND GUTTER; ON STRUCTURES PAYMENT WILL BE MADE FOR "REMOVAL OF PORTIONS OF PRESENT STRUCTURE." COST FOR REMOVAL OF MEDIAN FENCE TO BE INCLUDED IN REMOVAL OF GUARD RAIL TYPE 3.

**SEE TABULATION OF RESET ITEMS FOR LOCATION OF RESET. 12' END SECTION TO BE STOCKPILED OR RESET ON PROJECT AS NEEDED.

*** GUARD RAIL TO BE PLACED ADJACENT TO EXISTING CURB ON STRUCTURE F-16-EJ.

****GLARE SCREEN TO BE RESET ON W. 6TH AVE. MEDIAN BARRIER. (SEE GENERAL NOTES)

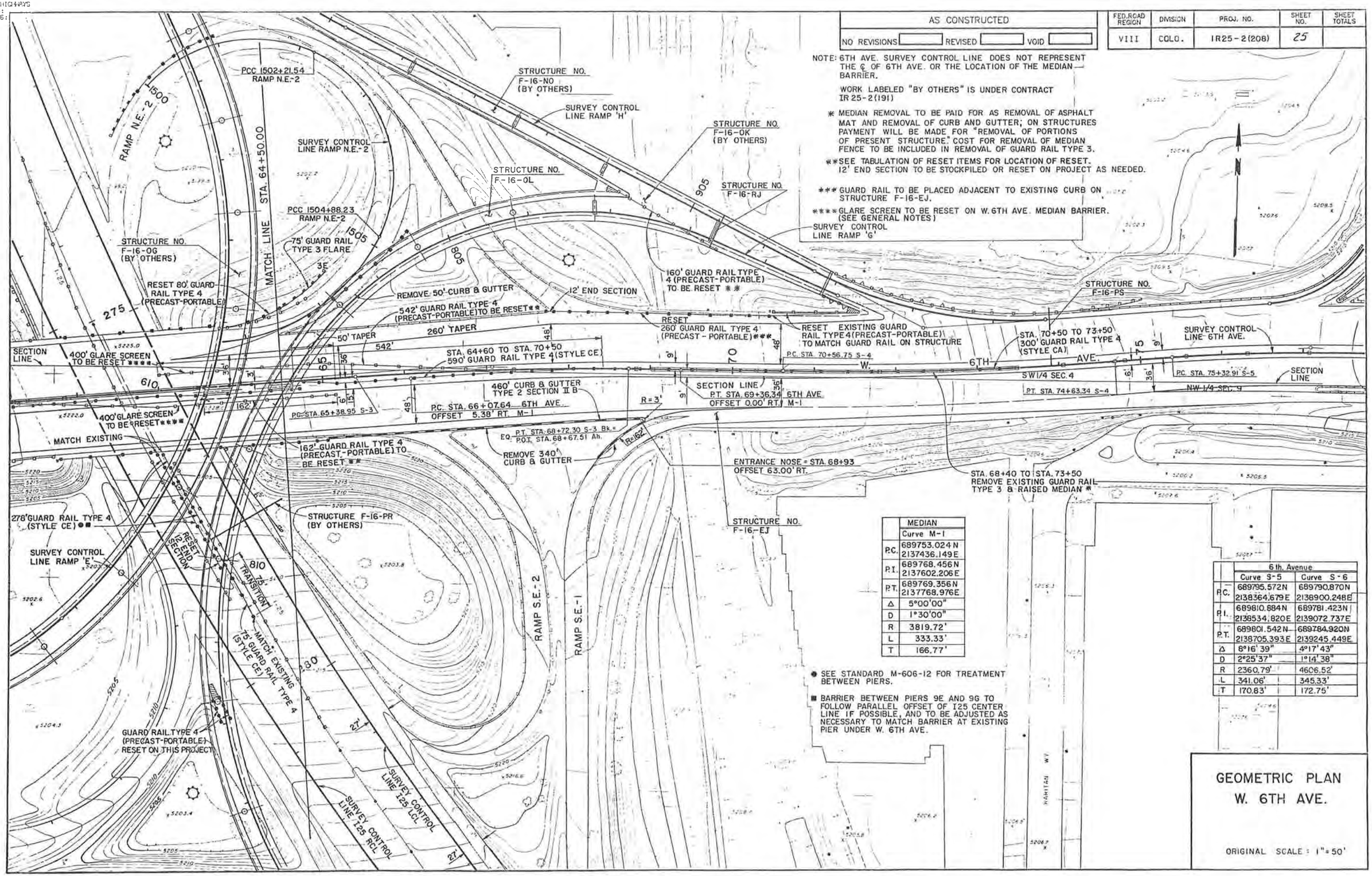

	MEDIAN
	Curve M-1
P.C.	689753.024 N 2137436.149 E
P.I.	689768.456 N 2137602.206 E
P.T.	689769.356 N 2137768.976 E
Δ	5°00'00"
D	1°30'00"
R	3819.72'
L	333.33'
T	166.77'

● SEE STANDARD M-606-12 FOR TREATMENT BETWEEN PIERS.

■ BARRIER BETWEEN PIERS 9E AND 9G TO FOLLOW PARALLEL OFFSET OF I25 CENTER LINE IF POSSIBLE, AND TO BE ADJUSTED AS NECESSARY TO MATCH BARRIER AT EXISTING PIER UNDER W. 6TH AVE.

	6th. Avenue	
	Curve S-5	Curve S-6
P.C.	689795.572N 2138364.679E	689790.870N 2138900.248E
P.I.	689810.884N 2138534.820E	689781.423N 2139072.737E
P.T.	689801.542N 2138705.393E	689784.920N 2139245.449E
Δ	8°16'39"	4°17'43"
D	2°25'37"	1°14'38"
R	2360.79'	4606.52'
L	341.06'	345.33'
T	170.83'	172.75'

GEOMETRIC PLAN
W. 6TH AVE.

ORIGINAL SCALE : 1" = 50'

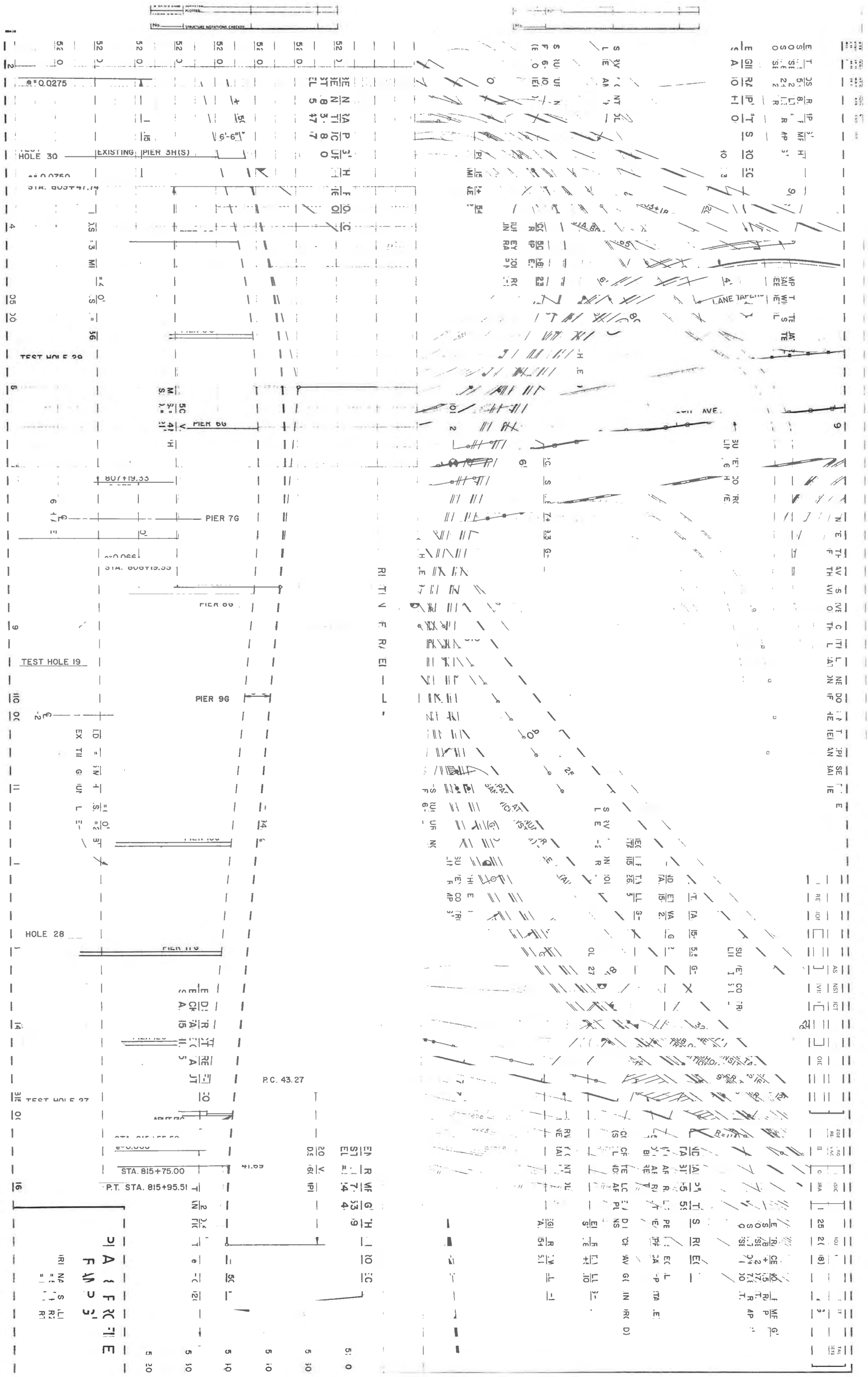
HOLE 30
EXISTING PIER 3H(S)
TEST HOLE 29
PIER 6G
PIER 7G
TEST HOLE 19
PIER 9G
HOLE 28
P.C. 43.27
STA. 815+75.00
P.T. STA. 815+95.51
LANE TAPER

AS CONSTRUCTED		
NO REVISIONS	REVISED	VOID

FEDERAL ROAD REGION NO.	DIVISION	PROJ. NO	SHEET NO.	TOTAL SHEETS
VIII	COLORADO	I R 25-2 (208)	27	

** AREAS SHOWN SHADED REPRESENT REMOVAL OF ASPHALT MAT DETOUR A TO REMAIN IN PLACE UPON COMPLETION OF PROJECT. (1,843 S.Y. OF ASPHALT MAT REMOVAL ESTIMATED)

▲ GUARD RAIL NEAR PIER 6G IS TO BE PLACED SO AS TO PROTECT RAMP TRAFFIC FROM THE PIER CAP.

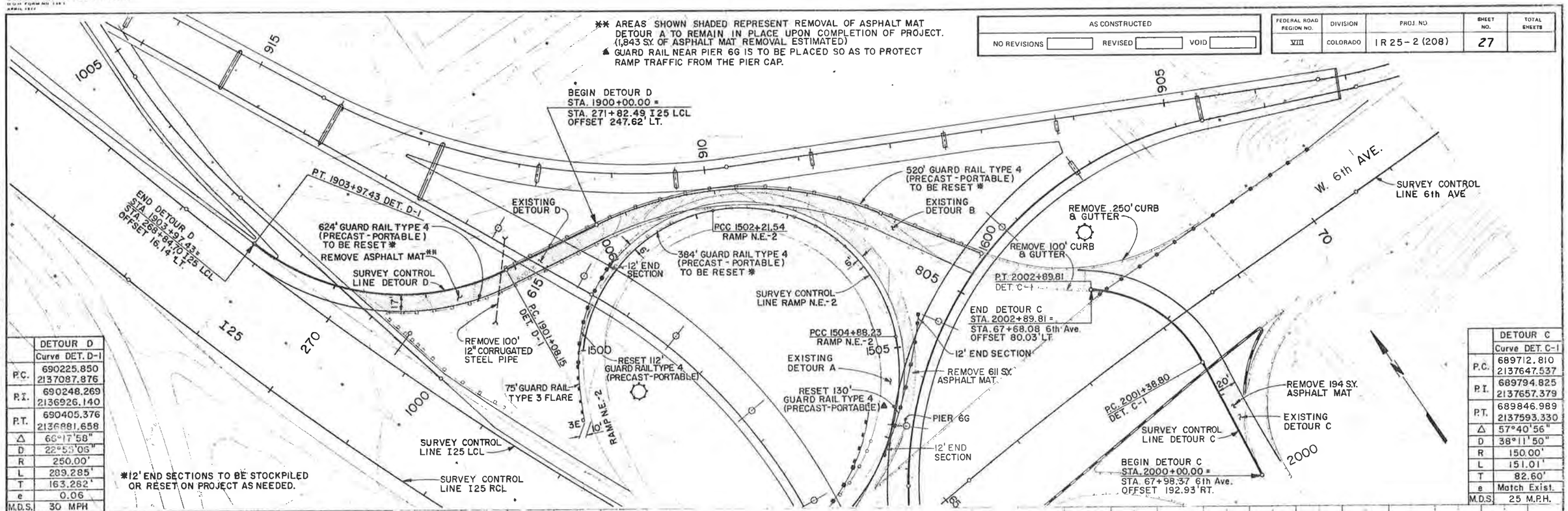

	DETOUR D
	Curve DET. D-1
P.C.	690225.850 2137087.876
P.I.	690248.269 2136926.140
P.T.	690405.376 2136881.658
Δ	66°17'58"
D	22°53'06"
R	250.00'
L	289.285'
T	163.282'
e	0.06
M.D.S.	30 MPH

	DETOUR C
	Curve DET. C-1
P.C.	689712.810 2137647.537
P.I.	689794.825 2137657.379
P.T.	689846.989 2137593.330
Δ	57°40'56"
D	38°11'50"
R	150.00'
L	151.01'
T	82.60'
e	Match Exist.
M.D.S.	25 M.P.H.

NOTE: DETOUR-PROFILES AND SURVEY CONTROL LINES ARE FOR INFORMATION ONLY.

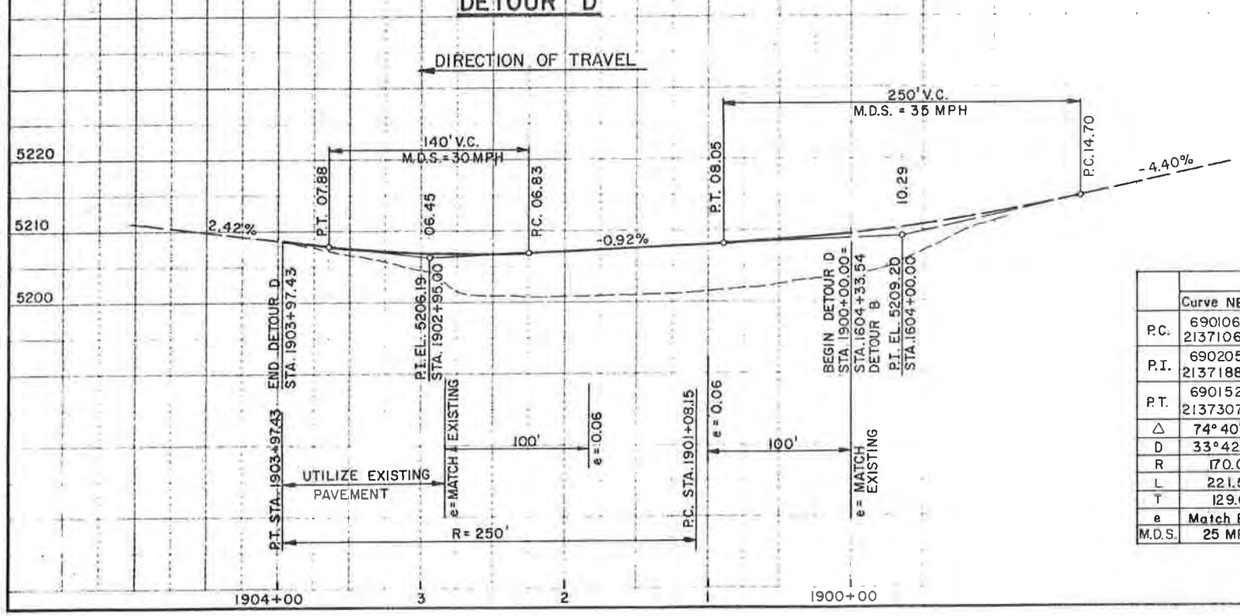

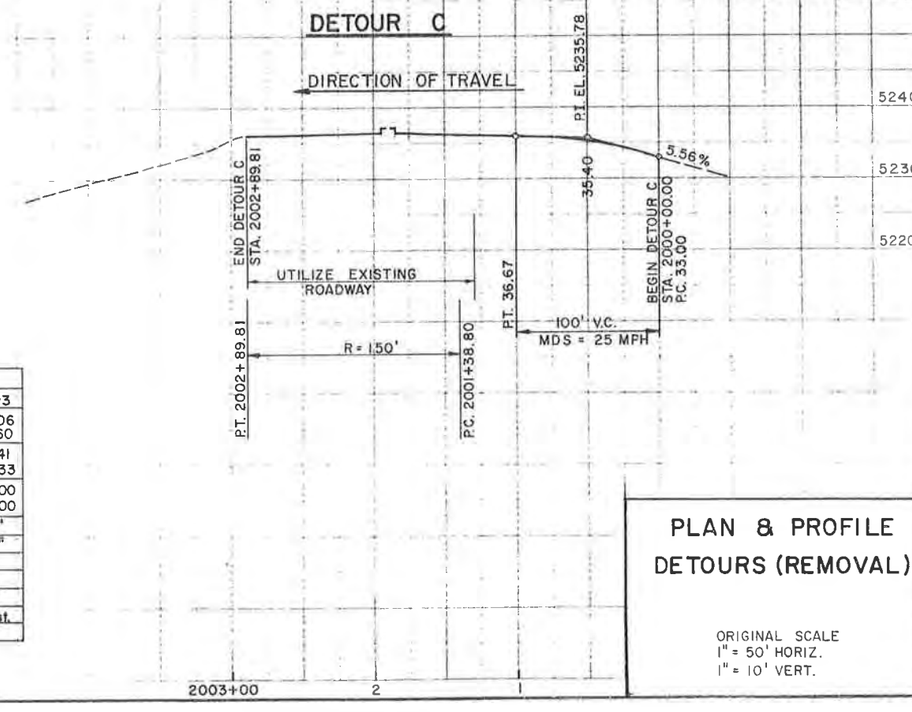

	RAMP N.E.-2		
	Curve NE2-1	Curve NE2-2	Curve NE2-3
P.C.	690106.000 2137106.000	690152.000 2137307.000	689927.206 2137391.560
P.I.	690205.655 2137188.957	690081.797 2137461.449	689803.941 2137335.833
P.T.	690152.000 2137307.000	689927.206 2137391.560	689793.000 2137201.000
Δ	74°40'05"	89°53'02"	61°02'01"
D	33°42'12"	33°42'12"	24°57'56"
R	170.00'	170.00'	229.50'
L	221.54'	266.69'	244.47'
T	129.67'	169.66'	135.28'
e	Match Exist.	Match Exist.	Match Exist.
M.D.S.	25 MPH	25 MPH	25 MPH

PLAN & PROFILE DETOURS (REMOVAL)

ORIGINAL SCALE
1" = 50' HORIZ.
1" = 10' VERT.

STATE DEPARTMENT OF HIGHWAYS
DIVISION OF HIGHWAYS STATE OF COLORADO
D.O.H. FORM NO. 1341
APRIL 1957

AS CONSTRUCTED		
NO REVISIONS	REVISED	VOID

FEDERAL ROAD REGION NO.	DIVISION	PROJ. NO.	SHEET NO.	TOTAL SHEETS
VIII	COLORADO	IR 25-2 (208)	28	

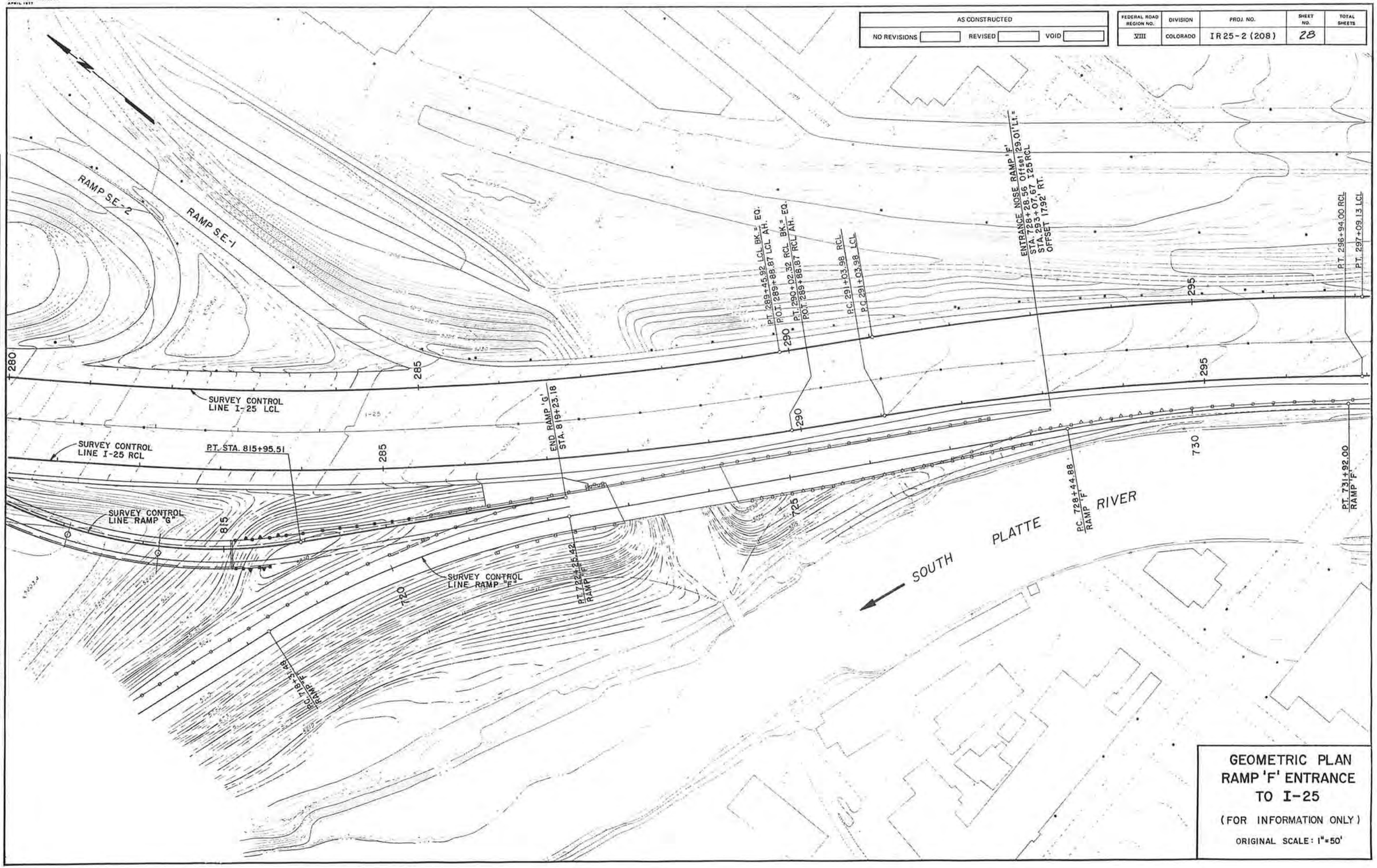

GEOMETRIC PLAN
RAMP 'F' ENTRANCE
TO I-25

(FOR INFORMATION ONLY)

ORIGINAL SCALE: 1"=50'

STATE DEPARTMENT OF HIGHWAYS
DIVISION OF HIGHWAYS STATE OF COLORADO
BOR FORM NO 1351
APRIL 1957

AS CONSTRUCTED		
NO REVISIONS	REVISED	VOID

FEDERAL ROAD REGION NO.	DIVISION	PROJ. NO.	SHEET NO.	TOTAL SHEETS
VIII	COLORADO	IR25-2(208)	29	

	I-25 LEFT	I-25 RIGHT
	Curve LCL-4	Curve RCL-4
P.C.	687403.528 N 2139134.286 E	687346.158 N 2139054.509 E
P.I.	687197.820 N 2139306.439 E	687128.685 N 2139236.507 E
P.T.	687022.872 N 2139509.777 E	686945.742 N 2139453.185 E
Δ	9° 22' 00"	9°54'00"
D	1° 45' 00"	1°45'00"
R	3274.33'	3274.24'
L	535.29'	565.75'
T	268.24'	283.58'

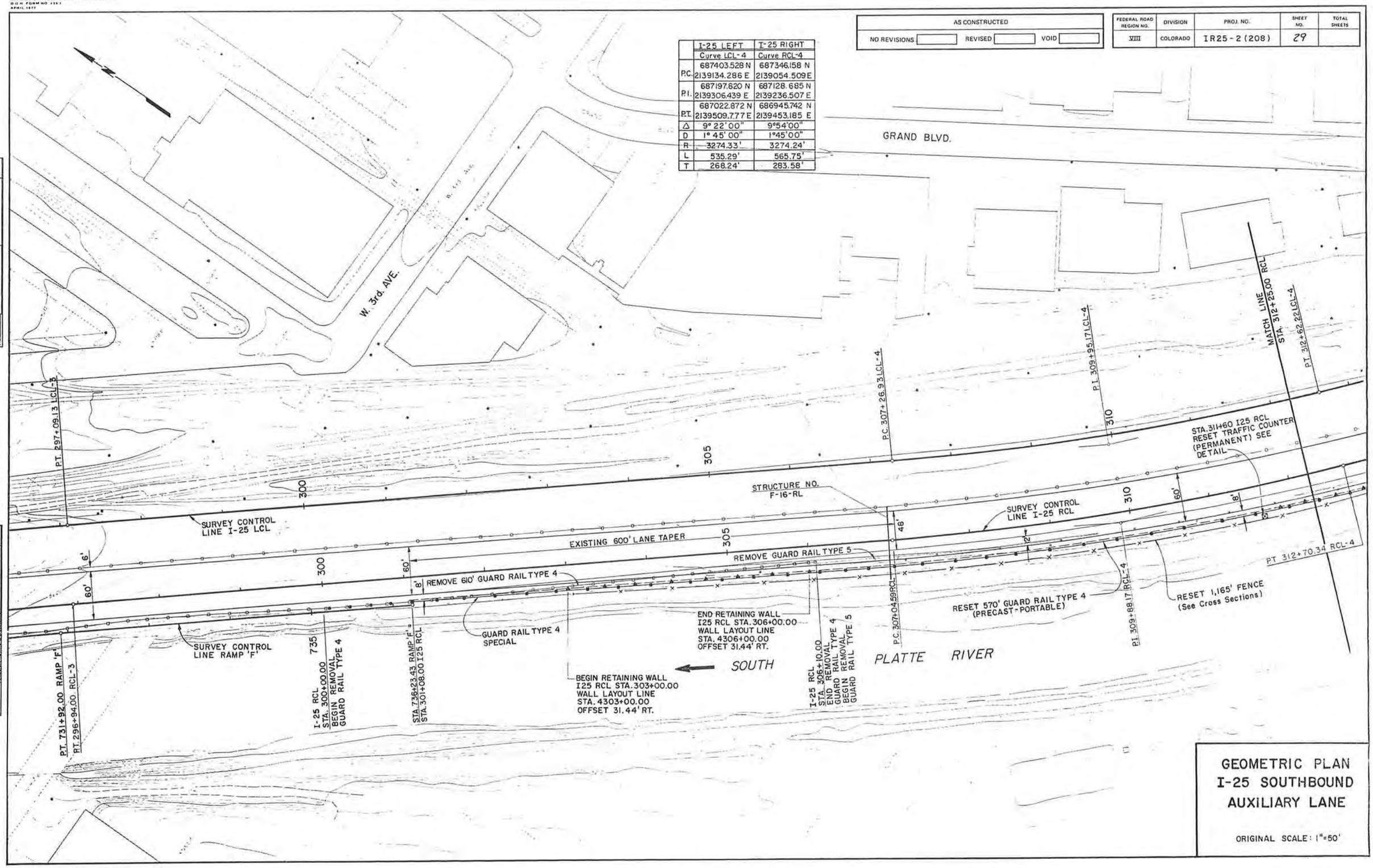

GEOMETRIC PLAN
I-25 SOUTHBOUND AUXILIARY LANE

ORIGINAL SCALE: 1"=50'

NOTE BOOK No. | PLOTTED | ALIGNMENT CHECKED | RT. OF WAY CHECKED

E FN/FEB. 1 1971 | NOTE BOOK No. | PLOTTED | GRADES CHECKED | R.O.W. MONUMENTS | STRUCTURE LOCATIONS CHECKED

	I-25 LEFT	I-25 RIGHT
	Curve LCL-5	Curve RCL-5
T.S.	686660.015 N 2139931.517 E	686608.766 N 2139852.299 E
S.C.	686457.576 N 2140152.767 E	686408.395 N 2140075.424 E
P.I.	686351.303 N 2140290.325 E	686289.790 N 2140230.094 E
C.S.	686192.449 N 2140360.905 E	686110.908 N 2140307.500 E
S.T.	685929.466 N 2140505.033 E	685845.734 N 2140447.557 E
Δ	22°19'00"	23°44'00"
Ls	300.00'	300.00'
Ts	473.34'	494.44'
Δc	11°49'03"	13°14'03"
Dc	3°29'59"	3°29'59"
Rc	1637.14'	1637.14'
Lc	337.67'	378.14'
Os	5°14'59"	5°14'59"
LT	200.09'	200.09'
ST	100.08'	100.08'

AS CONSTRUCTED		
NO REVISIONS	REVISED	VOID

FEDERAL ROAD REGION NO.	DIVISION	PROJ. NO.	SHEET NO.	TOTAL SHEETS
VIII	COLORADO	IR 25-2 (208)	30	

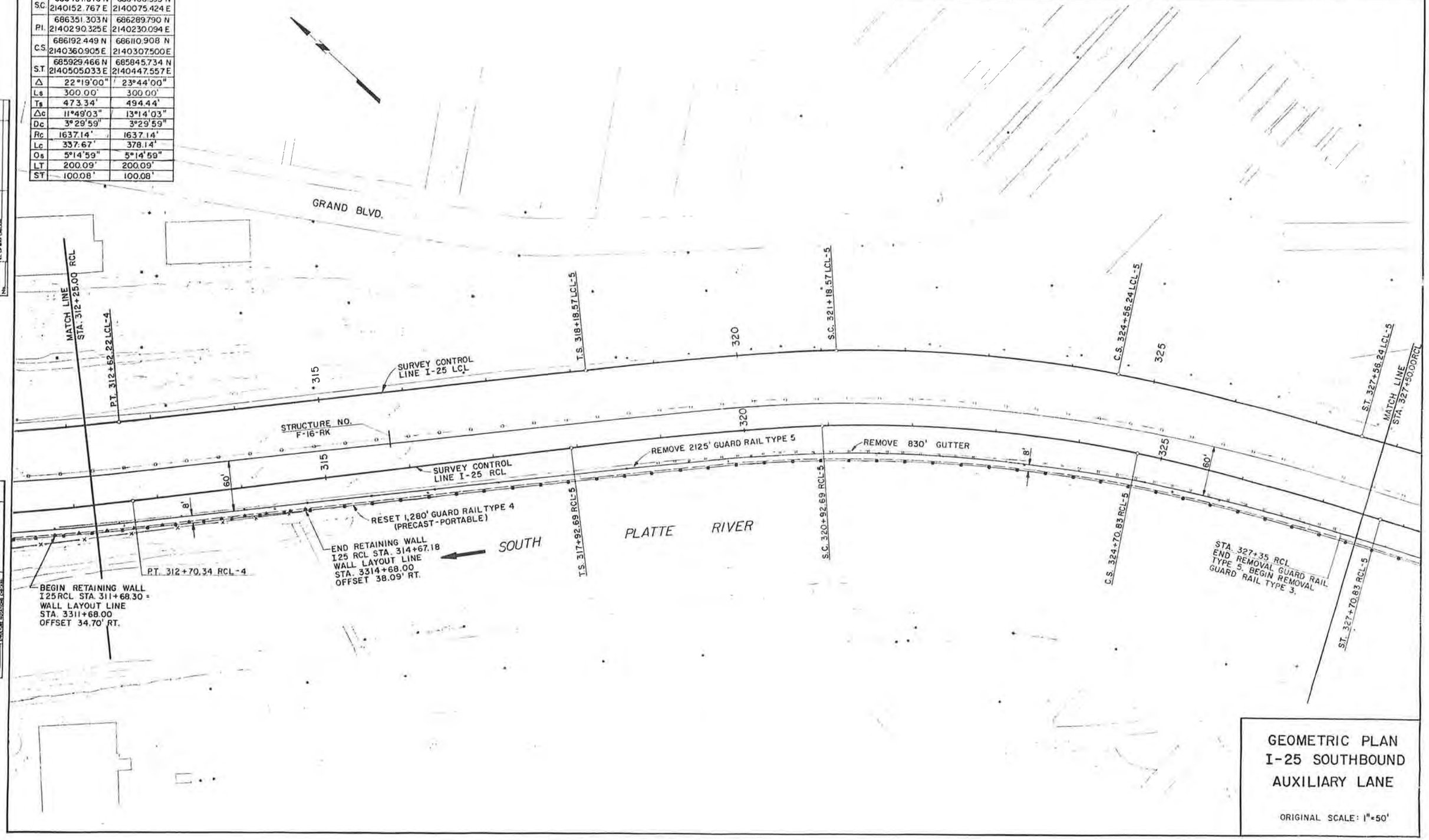

GEOMETRIC PLAN
I-25 SOUTHBOUND AUXILIARY LANE

ORIGINAL SCALE: 1"=50'

DEPT OF HIGHWAYS
HIGHWAYS:
M NO. 126:
984

	I-25 LEFT	I-25 RIGHT
	Curve LCL-6	Curve RCL-6
P.C.	685453.960 N 2140747.056 E	685419.882 N 2140656.106 E
P.I.	685367.050 N 2140791.292 E	685324.074 N 2140703.025 E
P.T.	685278.685 N 2140832.545 E	685227.409 N 2140748.152 E
Δ	1°57'00"	1°04'00"
D	1°00'00"	0°30'00"
R	5730.20'	11,460.28'
L	195.02'	213.35'
T	97.52'	106.68'

AS CONSTRUCTED		
NO REVISIONS	REVISED	VOID

FED.ROAD REGION	DIVISION	PROJ. NO.	SHEET NO.	SHEET TOTALS
VIII	COLO.	IR25-2(208)	31	

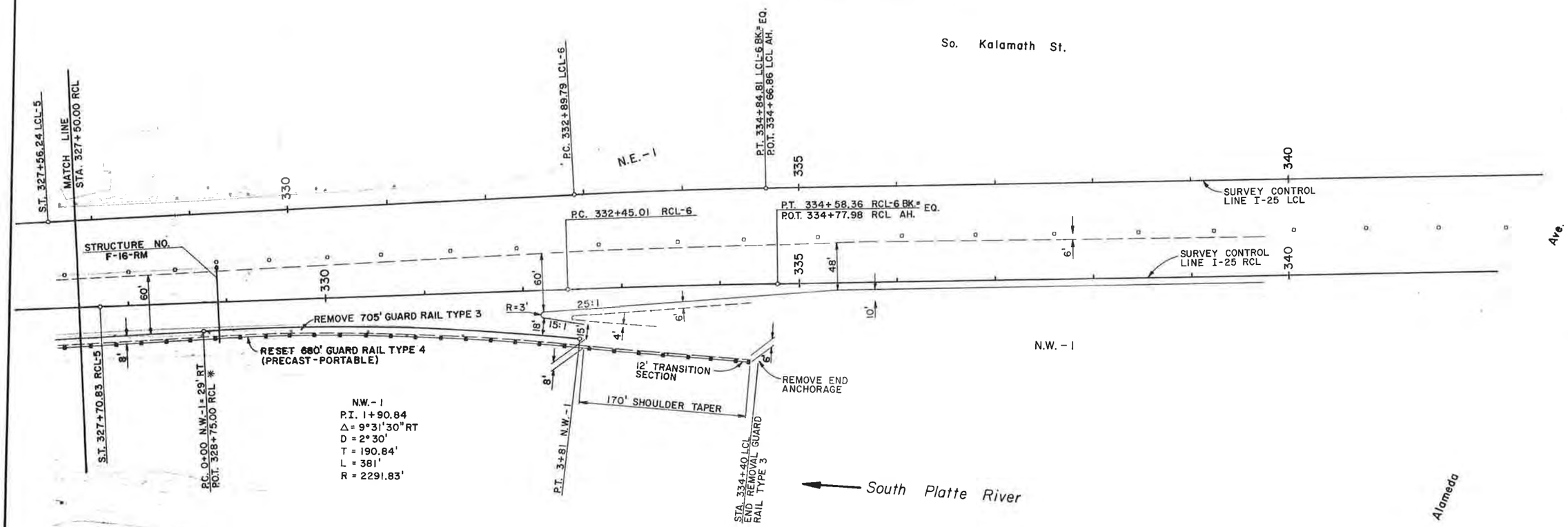

* STATION AND OFFSET APPROXIMATE ONLY

GEOMETRIC PLAN
I-25 SOUTHBOUND AUXILIARY LANE

ORIGINAL SCALE: 1" = 50'

STATE DEPARTMENT OF HIGHWAYS
DIVISION OF HIGHWAYS STATE OF COLORADO
D.O.H. FORM NO. 1267
APRIL 1957

AS CONSTRUCTED		
NO REVISIONS	REVISED	VOID

FEDERAL ROAD REGION NO.	DIVISION	PROJ. NO.	SHEET NO.	TOTAL SHEETS
VIII	COLORADO	IR 25-2(208)	32	

FOR INFORMATION ONLY

GEOMETRIC PLAN RAMP 'B' (Future)

ORIGINAL SCALE 1" = 50' HORZ.

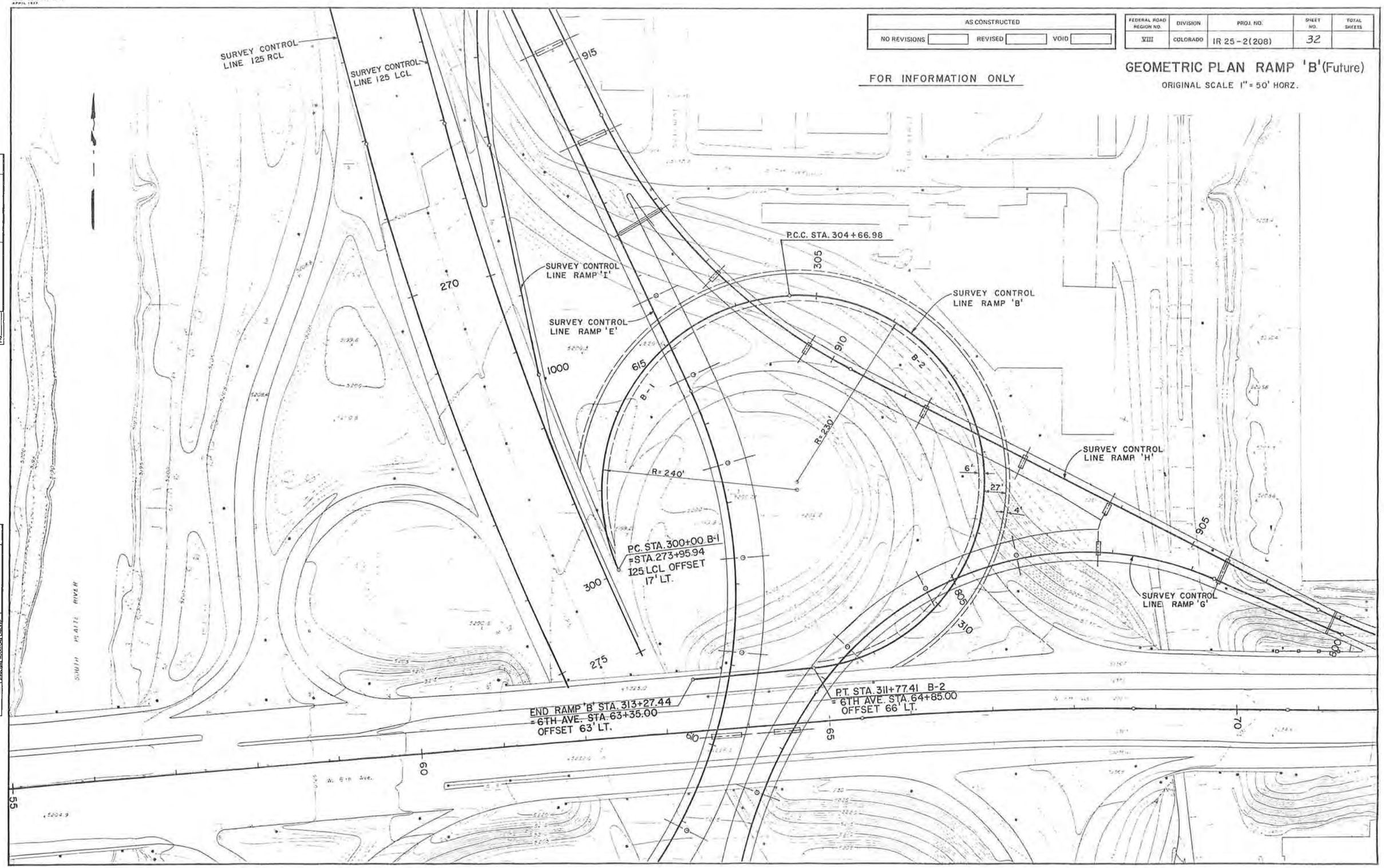

NOTE BOOK No. ALIGNMENT CHECKED. B.M.'s NOTED. STRUCTURE NOTATIONS CHECKED.

NOTE BOOK No. ALIGNMENT CHECKED. B.M.'s NOTED. STRUCTURE NOTATIONS CHECKED.

AS CONSTRUCTED							
NO REVISIONS		REVISED		VOID			

FEDERAL ROAD REGION NO	DIVISION	PROJ. NO	SHEET NO	TOTAL SHEETS
VIII	COLORADO	IR 25-2(208)	33	

FOR INFORMATION ONLY

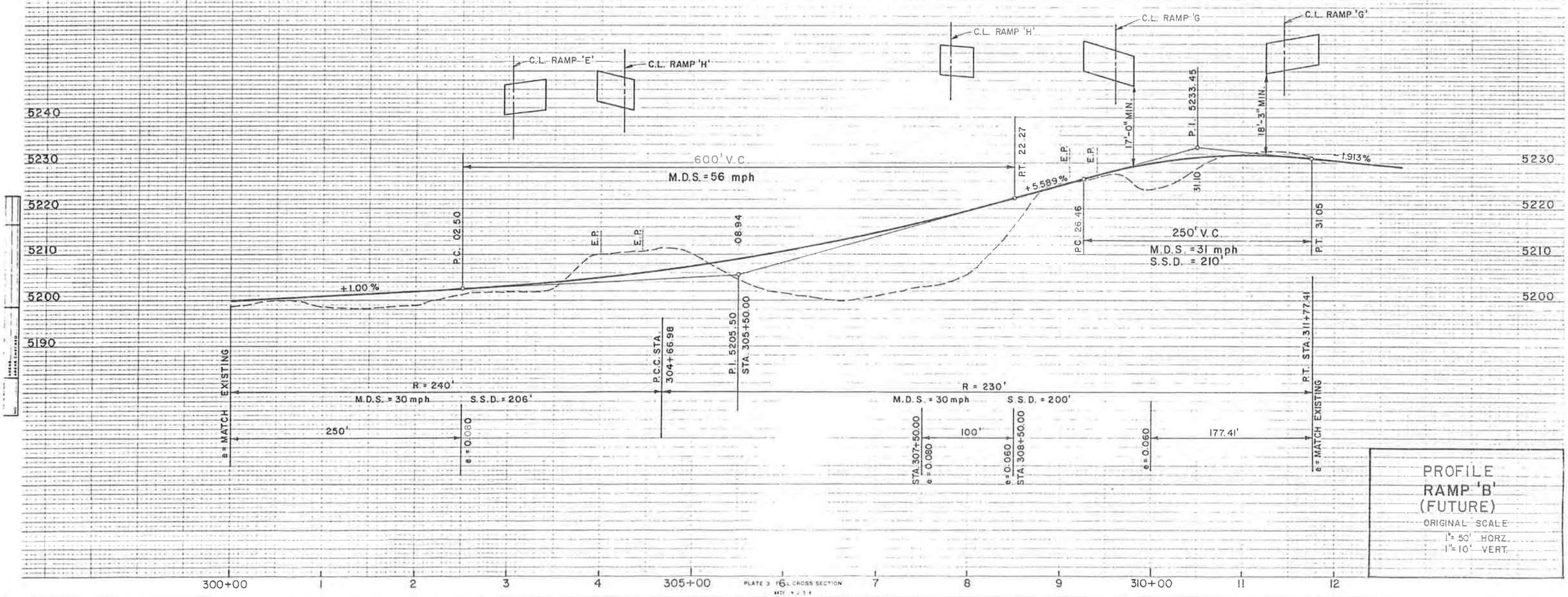

PROFILE
RAMP 'B'
(FUTURE)

ORIGINAL SCALE
1" = 50' HORZ.
1" = 10' VERT.

PLATE 3 16 L CROSS SECTION

DEPARTMENT OF HIGHWAYS
DIVISION OF HIGHWAYS - STATE OF COLORADO
ENG 215

AS CONSTRUCTED							
NO REVISIONS		REVISED		VOID			

FEDERAL ROAD REGION NO	DIVISION	PROJ NO	SHEET NO	TOTAL SHEETS
VIII	COLORADO	IR 25-2(208)	33	

FOR INFORMATION ONLY

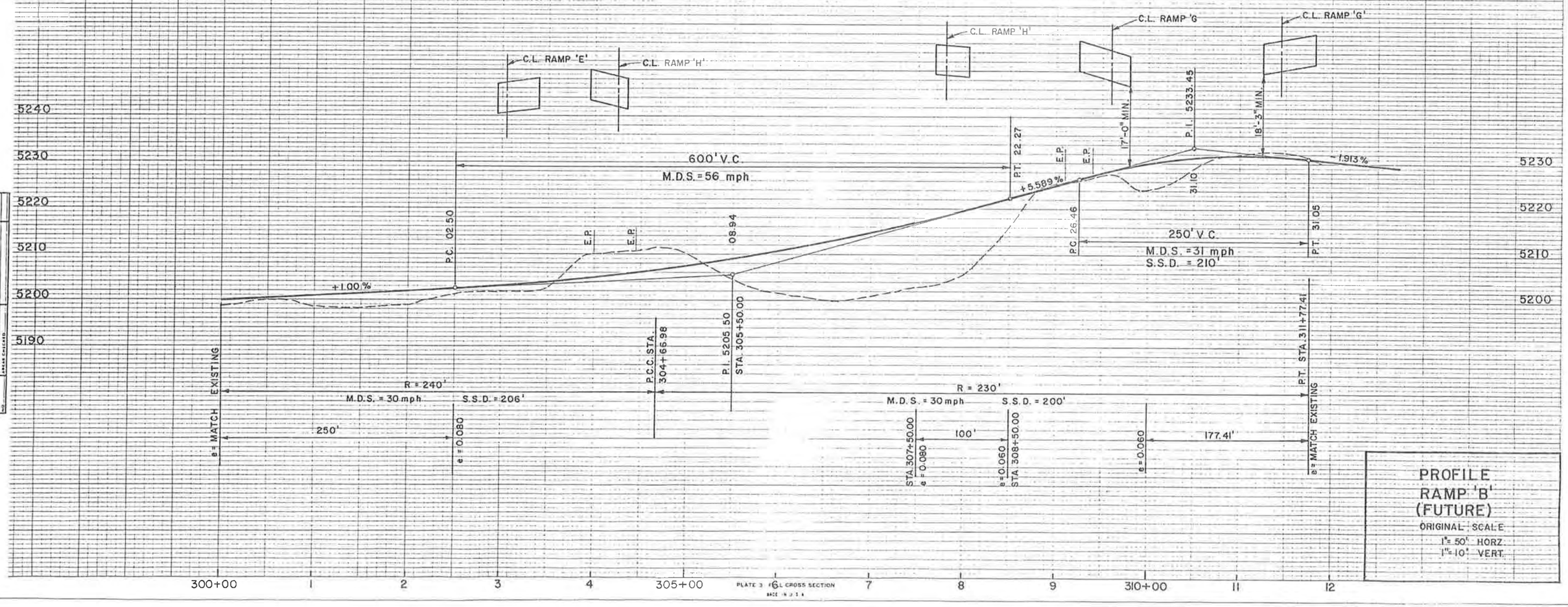

PROFILE
RAMP 'B'
(FUTURE)
ORIGINAL SCALE
1" = 50' HORZ.
1" = 10' VERT.

17700
MENT OF HIGHWAYS
HIGHWAYS:
M NO. 125:
384

AS CONSTRUCTED			FED.ROAD REGION	DIVISION	PROJ. NO.	SHEET NO.	SHEET TOTALS
NO REVISIONS	REVISED	VOID	VIII	COLO.	IR25-2(208)	34	

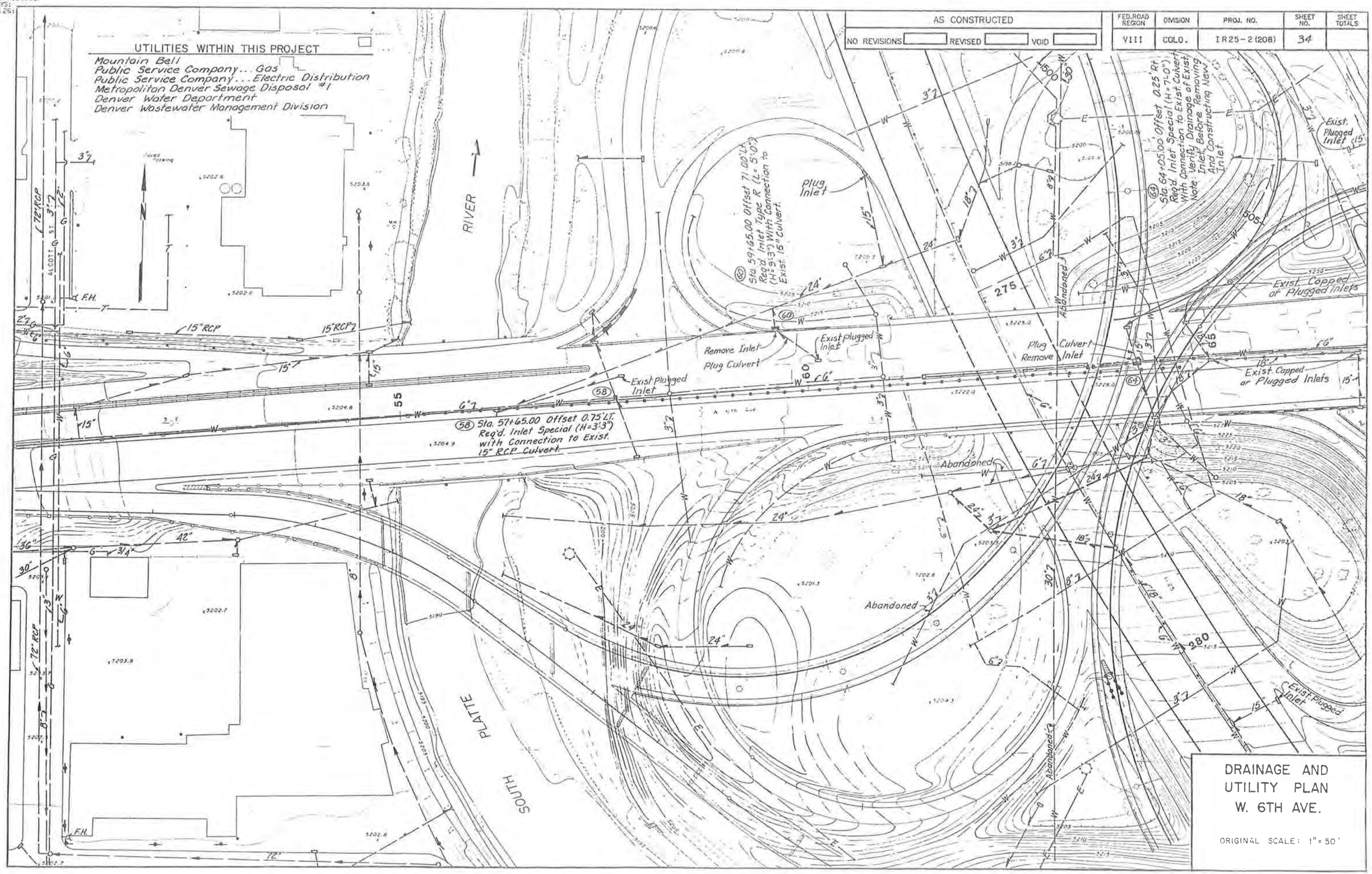

DEPT OF HIGHWAYS
HIGHWAYS:
NO. 126:
04

AS CONSTRUCTED			
NO REVISIONS	REVISED	VOID	

FED. ROAD REGION	DIVISION	PROJ. NO.	SHEET NO.	SHEET TOTALS
VIII	COLO.	IR25-2(208)	35	

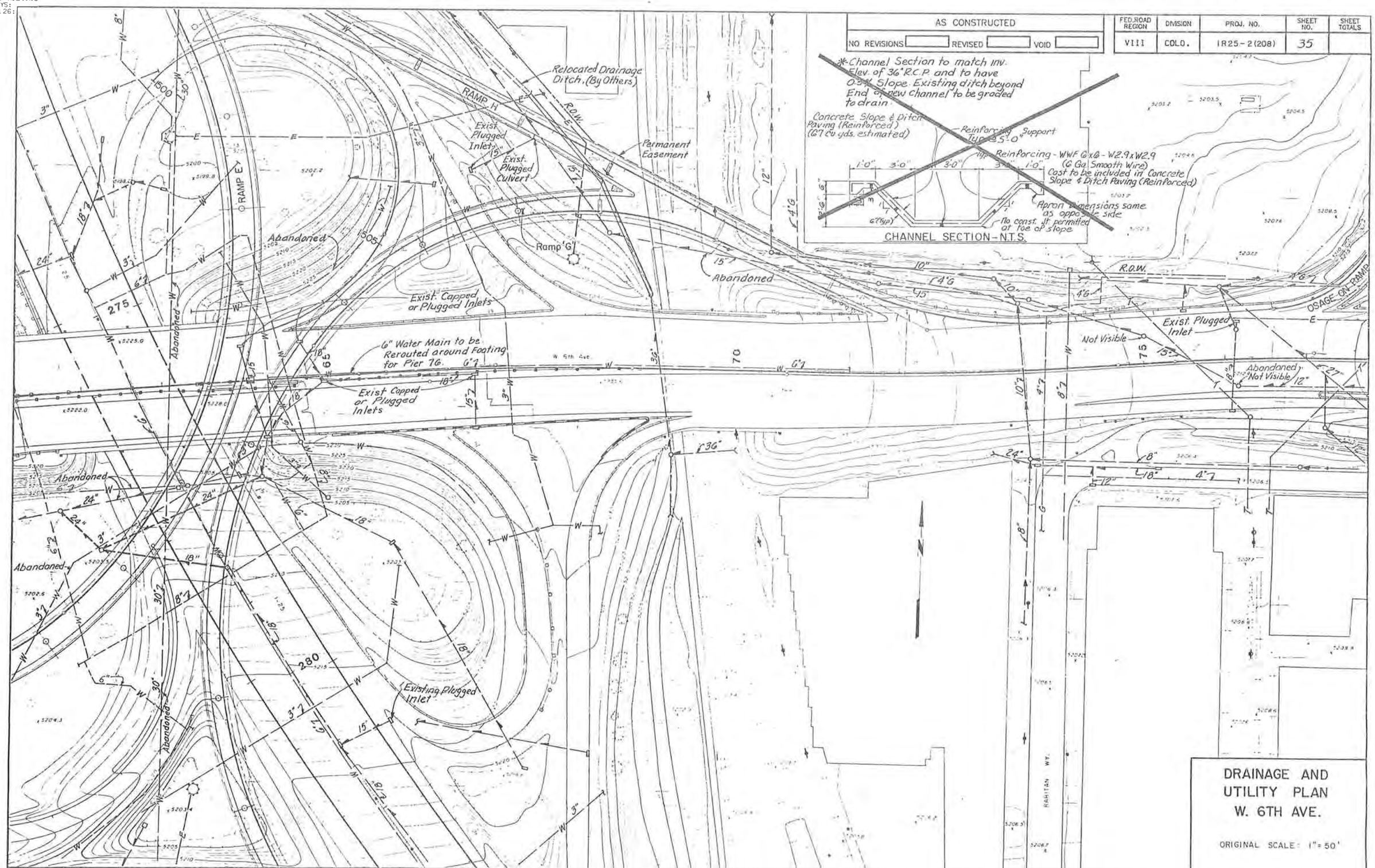

DRAINAGE AND UTILITY PLAN
W. 6TH AVE.

ORIGINAL SCALE: 1" = 50'

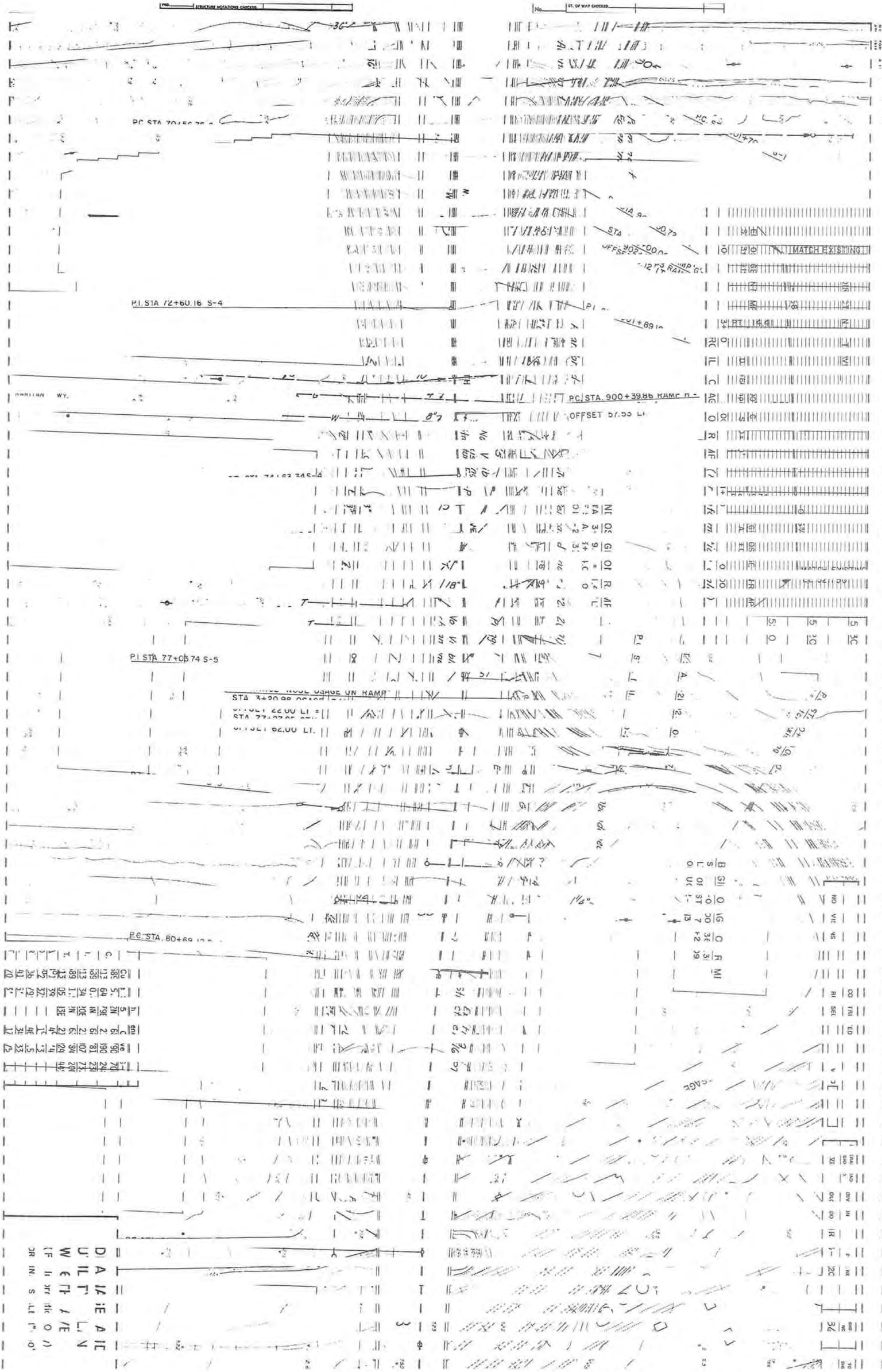
STRUCTURE NOTATIONS CHECKED
ST. OF WAY CHECKED
PC STA. 70+56.78
P.I. STA. 72+60.16 S-4
MATCH EXISTING
PC STA. 900+39.86 KAMP
OFFSET 57.55 LT.
P.I. STA. 77+05.74 S-5
STA. 3+20.98 ROUE USAGE DN KAMP
OFFSET 22.00 LT.
OFFSET 62.00 LT.
PC STA. 80+69.13
DIAMETER
OUTER
WEIGHT
(IF INSIDE DIAMETER)

AS CONSTRUCTED		
NO REVISIONS	REVISED	VOID

FEDERAL ROAD REGION NO.	DIVISION	PROJ. NO.	SHEET NO.	TOTAL SHEETS
VIII	COLORADO	IR 25-2 (208)	37	

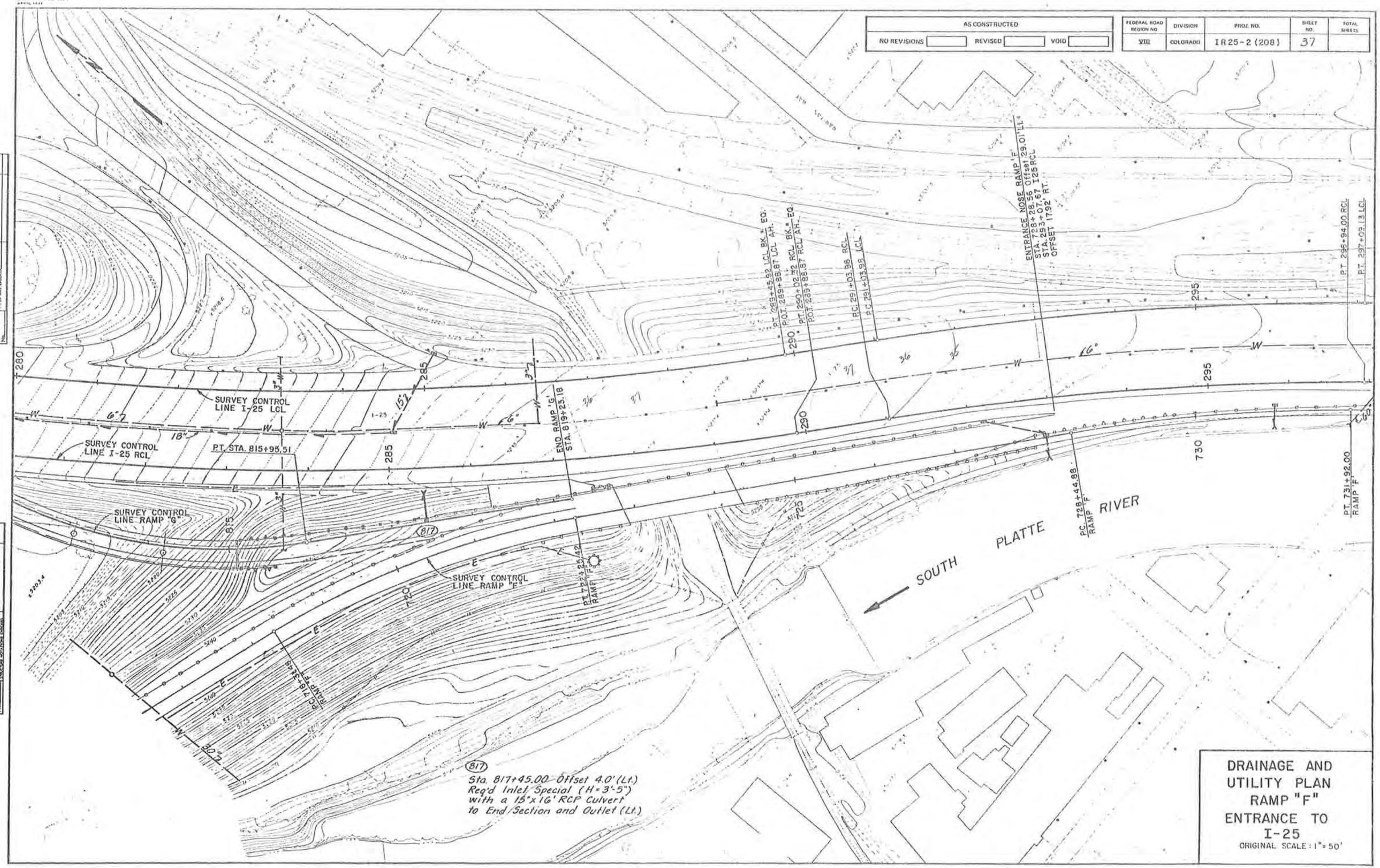

DRAINAGE AND UTILITY PLAN
RAMP "F"
ENTRANCE TO
I-25

ORIGINAL SCALE: 1" = 50'

STATE DEPARTMENT OF HIGHWAYS
DIVISION OF HIGHWAYS STATE OF COLORADO
DOH FORM NO 1341
APRIL 1977

AS CONSTRUCTED		
NO REVISIONS	REVISED	VOID

FEDERAL ROAD REGION NO.	DIVISION	PROJ. NO.	SHEET NO.	TOTAL SHEETS
VIII	COLORADO	IR25-2(208)	38	

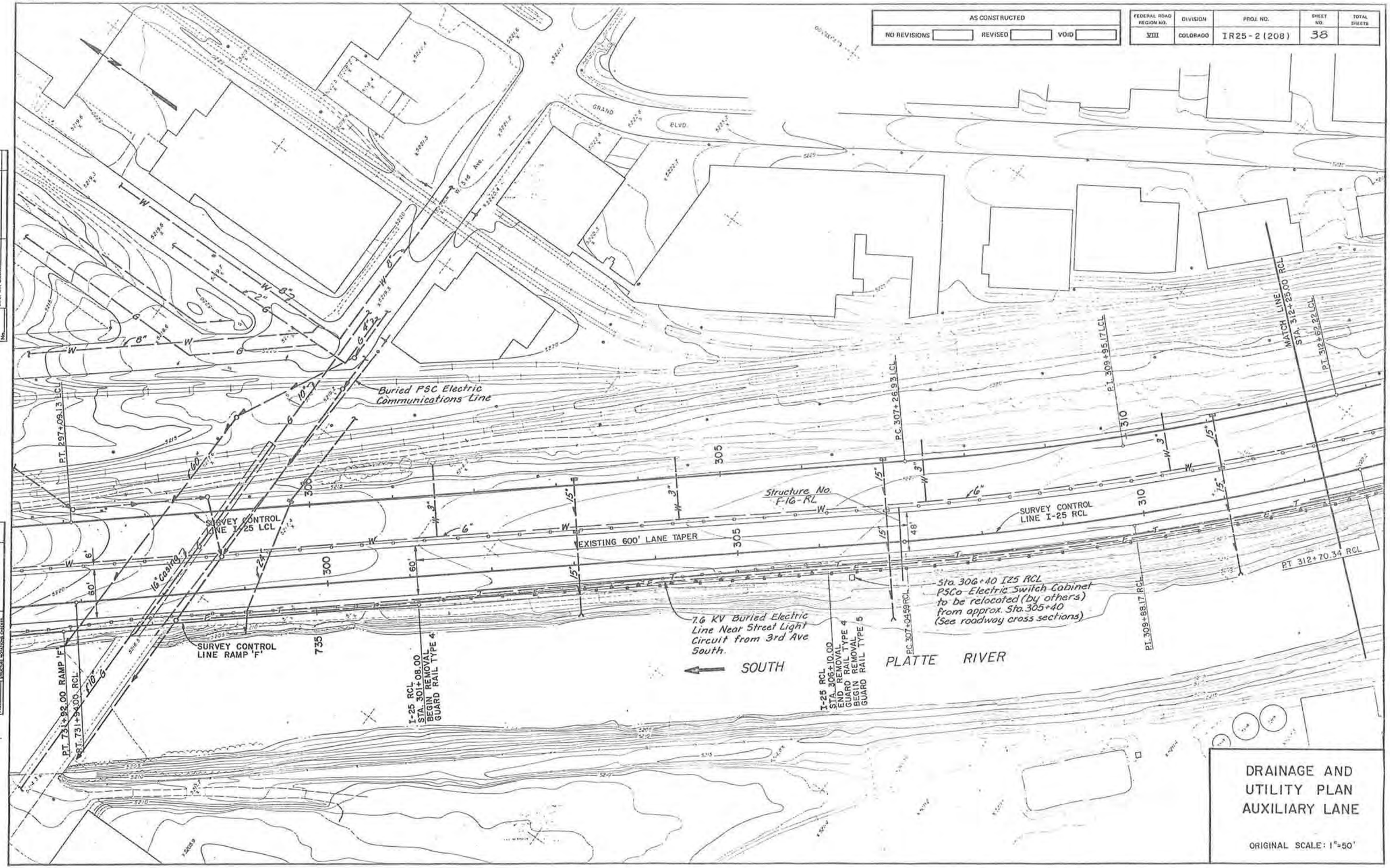

DRAINAGE AND UTILITY PLAN AUXILIARY LANE

ORIGINAL SCALE: 1"=50'

NOTE BOOK | GRADES CHECKED | B. M.'S NOTED | STRUCTURE DIMENSIONS CHECKED | No.

STATE DEPARTMENT OF HIGHWAYS
DIVISION OF HIGHWAYS STATE OF COLORADO
B.E.H. FORM NO. 1201
APRIL 1977

AS CONSTRUCTED		
NO REVISIONS	REVISED	VOID

FEDERAL ROAD REGION NO.	DIVISION	PROJ. NO.	SHEET NO.	TOTAL SHEETS
VIII	COLORADO	IR 25-2 (208)	39	

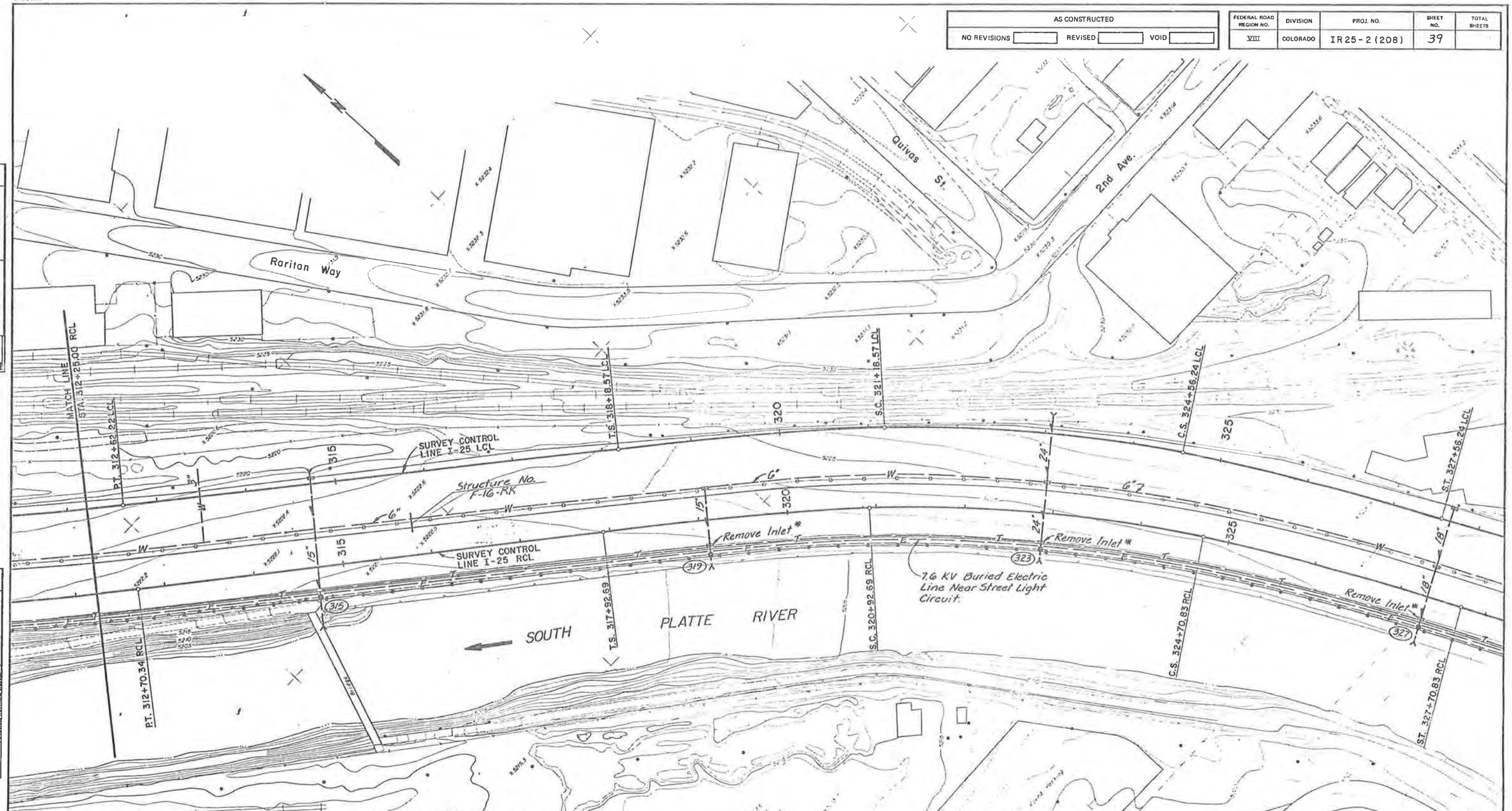

* Connect RCP Culvert Across Exist. Inlet location. Cost to be included in Removal of Structures and Obstructions.

(315) Sta. 314+70.00 Offset 34.7' (Rt.) Req'd. Inlet Special (H=7'-6") with Connection to Exist. 15" RCP Culvert.

(319) Sta. 319+10.00 Offset 39.0' (Rt.) Req'd. Inlet Special (H=5'-6") with Connection to Exist. 15" RCP Culvert.

(323) Sta. 322+90.00 Offset 39.5' (Rt.) Req'd Inlet Special (H=8'-0") with Connection to Exist. 24" RCP Culvert.

(327) Sta. 327+32.00 Offset 37.0' (Rt.) Req'd Inlet Special (H=9'-0") with Connection to Exist. 18" RCP Culvert.

DRAINAGE AND UTILITY PLAN AUXILIARY LANE

ORIGINAL SCALE: 1"=50'

AS CONSTRUCTED								
NO REVISIONS		REVISED		VOID				
FED.ROAD REGION	DIVISION	PROJ. NO.	SHEET NO.	SHEET TOTALS				
VIII	COLO.	IR25-2(208)	40					

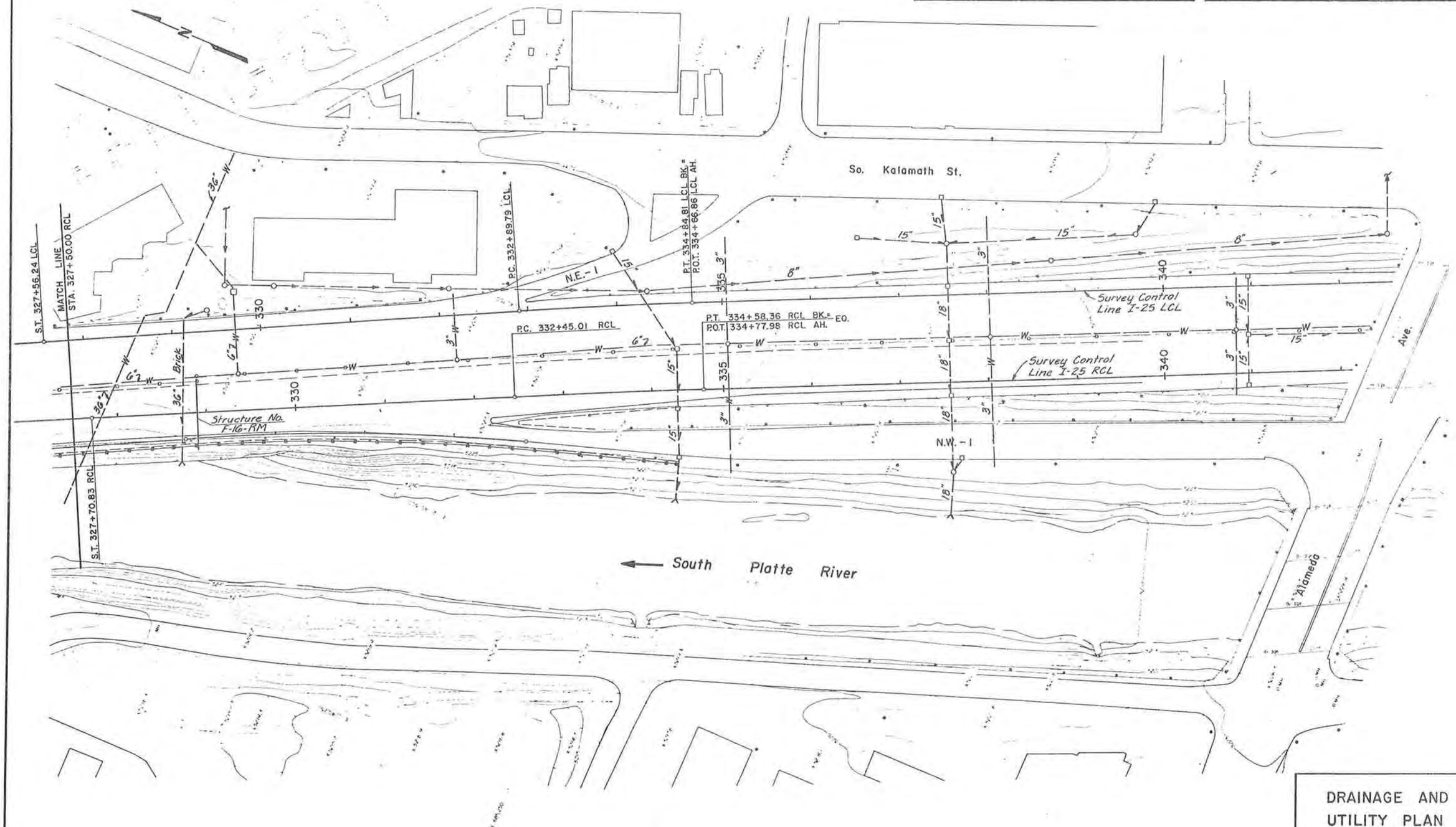

DRAINAGE AND
UTILITY PLAN
AUXILIARY LANE

ORIGINAL SCALE: 1" = 50'

AS CONSTRUCTED							
NO REVISIONS		REVISED		VOID			

FEDERAL ROAD REGION NO	DIVISION	PROJ NO	SHEET NO	TOTAL SHEETS
VIII	COLORADO	IR25-2(208)	41	

Structure Excavation
$\frac{18.5\,(4.25)(3.25)}{27} \approx 10$ Cu. Yds.

Structure Backfill
$\frac{18.5\,(10.15)}{27} \approx 7$ Cu. Yds.

Embankment
$\frac{14.5\,(2.66)}{27} \approx 1$ Cu. Yd.

Excavation for Riprap ▲▲▲
$\frac{1.5\,(6.25)(3.15)}{27} \approx 1$ Cu. Yd.

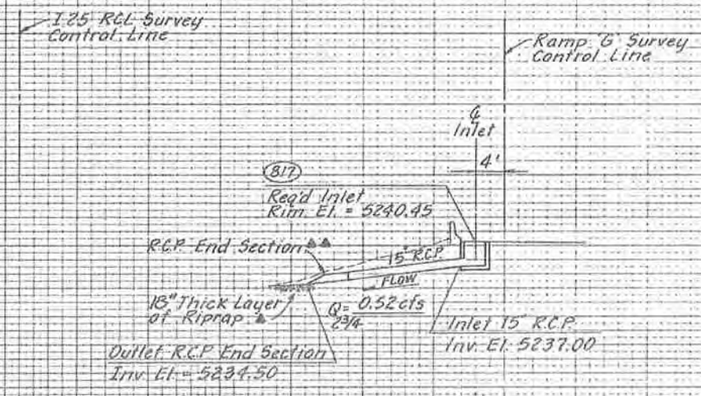

▲ See Standard M-601-1C for Dimensions. Riprap will not be paid for separately but shall be included in the work.

▲▲ See Standard M-603-10 for Dimensions.

▲▲▲ Paid for as Structure Excavation

(BIT)
Req'd Inlet Special (H=3'-5")
(Ramp 'G' Sta. 817+45.00 Offset 4' Lt)
with a 15"x16' R.C.P. Culvert to End Section and Outlet (Lt).

Note: See Drainage and Utility Plans for Location of Utilities.

For Type R Inlet:
Rim Elevation is to Top of Manhole, ℄ of Inlet is to match ℄ of existing/new Curb and Gutter, and Station Offset is to ℄ of Inlet.

* Elevation approximate only. Actual elevation and final adjustment to be made during construction as directed by the Engineer.

** Existing 15" R.C.P. not verified. Verify drainage of existing inlet and connect new inlet to existing line.

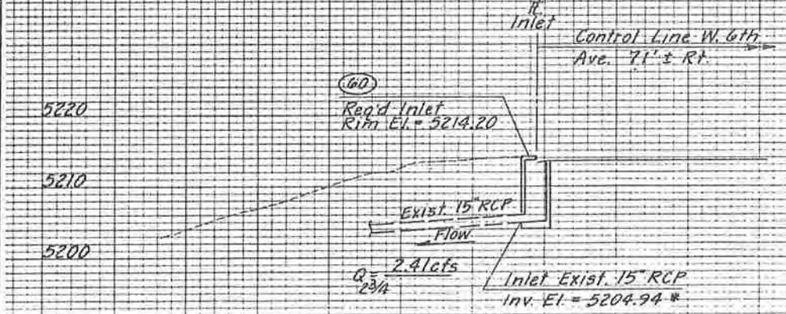

(60)
Req'd Inlet Type R (L=5'-0")(H=9'-3")
(Sta. 59+65.00 Offset 71.00' Lt) with connection to exist. 15" R.C.P. Culvert (Lt).

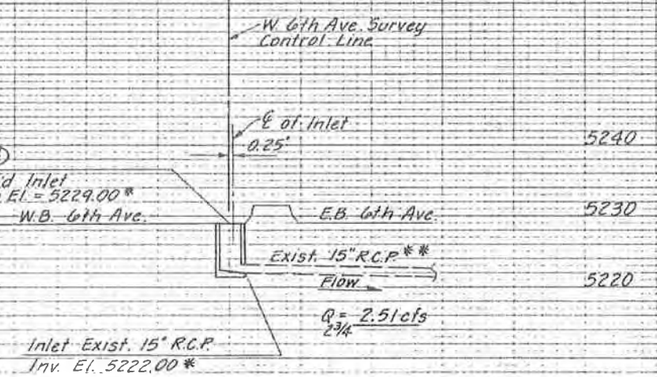

(64)
Req'd Inlet Special (H=7'-0")
(Sta. 64+05.00 Offset 0.25' Rt)
with connection to exist. 15" R.C.P. Culvert (Rt).

DRAINAGE CROSS SECTIONS

AS CONSTRUCTED		
NO REVISIONS	REVISED	VOID

FEDERAL ROAD REGION NO.	DIVISION	PROJ. NO	SHEET NO	TOTAL SHEETS
VIII	COLORADO	IR25-2(208)	42	

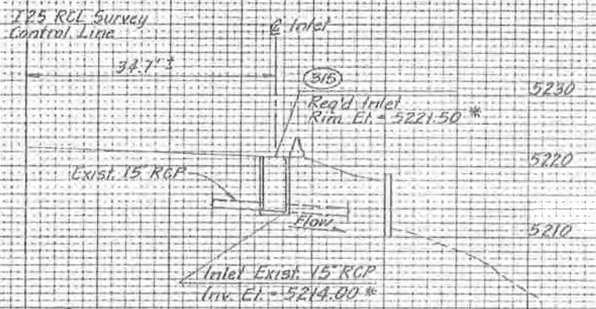

315
Req'd Inlet Special (H=7'-6")
(Sta. 314+70.00 Offset approx. 34.7' Rt.)
With Connection to Exist. 15" RCP
Culvert.

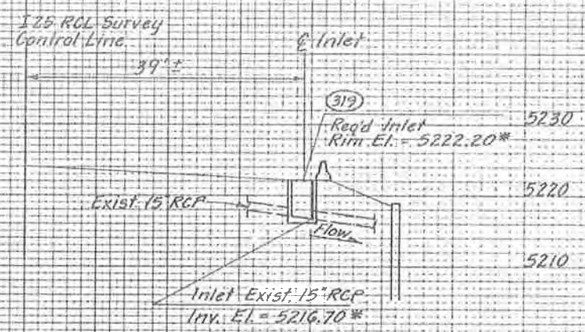

319
Req'd Inlet Special (H=5'-6")
(Sta. 319+10.00 Offset approx. 39' Rt.)
With Connection to Exist. 15" RCP
Culvert.

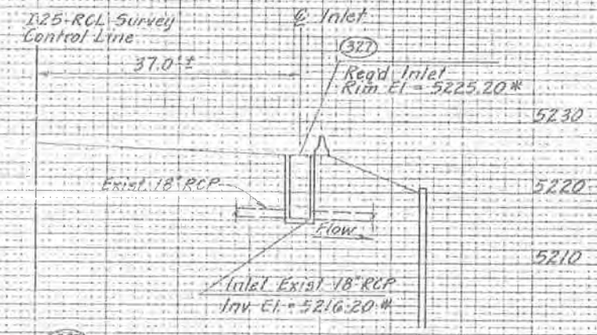

327
Req'd Inlet Special (H=9'-0")
(Sta. 327+32.00 Offset approx. 37' Rt.)
With connection to Exist. 18" RCP
Culvert.

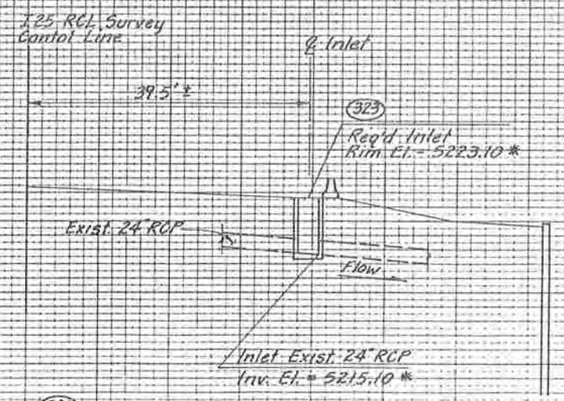

323
Req'd Inlet Special (H=8'-6")
(Sta. 322+90.00 Offset approx. 39.5' Rt.)
With Connection to Exist. 24" RCP
Culvert.

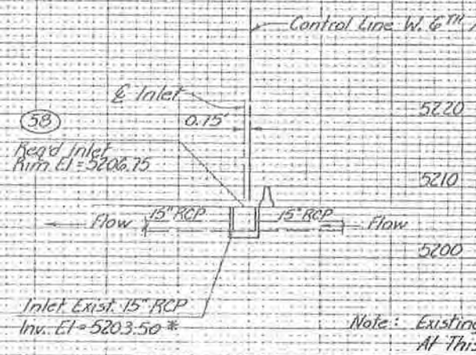

Note: Existing Capped Inlet Possible At This Location.

58
Req'd Inlet Special (H=3'-3")
(Sta. 57+65.00 Offset 0.75' Lt.)
With Connection to Exist. 15" RCP
Culvert.

Note: See Drainage and Utility Plans for Location of Utilities.

* Elevation approximate only. Actual elevation and final adjustment to be made during construction as directed by the Engineer.

DRAINAGE CROSS SECTIONS

AS CONSTRUCTED			
NO REVISIONS	REVISED	VOID	

FEDERAL ROAD REGION NO	DIVISION	PROJ NO	SHEET NO	TOTAL SHEETS
VIII	COLORADO	IR 25-2(208)	43	

GENERAL NOTES

GUARD RAIL TYPE 4 (SPECIAL) SHALL BE CAST IN PLACE AND COLORED TO MATCH BRIDGE RAIL TYPE 4 THIS PROJECT.

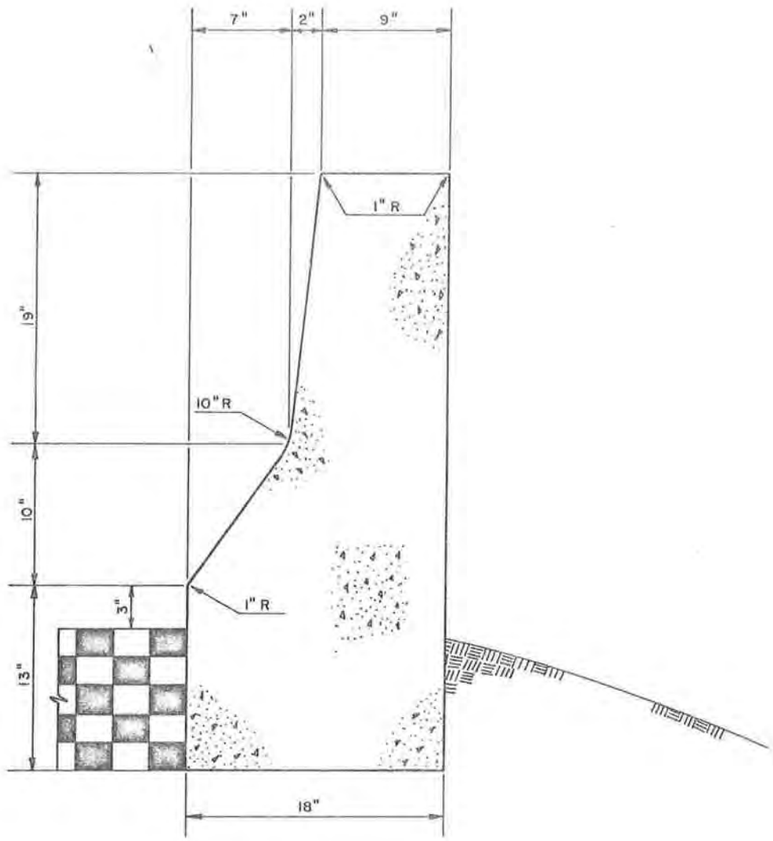

DETAIL FOR GUARD RAIL TYPE 4 (SPECIAL)

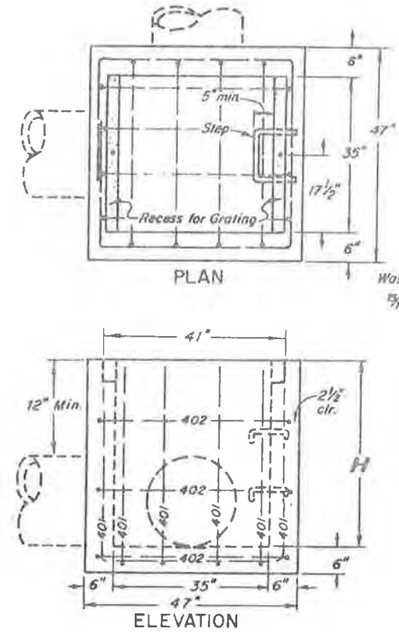

PLAN

ELEVATION

CONCRETE INLET

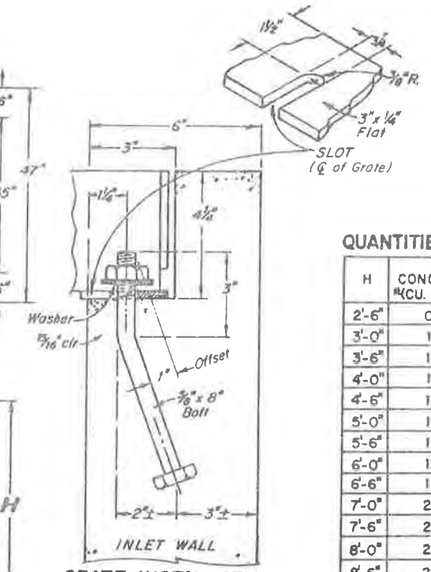

GRATE INSTALLATION DETAIL

QUANTITIES FOR ONE INLET

H	CONCRETE #(CU. YDS.)	REINF. STEEL (LBS.)	NO. STEPS REQ'D.
2'-6"	0.9	75	0
3'-0"	1.0	80	0
3'-6"	1.2	96	0
4'-0"	1.3	101	1
4'-6"	1.4	116	2
5'-0"	1.5	122	2
5'-6"	1.7	137	2
6'-0"	1.8	142	3
6'-6"	1.9	158	3
7'-0"	2.0	163	3
7'-6"	2.2	179	4
8'-0"	2.3	184	4
8'-6"	2.4	199	4
9'-0"	2.5	205	5
9'-6"	2.7	220	5
10'-6"	3.0	235	6
11'-6"	3.4	251	6

*Note: Includes Volume occupied by pipes.

BAR LIST FOR H=2'-6" AND BENDING DIAGRAM

MARK	NO. REQ'D	HGT. "U"	LENGTH
401	2	2'-3"	7'-11"
401	6	2'-7"	8'-7"
402	3		18'-0"

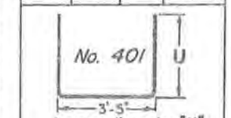

Increase dimension "U" 6" for each 6" increase of H above 2'-6".

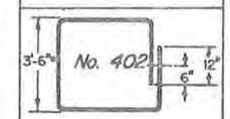

Add one bar for each foot increase of H above 2'-6".

All bars to be ½" Dia.—Cut or bend around pipes as required.

GENERAL NOTES

All work shall be done in accordance with the Standard Specifications applicable to the project.

All concrete shall be Class A or B.

For detail of Inlet Step, see M-Standard "Steps for Manholes and Inlets".

All reinforcing bars shall be deformed, of intermediate grade, and shall be tagged with the station number and bar designation.

All edge distances not marked "clear" are to ℄ of bar.

Concrete slope and ditch paving shall conform to Section 507. Reinforcement for concrete slope paving shall be WWF 4 x 4 - W1.4 x W1.4 or WWF 6 x 6 - W2.1 x W2.1.

Grating shall conform to Section 604.

Inlet grating shall be galvanized as described for Frames, Grates, Covers and Steps in Section 712.

Steps or ladder will be required when Inlet "H" exceeds 3'-6".

Concrete Slope and Ditch Paving will be required when shown on Plans.

Note: The Inlet shall be depressed at least one inch below the pavement surface.

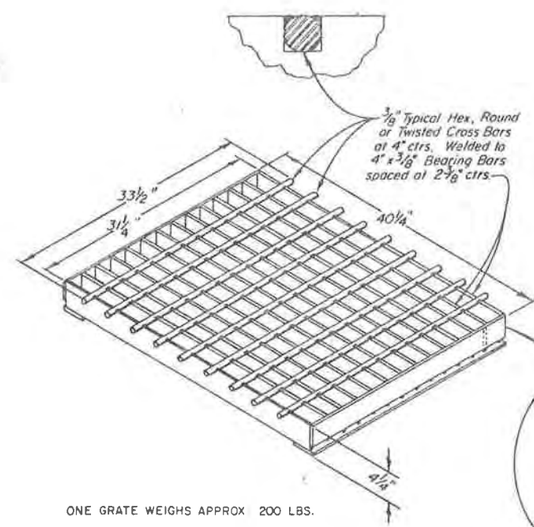

ONE GRATE WEIGHS APPROX 200 LBS.

CLOSE MESH GRATING

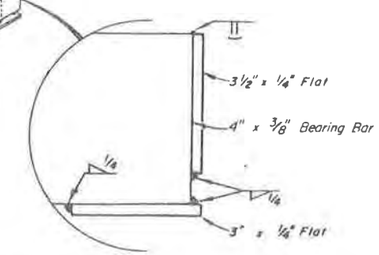

INLET SPECIAL

DRAINAGE AND BARRIER DETAILS

NOT TO SCALE

STATE OF COLORADO
STATE DEPARTMENT OF HIGHWAYS
DIVISION OF HIGHWAYS
H. O. H. FORM NO. 126
REV. FEB. 1984

AS CONSTRUCTED	FED. ROAD REGION	DIVISION	PROJ. NO.	SHEET NO.	SHEET TOTALS
NO REVISIONS ☐ REVISED ☐ VOID ☐	VIII	CO.	IR 25-2(208)	44	

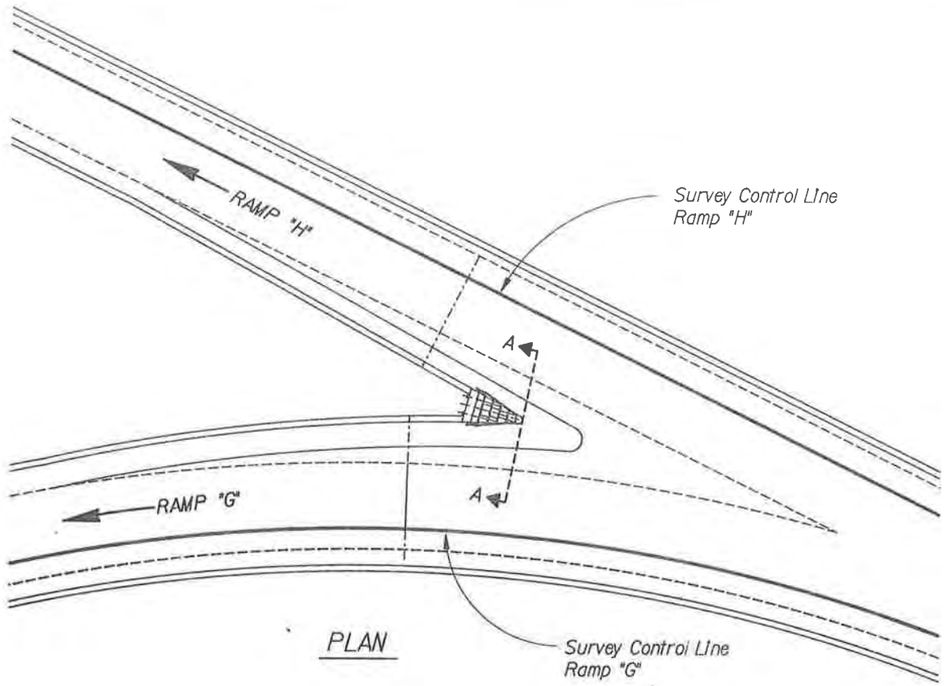

PLAN

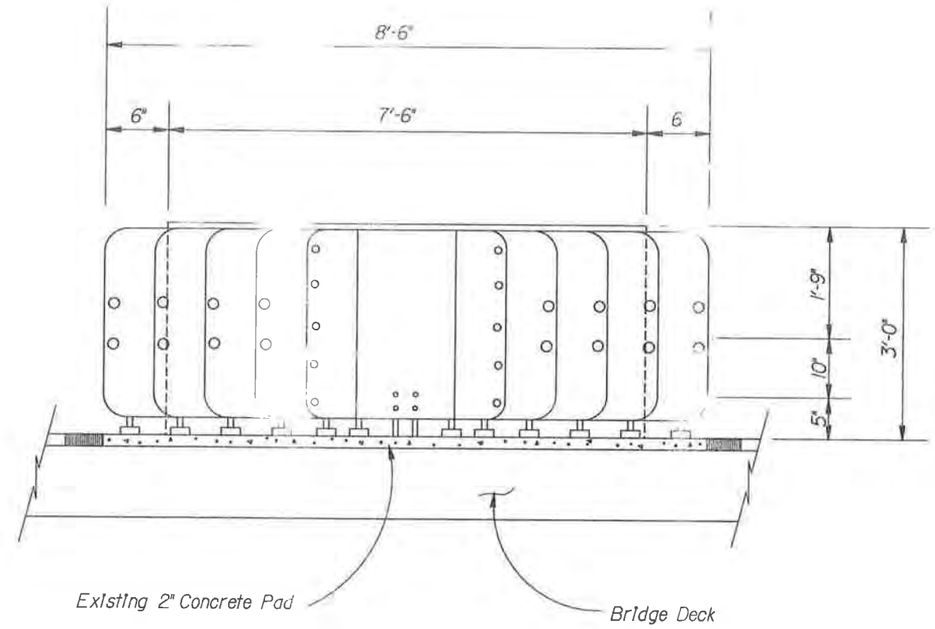

SECTION A - A

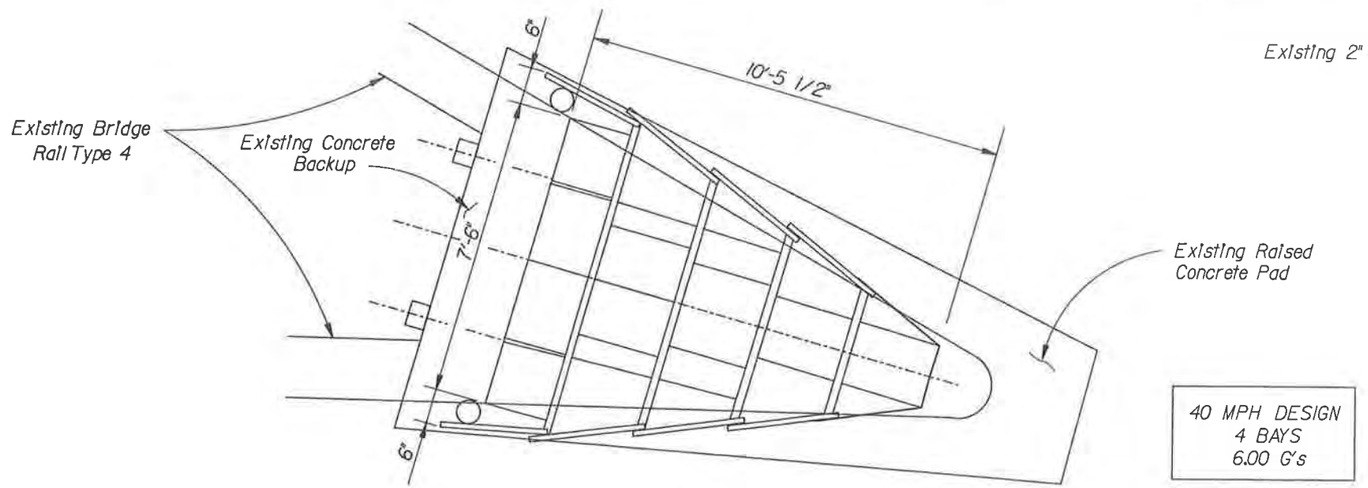

40 MPH DESIGN
4 BAYS
6.00 G's

TERMINAL DETAIL
(HEX-FOAM SANDWICH SYSTEM)

Energy Absorption Systems, Inc.
Model No. 209800H4S
or approved equal

Note: FHWA Allowable Limits
6.0 to 7.5 G's
(12 G's Max.)

IMPACT
ATTENUATOR
DETAILS

NOT TO SCALE

UDAWKPLOTS3TABS.PRF
DATE 24-MAR-1988 - TIME 11:35

STATE OF COLORADO
STATE DEPARTMENT OF HIGHWAYS
DIVISION OF HIGHWAYS
D. O. H. FORM NO. 1261
REV. FEB. 1984

AS CONSTRUCTED						
NO REVISIONS ☐	REVISED ☐	VOID ☐	FED. ROAD REGION	DIVISION	PROJ. NO.	SHEET NO.	SHEET TOTALS
			VIII	COLO.	IR 25-2(208)	45	

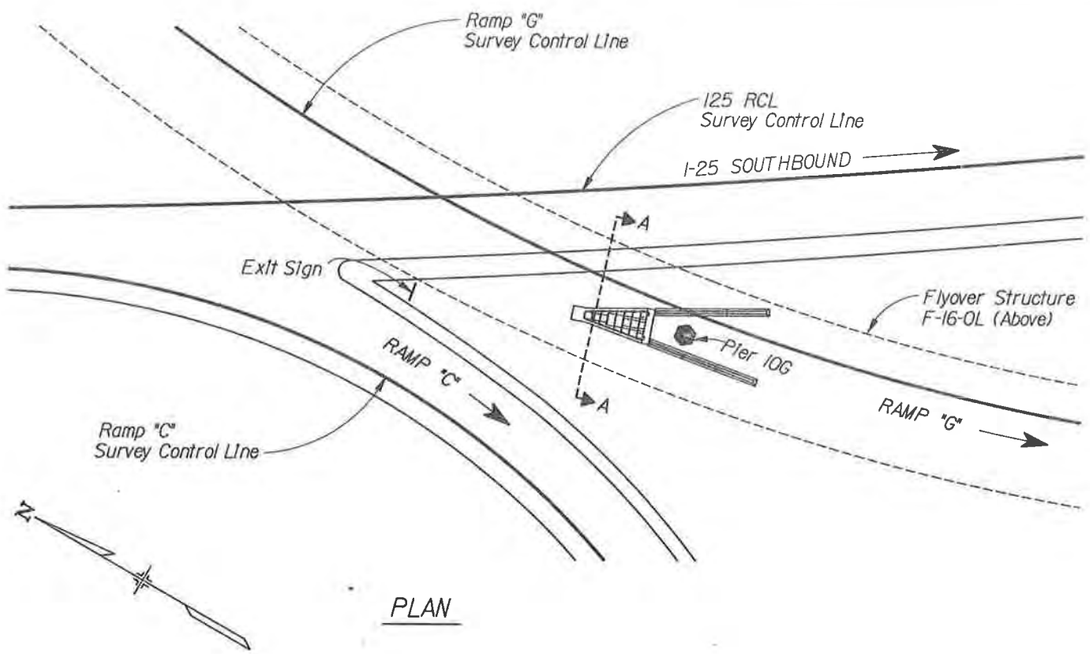

PLAN

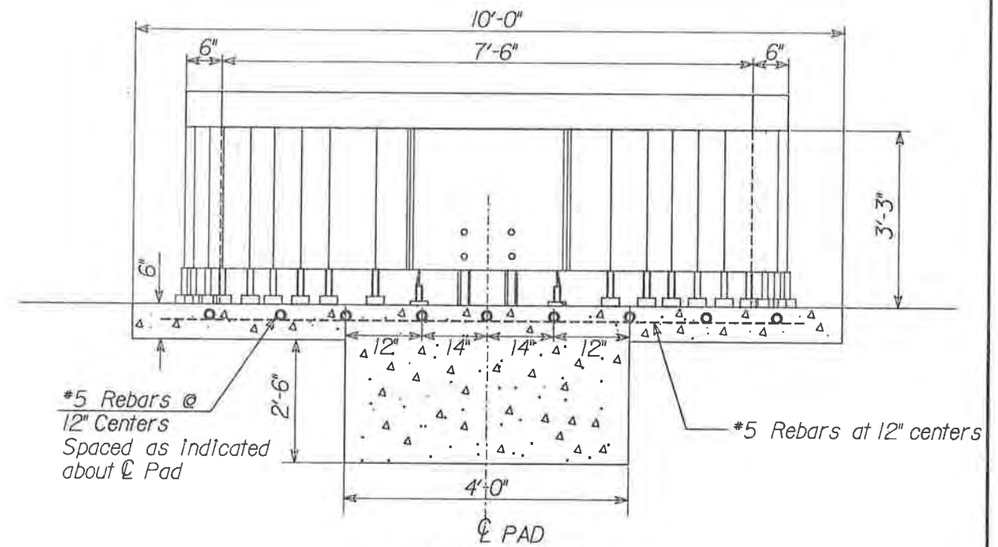

SECTION A-A

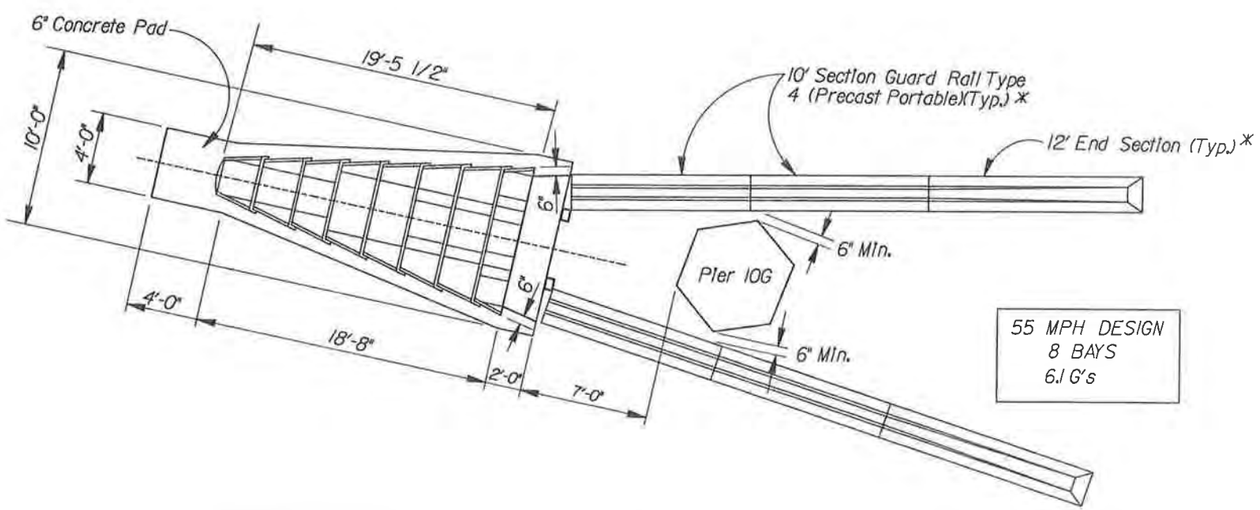

55 MPH DESIGN
8 BAYS
6.1 G's

TERMINAL DETAIL
(HEX-FOAM SANDWICH SYSTEM)
Energy Absorption Systems, Inc.
Model No. 209800H8S
or approved equal

Note: FHWA Allowable Limits
6.0 to 7.5 G's
(12 G's Max.)

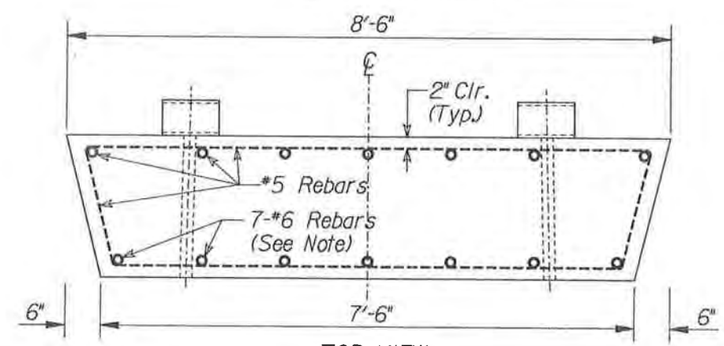

TOP VIEW

CONCRETE BACKUP ASSEMBLY

NOTE: Vertical reinforcement in front face shall be 7-#6 rebars. For walls 1'-6" thick, 10-#7 rebars are required. All other reinforcement shall be #5 rebars at 12" centers.

*Obtained from reset on this project.

IMPACT ATTENUATOR DETAILS

NOT TO SCALE

U:\11\106\JA11ENG.DWN
LOAHEP-LOTSAT.PRF
DATE 6-MAY-1988 - TIME 15:01

STATE OF COLORADO
STATE DEPARTMENT OF HIGHWAYS
DIVISION OF HIGHWAYS
D. O. H. FORM NO. 126
REV. FEB. 1984

AS CONSTRUCTED	FED ROAD REGION	DIVISION	PROJ. NO.	SHEET NO.
NO REVISIONS ____ REVISED ____ VOID ____	VIII	COLO.	IR25-2(208)	46

REFERENCE MONUMENT CAP

ROW MONUMENT CAP

CONTROL MONUMENT CAP

ALIQUOT CORNER CAP

NOTE: (A BLANK CAP MAY BE SUBSTITUTED IF ANY ABOVE CAPS ARE NOT AVAILABLE)

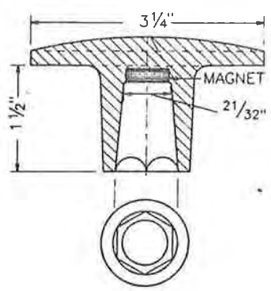

BRASS AND ALUMINUM CAPS

BRASS CAP USED WITH STAINLESS STEEL
ROD ALUMINUM CAP USED WITH ALUMINUM ROD
(Threaded Cap is also available)

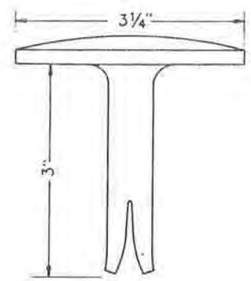

BRASS CAP

FOR PLACING IN EXISTING
CONCRETE OR ROCK

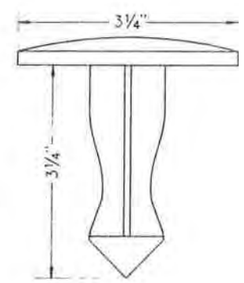

BRASS CAP

FOR PLACING IN EXISTING
CONCRETE OR ROCK

MONUMENT APPLICATION

CAP TYPE	MONUMENT TYPE							
	1	1A	2	2A	3	3A	4	5
REFERENCE	X						X	
ROW	X							X
CONTROL		X	X	X			X	
ALIQUOT CORNER					X	X		
WITNESS POST (WHEN REQUIRED)	X	X	X	X	X			X

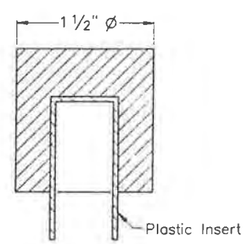

TEMPORARY
ALUMINUM CAP

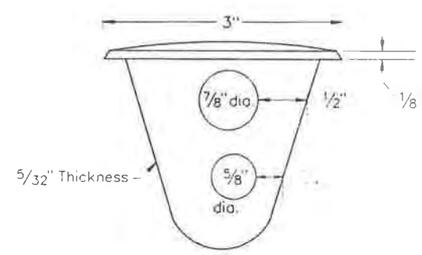

BRASS CAP

INSTALL DURING PLACEMENT OF CONCRETE.
PLACE A REINFORCING BAR THRU ONE HOLE.

TYPE 1 AND TYPE 1A ALUMINUM AND STAINLESS STEEL DRIVEN MONUMENTS

Monuments are assembled by attaching the proper size tip to one end of a section of rod and the 3" long x 3/4" dia. stainless steel driver to the other end. A steel driver is then placed over the stainless steel driver for the hammer to contact. When additional sections of rod are needed, they are to be attached using a set of self-locking washers. Rods are stocked in two foot and three foot sections. One foot sections may be obtained by cutting a two foot section in half. The rod section is driven by using the proper hammer with a soft face. A power adapter is available for use with a gasoline powered driver.

Type 1 monuments typically use a three foot section of rod. When subsurface rock or concrete is encountered less than 3 feet below the ground surface, the rod shall be embedded in the rock or concrete at least 6" with a grout material. The rod may be shortened to accommodate the conditions.

Type 1A monuments may be driven to refusal by threading additional sections onto the first section. Added sections require a set of lock washers. Refusal is defined as one inch of movement with four blows of a 12 lb. hammer. A driven cap is necessary (vs. a threaded cap) when a cut rod is used. The soft faced hammer is also required to seat the driven caps onto the rod.

TYPE 2 AND TYPE 2A ALUMINUM FINNED ROD MONUMENTS

A Type 2 monument is used for horizontal control monuments where loose material is encountered. The larger size tip is to be used on one end of the three foot rod and the fins on the opposite end of the three foot rod are to be bent over to accomodate the cap. If more vertical stability is required for use as a vetical control monument, the added sections which are not finned, should be driven first. The number of sections to be added will vary with needs and type of soil.

Type 1A monument note above also applies to Type 2A monument.

TYPE 3 AND TYPE 3A ALUMINUM PIPE MONUMENTS

This monument is used to monument an aliquot corner. The installation of this monument and record filing shall be done in accordance with the Colorado Revised Statutes, Title 38, Articles 50 and 51. Also refer to the CDOH Survey Manual. The Land Surveyor's license number and the year shall be stamped on the cap.

TYPE 4 BRASS CAP MONUMENT

This monument is placed in concrete, such as bridge super structure concrete. It is placed above a footing support over the abutment or over a pier. An alternate placement is vertically in the abutment wall or pier if only an elevation reference is desired and it is possible to leave access for an elevation rod.

TYPE 5 BRASS CAP MONUMENT

This monument is placed in locations where a Type 1 or Type 1A monument cannot be placed. A common application is in a large boulder where a property corner has been placed. This monument could also be placed in a sidewalk.

WITNESS POSTS

The witness post, when required, will be supplied by the Division and installation shall be included in the work. It shall be driven within 10 feet of the monument, when possible. A delineator post with a 6" x 10" metal sign panel may be used in lieu of the plastic post. This post is to conform to Standard S-612-1.

SELF-LOCKING WASHERS

A set of two washers shall be used at rod joints and threaded cap joints, but not at tip joints.

TEMPORARY MONUMENTS

This cap is used on a #5 rebar.

SURVEY MONUMENTS

04/24/88 20:01:17 NGP1:::(0:\000/DETAIL) SURVEY FP 09000 H099

AS CONSTRUCTED						
NO REVISIONS		REVISED		VOID		

FED. ROAD REGION	DIVISION	PROJ. NO.	SHEET NO.
VIII	COLO.	IR25-2(208)	47

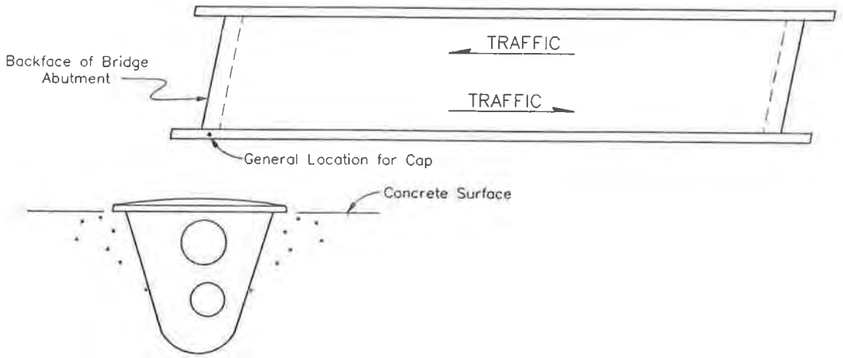

TYPE 4 MONUMENT

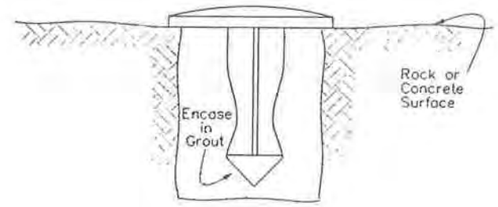

TYPE 5 MONUMENT

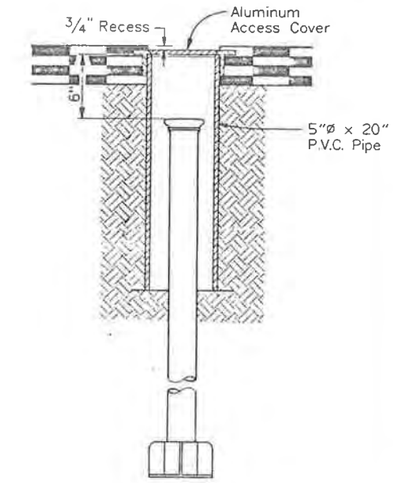

TYPE 3A MONUMENT,
Roadway Installation

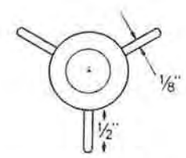

SECTION B-B

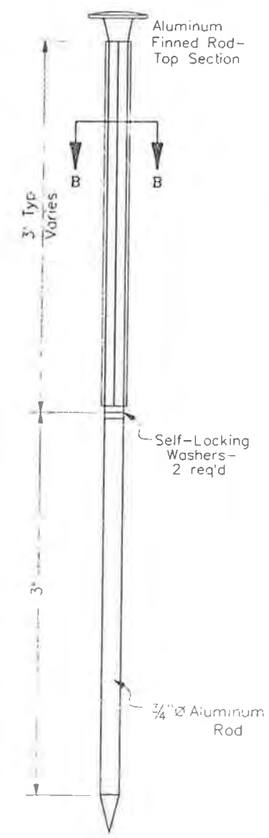

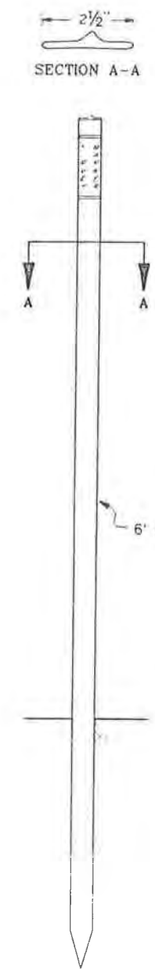

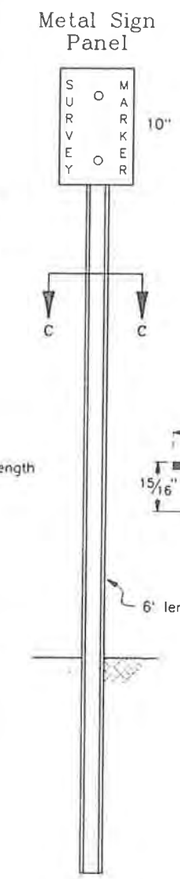

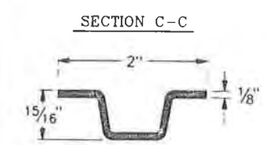

Delineator Post

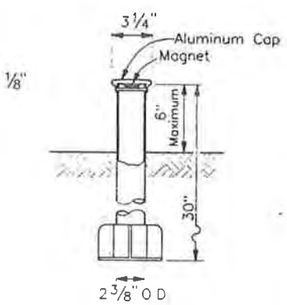

TYPE 3 MONUMENT

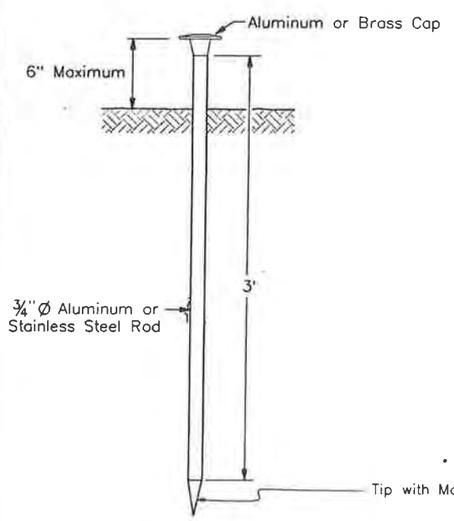

TYPE 1 MONUMENT

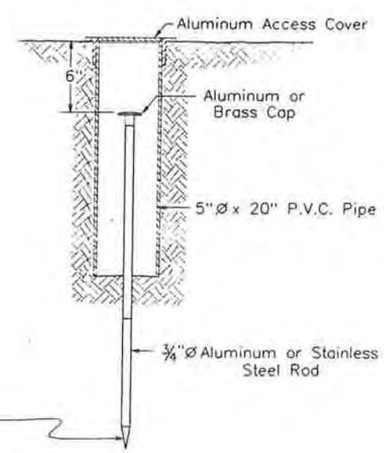

TYPE 1A MONUMENT & TYPE 2A MONUMENT
Includes Monument Box

TYPE 2 MONUMENT

WITNESS POSTS

SURVEY MONUMENTS

AS CONSTRUCTED		
NO REVISIONS	REVISED	VOID

FEDERAL ROAD REGION NO.	DIVISION	PROJ. NO.	SHEET NO.	TOTAL SHEETS
VIII	COLORADO	IR 25-2(208)	48	

DESIGN
DATE

GRADING PLAN AND SEEDING LIMITS

G-1

ORIGINAL SCALE 1" = 50' HORZ.

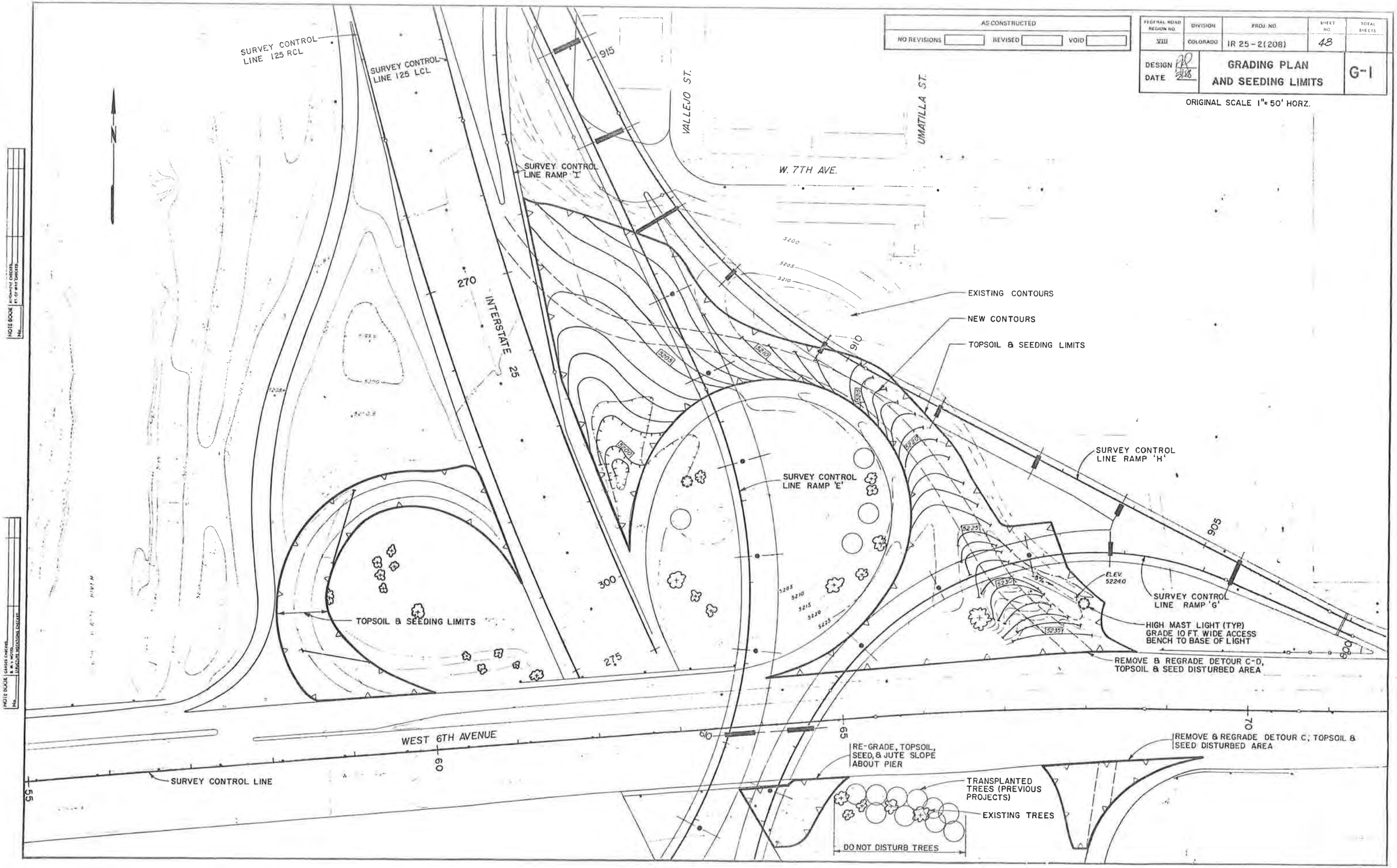

STATE OF COLORADO
STATE DEPARTMENT OF HIGHWAYS
DIVISION OF HIGHWAYS
D. O. H. FORM 10-126
REV. FEB. 1984

AS CONSTRUCTED		
NO REVISIONS	REVISED	VOID

FED.ROAD REGION	DIVISION	PROJ. NO.	SHEET NO.	SHEET TOTALS
VIII	COLO.	IR 25-2(208)	49	

DESIGN
DATE

GRADING PLAN AND SEEDING LIMITS

G-2

1" = 50' 50 0 50 100 scale feet

ORIGINAL SCALE

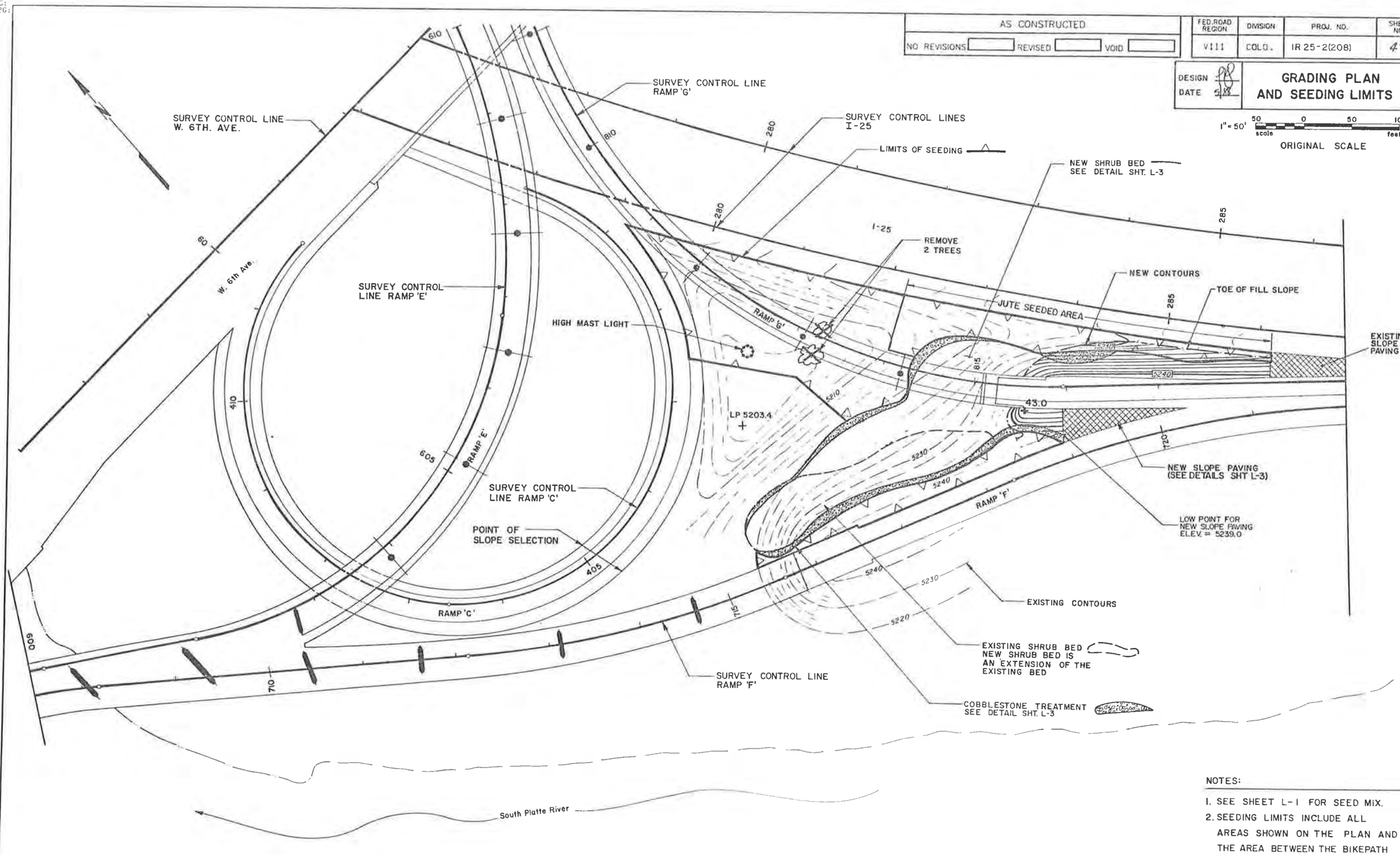

NOTES:

1. SEE SHEET L-1 FOR SEED MIX.
2. SEEDING LIMITS INCLUDE ALL AREAS SHOWN ON THE PLAN AND THE AREA BETWEEN THE BIKEPATH AND I-25 ALONG THE AUXILIARY LANE CONSTRUCTION, APPROX. 0.969 ACRES.
3. FIELD ADJUST COBBLESTONES AT FLOWLINE OF NEW SLOPE PAVING AS NECESSARY TO CATCH RUNOFF.

AS CONSTRUCTED		
NO REVISIONS ☐	REVISED ☐	VOID ☐

FED. ROAD REGION	DIVISION	PROJ. NO.	SHEET NO.	SHEET TOTALS
VIII	COLO.	IR25-2(208)	50	

DESIGN ____ DATE ____	LANDSCAPE SUMMARY	L-1

SUMMARY OF PLANT QUANTITIES - Furnish and Install

Common Name	Botanical Name	Size	Quantity
Redosier Dogwood	Cornus Stolonifera	5 Foot	15
Washington Hawthorn	Crataegus Phaenopyrum	5 Foot	15
Marshall Seedless Ash	Fraxinus Pennsylvanica Marshall	2½ Inch Caliper	19
Jackman Bush Cinquefoil	Potentilla Fruticosa "Jackmani"	18 Inch	100
Shrub Rose	Scarlet Meidiland	No. 1 Gallon	175
Wood's Rose	Rosa Woodsii	12 Inch	65
Wayfaringtree Viburnum	Viburnum Lantana	3 Foot	21
FLOWERING PERENNIALS			
Oxeye Daisy	Chrysanthemum Leucanthemum	No. 1 Gallon	275
Blanketflower	Gaillardia Aristata	No. 1 Gallon	210
Daylilies*	Hemerocallis Sp.	No. 1 Gallon	1525
Bearded Iris	Iris Germanica varieties	No. 1 Gallon	875
Purple Aster	Aster Porteri 'Wartburg Star'	No. 1 Gallon	2840

SUMMARY OF LANDSCAPE QUANTITIES

Item No. & Description		Pay Unit-Rate	Quantity	Remarks
212	Seeding (Lawn)	Acre - 60 Lbs/Acre	6.0	See below for species.
213	Mulching (Hydraulic)	Acre - 1 Ton/Acre	6.0	See Notes 2, 3 & 4.
213	Erosion Bales	Each	50	For temporary erosion control.
213	Soil Retention Blanket (Jute)	Square Yard	6653	See Note 7.
213	Metal Landscape Border (3/16 X 10 Inch)	Lin. Foot	1830	For Planting Beds
213	Mulching (Wood Chip)	Cubic Foot	11625	For Planting Beds
214	Flowering Perennial (No. 1 Gallon size)	Each	5725	See Summary of Plant Quantities for species
420	Geotextile (Weed Barrier)	Square Yard	4640	For Planting Beds
610	Median Cover Material (Stone)	Ton	227	See Cobblestone Detail

SEED MIX - Furnish and Install

- For Information Only -

Common Name	Botanical Name	P.L.S. LBS./Acre	Project Total
Falcon Tall Fescue	Festuca Arundinacea 'Falcon'	25	150
Reuben Canada Bluegrass	Poa Compressa 'Reuben'	10	60
Lincoln Smooth Brome	Bromus Inermis 'Lincoln'	25	150
	Total	60 P.L.S.LBS.	360 P.L.S.LBS.
	Total Acres	6.0	

*Daylily species shall include:

- 508 each of a variety with early-season bloom time and red to red-orange colors.
- 508 each of a variety with mid-season bloom time and yellow colors.
- 509 each of a variety with late-season bloom time and red, orange or yellow colors.

1525 total

Approval by District Landscape Architect for all Daylily species mandatory prior to Installation.

GENERAL NOTES

1. SEEDING (LAWN) SHALL INCLUDE THE APPLICATION OF FERTILIZER AND SEED COMPOSED OF THE SPECIES AND RATES LISTED BELOW. FERTILIZER FOR SEEDING (LAWN) SHALL BE DIAMMONIUM PHOSPHATE WITH AN AVAILABLE NUTRIENT ANALYSIS OF 18N-46P-0K APPLIED AT A RATE OF 400 LBS./ACRE. THE FERTILIZER SHALL BE TILLED INTO THE TOP 4 INCHES OF SOIL (NOT HYDROFERTILIZED) PRIOR TO SEEDING. SEEDING (LAWN) SHALL BE APPLIED USING HYDRAULIC SEEDING EQUIPMENT IN A SLURRY MIX THAT ENSURES UNIFORM DISTRIBUTION OF THE SEED ON THE SLOPES. A HYDROMULCH CONSISTING OF WOOD CELLULOSE FIBERS AND TACKIFIER (BINDER) SHALL BE APPLIED IMMEDIATELY FOLLOWING HYDROSEEDING.
2. MULCHING (HYDRAULIC) SHALL INCLUDE THE APPLICATION OF WOOD CELLULOSE FIBERS AND TACKIFIER (NOT PAID FOR SEPERATELY) OVER ALL SEEDING (LAWN) AREAS. RATE OF HYDRAULIC WOOD CELLULOSE MULCH SHALL BE 1 TON /ACRE AND TACKIFIER (BINDER) RATE SHALL BE 100 LBS/ACRE.
3. HYDRAULIC SEEDING AND MULCHING EQUIPMENT SHALL BE SIZED TO CONFORM TO THE QUANTITY AND SIZE OF SEED OR MULCH APPLIED SO AS TO MAXIMIZE EQUIPMENT PERFORMANCE, MINIMIZE WASTE OF MATERIALS, CONTROL SPRAY, AND MEET COVERAGE SPECIFICATIONS.
4. WATER USED FOR HYDRAULIC SEEDING AND MULCHING WILL NOT BE PAID FOR SEPARATELY, BUT SHALL BE INCLUDED IN THE WORK.
5. SEEDING (LAWN) LIMITS SHALL INCLUDE ALL DESIGNATED AREAS ON SHEETS G-1 & G-2, ALL AREAS DISTURBED BETWEEN THE BIKEPATH AND I-25 ALONG THE AUXILIARY LANE CONSTRUCTION (APPROX. 0.96 ACRE) AND ANY OTHER AREA DISTURBED BY CONSTRUCTION OR AT THE DIRECTION OF THE ENGINEER.
6. THE HEALTH AND MAINTENANCE (WATERING) OF ALL EXISTING TREES AND SHRUBS DESIGNATED TO REMAIN SHALL BE THE RESPONSIBILITY OF THE CONTRACTOR DURING THE CONSTRUCTION PERIOD. LOSS OF TREES OR SHRUBS BECAUSE OF NEGLECT WILL RESULT IN REPLACEMENT IN KIND AND SIZE BY THE CONTRACTOR AT THEIR OWN EXPENSE.
7. SOIL RETENTION BLANKET (JUTE) SHALL BE APPLIED OVER SEEDED AND MULCHED AREAS AS DESIGNATED ON THE PLANS AND SHALL INCLUDE THE ENTIRE AREA BETWEEN THE BIKEPATH AND I-25 ALONG THE AUXILIARY LANE CONSTRUCTION (APPROX. 4690 SQ. YDS.).

INITIAL	DATE	CHECKED BY	QUANTITIES BY	CHECKED BY
DESIGNED BY	CHECKED BY	DETAILED BY		

STATE OF COLORADO
STATE DEPARTMENT OF HIGHWAYS
DIVISION OF HIGHWAYS
W. G. H. FORM D.1251
REV. FEB. 1964

AS CONSTRUCTED		
NO REVISIONS	REVISED	VOID

FED. ROAD REGION	DIVISION	PROJ. NO.	SHEET NO.	SHEET TOTALS
VIII	COLO.	IR 25-2(208)	51	

DESIGN
DATE

LANDSCAPE PLAN

L-2

1" = 50' scale — 50 0 50 100 feet

ORIGINAL SCALE

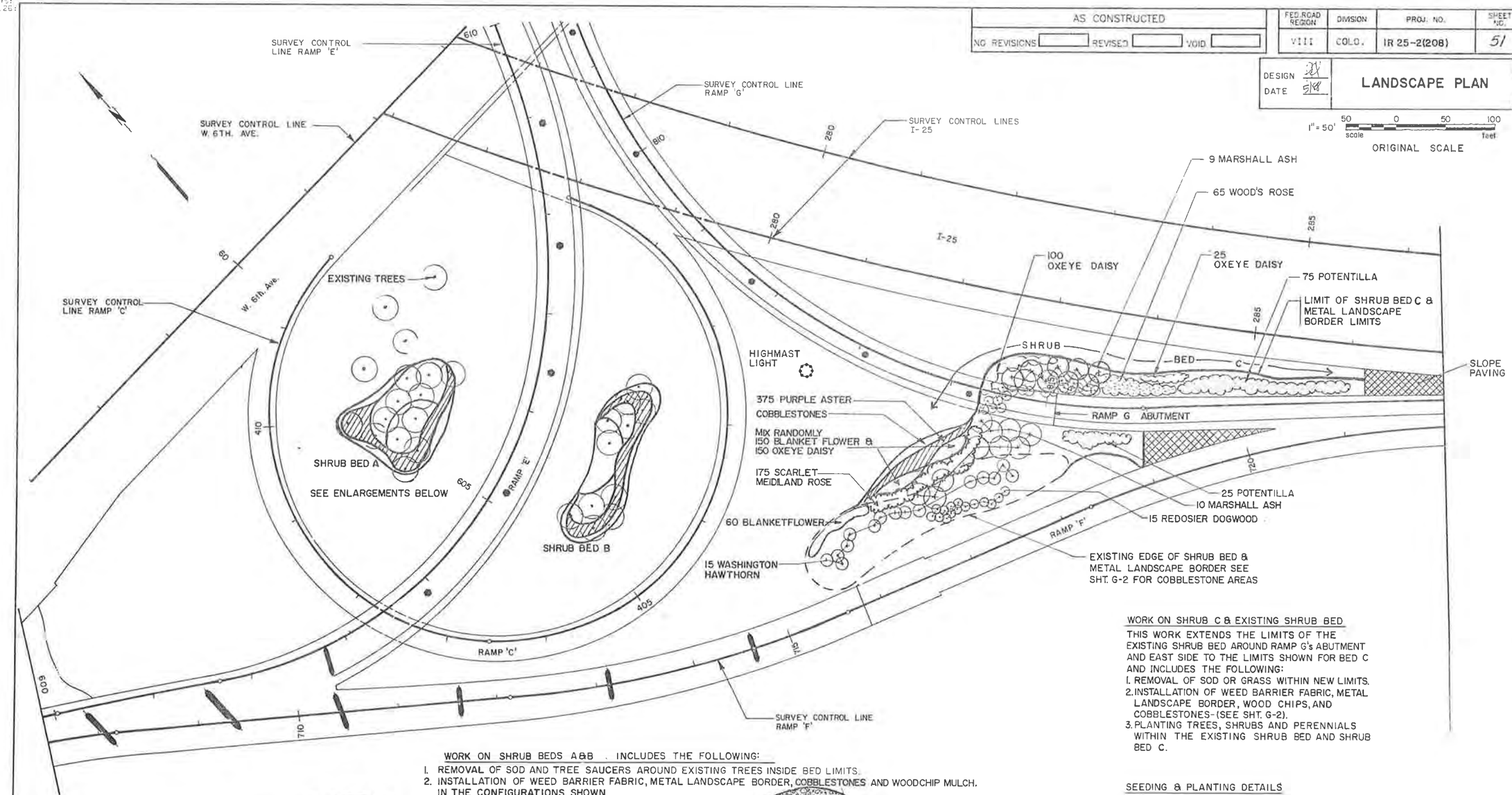

WORK ON SHRUB C & EXISTING SHRUB BED

THIS WORK EXTENDS THE LIMITS OF THE EXISTING SHRUB BED AROUND RAMP G's ABUTMENT AND EAST SIDE TO THE LIMITS SHOWN FOR BED C AND INCLUDES THE FOLLOWING:

1. REMOVAL OF SOD OR GRASS WITHIN NEW LIMITS.
2. INSTALLATION OF WEED BARRIER FABRIC, METAL LANDSCAPE BORDER, WOOD CHIPS, AND COBBLESTONES-(SEE SHT. G-2).
3. PLANTING TREES, SHRUBS AND PERENNIALS WITHIN THE EXISTING SHRUB BED AND SHRUB BED C.

SEEDING & PLANTING DETAILS

1. SEE GRADING PLANS FOR SEEDING LIMITS.
2. SEE SHT. L-1 FOR SEED MIX.
3. SEE SHT. L-3 FOR SHRUB BED DETAILS AND M-214-1 STANDARD FOR PLANTING DETAILS.

WORK ON SHRUB BEDS A & B . INCLUDES THE FOLLOWING:

1. REMOVAL OF SOD AND TREE SAUCERS AROUND EXISTING TREES INSIDE BED LIMITS.
2. INSTALLATION OF WEED BARRIER FABRIC, METAL LANDSCAPE BORDER, COBBLESTONES AND WOODCHIP MULCH. IN THE CONFIGURATIONS SHOWN.
3. PLANTING PERENNIALS WITHIN THE WOOD CHIP MULCH.

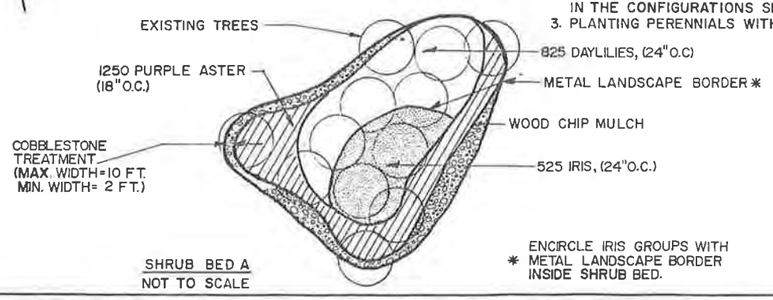

SHRUB BED A
NOT TO SCALE

* ENCIRCLE IRIS GROUPS WITH METAL LANDSCAPE BORDER INSIDE SHRUB BED.

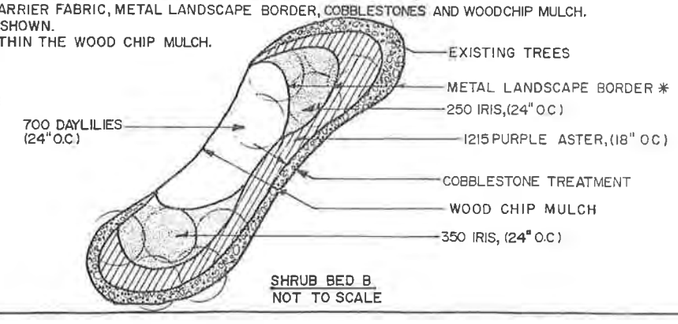

SHRUB BED B
NOT TO SCALE

STATE OF COLORADO
STATE DEPARTMENT OF HIGHWAYS
DIVISION OF HIGHWAYS
FORM NO. 126
REV. FEB. 1984

AS CONSTRUCTED			
NO REVISIONS	REVISED	VOID	

FED.ROAD REGION	DIVISION	PROJ. NO.	SHEET NO.	SHEET TOTALS
VIII	COLO.	IR 25-2(208)	52	

DESIGN / DATE	LANDSCAPE PLAN	L-3

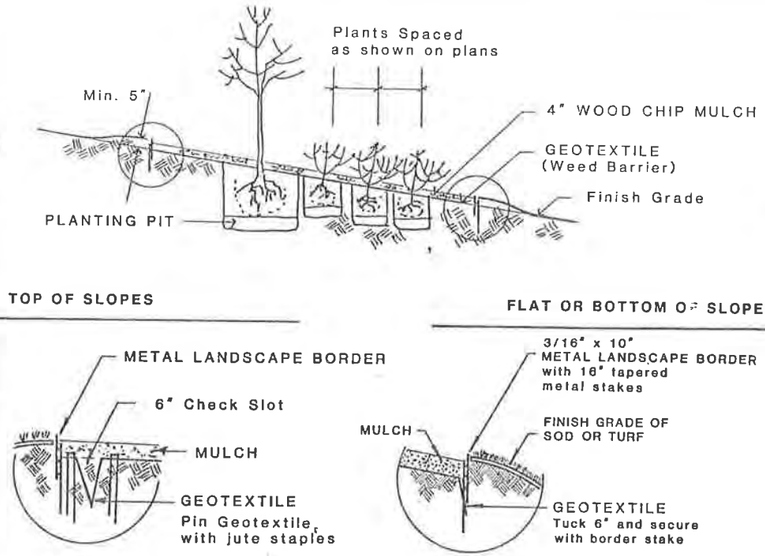

1 SHRUB BED DETAIL

NO SCALE

NOTES:

1. Geotextile (Weed Barrier) to meet Special Provisions to Section 420 and 712.
2. For Planting Pits see M-214-1.

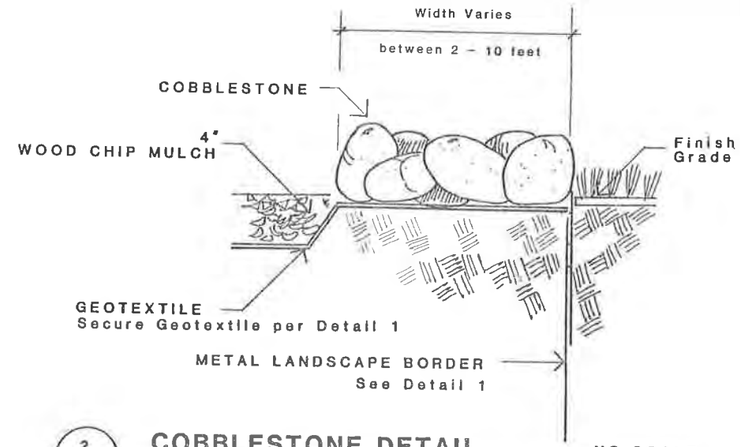

2 COBBLESTONE DETAIL

NO SCALE

NOTES

1. Cobblestone to meet Special Provisions of Section 610 Median Cover Material (Stone)
2. When placing Cobblestone in existing shrub beds with wood chip mulch, remove mulch from stone areas and evenly distribute excess mulch within the bed.

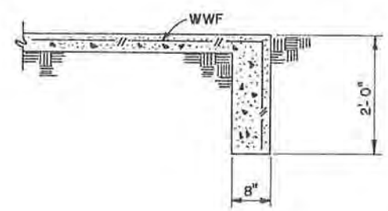

SECTION THRU CUT OFF WALL

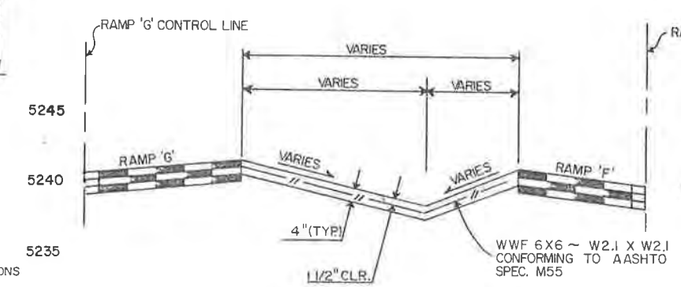

TYPICAL SECTION THRU SLOPE PAVING

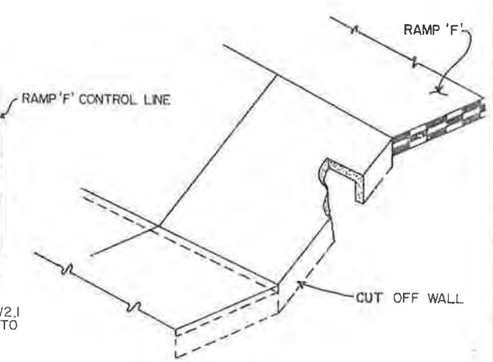

NOTES:

SLOPE PAVING SHALL BE POURED IN 10-FT. TRANSVERSE SECTIONS WITH A TOOLED CONSTRUCTION JOINT AT EACH SECTION.

WIRE FABRIC SHALL BE 2" FROM THE END OF JOINTS AND SHALL LAP 8" AT SPLICES.

WELDED WIRE FABRIC SHALL NOT BE PAID FOR SEPARATELY, BUT SHALL BE INCLUDED IN THE WORK.

ALL SLOPE PAVING TO RECEIVE A LIGHT SAND BLAST FINISH (CLASS I) AND LIGHT COLOR COATING AS SPECIFIED FOR THE RETAINING WALLS.

31 CU. YDS. CONCRETE SLOPE AND DITCH PAVING ESTIMATED.

3 SLOPE PAVING DETAILS

NO SCALE

SUMMARY OF IRRIGATION QUANTITIES

AS CONSTRUCTED		
NO REVISIONS ☐	REVISED ☐	VOID ☐

FED. ROAD REGION	DIVISION	PROJ. NO.	SHEET NO.	SHEET TOTALS
VIII	COLO.	IR25-2(208)	53	

DESIGN AG
DATE 5/88

IRRIGATION SUMMARY

I-1

SPRINKLERS

Symbol	Size	Item No.	Description	Unit	Riser	Pattern	GPM	Pressure LBS	Spacing FEET	Radius FEET	Project Quantity	Remarks
○	1 inch	623	Pop-up Rotary Sprinkler	Each	Plastic	360°	13.5	50	55	55	3	TORO 644-02-42
◒	1 inch	623	Pop-up Rotary Sprinkler	Each	Plastic	180°	13.5	50	55	55	1	TORO 642-02-42
◕	1 inch	623	Pop-up Rotary Sprinkler	Each	Plastic	90°	6.7	50	50	50	1	TORO 641-02-40
●	1 inch	623	Pop-up Rotary Sprinkler	Each	Plastic	45°	6.7	50	50	50	1	TORO 640-02-40
△	1 inch	623	Shrubbery Spray & Flood Irrigator	Each	Plastic	360°	4.8	50	30	30	17	TORO XP-300S-F-5.0

PIPE

Symbol	Size	Item No.	Description	Unit	Remarks	Project Quantity
——	3 inch	619	Plastic Pipe (PVC)	Lin. Ft.	Class 200	200
——	2 inch	619	Plastic Pipe (PE)	Lin. Ft.		55
——	1.5 inch	619	Plastic Pipe (PE)	Lin. Ft.		150
——	1 inch	619	Plastic Pipe (PE)	Lin. Ft.		815

VALVES

Symbol	Size	Item No.	Description	Unit	Remarks	Project Quantity
▶◀	2 inch	623	Automatic Control Valve	Each		1
	#14	623	Control Wire (24 Volt)	Lin. Ft.		410

MISCELLANEOUS ITEMS

Symbol	Size	Item No.	Description	Unit	Remarks	Project Quantity

GENERAL NOTES

1. The Contractor will not interrupt sprinkler system service to the NE, NW, SE, or SW quadrants of the Interchange between April and October (inclusive).
2. The Contractor will be responsible for the immediate repair and maintenance of broken or damaged lines that irrigate the NE, NW, SE, or SW quadrants.
3. New or relocated valves, thrust blocks, etc., shall conform to the latest revision of the 'Denver Water Department Engineering Standards.'
4. Sprinkler system installation shall be coordinated with all other utility, lighting, and planting installation. Irrigation lines and heads shall be adjusted around piers, footings, or trees to maximize coverage.
5. The Contractor shall salvage and reset: one, 2-inch automatic control valve; two, 360° pop-up rotary sprinkler heads; and two, 180° pop-up rotary sprinkler heads. This work shall be paid for by Force Account.

INITIAL	DATE	CHECKED BY
		QUANTITIES BY
		CHECKED BY

DESIGNED BY	CHECKED BY	DETAILED BY

UDAHPLUS:IRLUA.MC
DATE 18-MAR-1988 - TIME 09:38

STATE OF COLORADO
STATE DEPARTMENT OF HIGHWAYS
DIVISION OF HIGHWAYS:
H. O. H. FORM NO.126:
REV. FEB. 1984

AS CONSTRUCTED		
NO REVISIONS	REVISED	VOID

FED. ROAD REGION	DIVISION	PROJ. NO.	SHEET NO.	SHEET TOTALS
VIII	COLO.	IR 25-2(208)	54	

DESIGN
DATE

IRRIGATION PLAN

I-2

1" = 50' scale (50 0 50 100 feet)

ORIGINAL SCALE

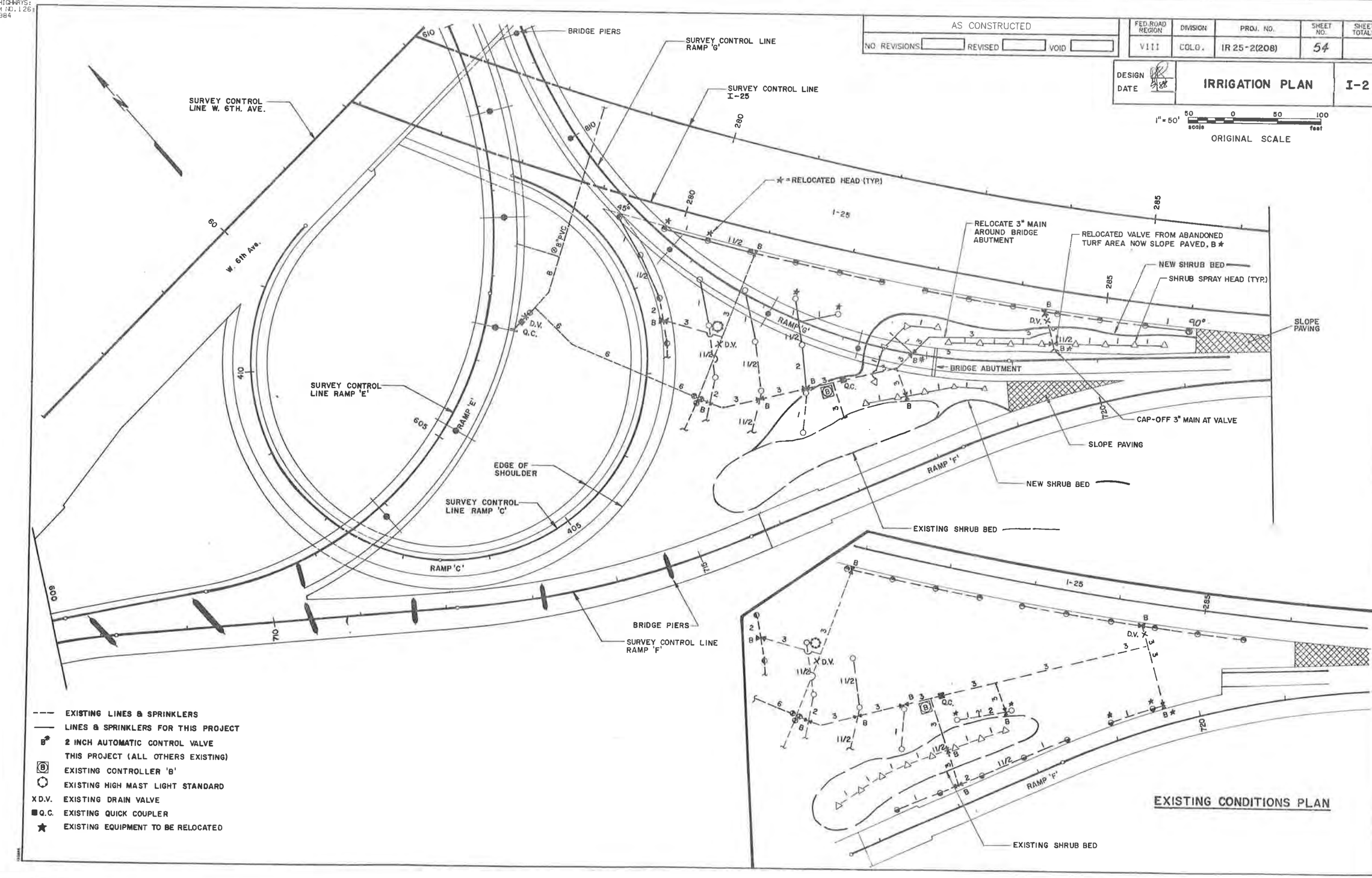

AS CONSTRUCTED						
NO REVISIONS	REVISED	VOID	FED ROAD REGION	DIVISION	PROJ NO.	SHEET NO.	SHEET TOTALS
			VIII	COLO.	IR 25-2(208)	55	

DESIGN D.S.
DATE 10/95

IRRIGATION DETAILS

I-3

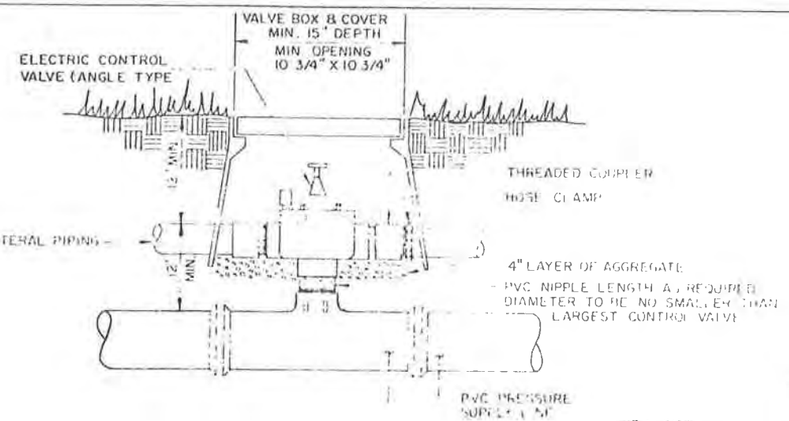

DETAIL OF VALVE & VALVE BOX

VALVE BOX, HOSE CLAMPS, AGGREGATE, AND NIPPLES TO BE SUBSIDIARY TO AUTOMATIC CONTROL VALVE ITEM

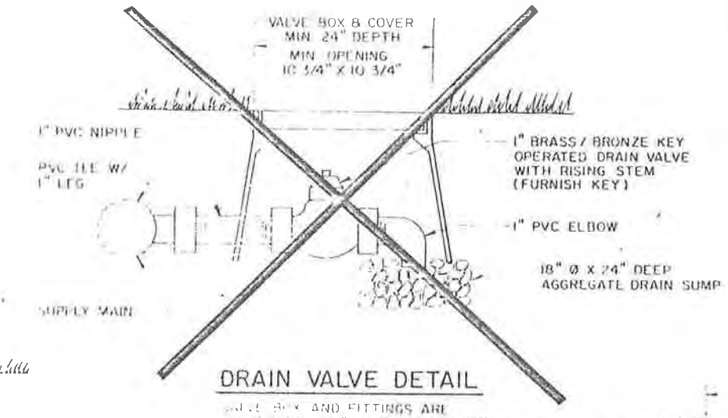

DRAIN VALVE DETAIL

VALVE BOX AND FITTINGS ARE SUBSIDIARY TO 12" DRAIN VALVE ITEM

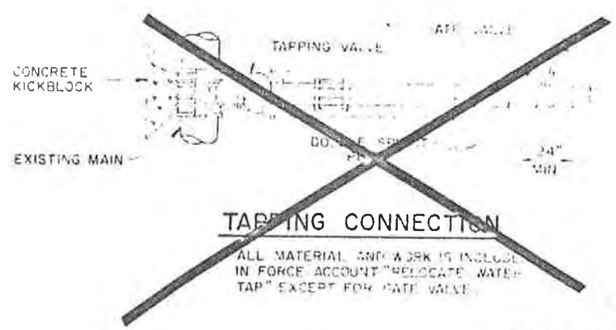

TAPPING CONNECTION

ALL MATERIAL AND WORK IS INCLUDED IN FORCE ACCOUNT "RELOCATE WATER TAP" EXCEPT FOR GATE VALVE

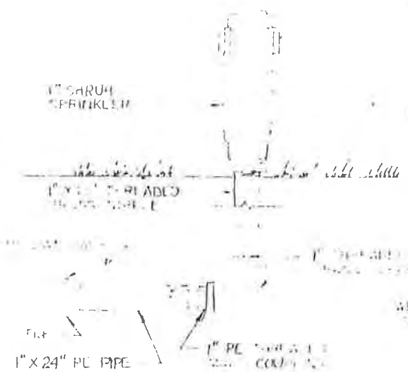

TYPICAL SHRUB HEAD INSTALLATION

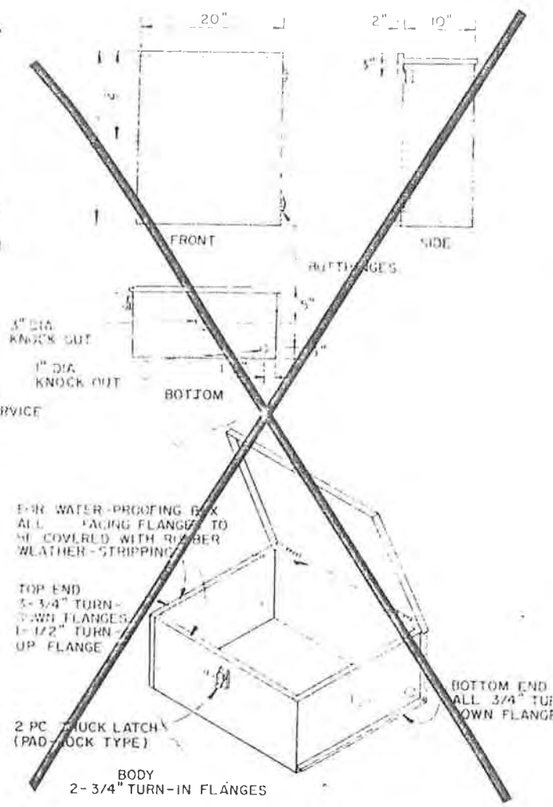

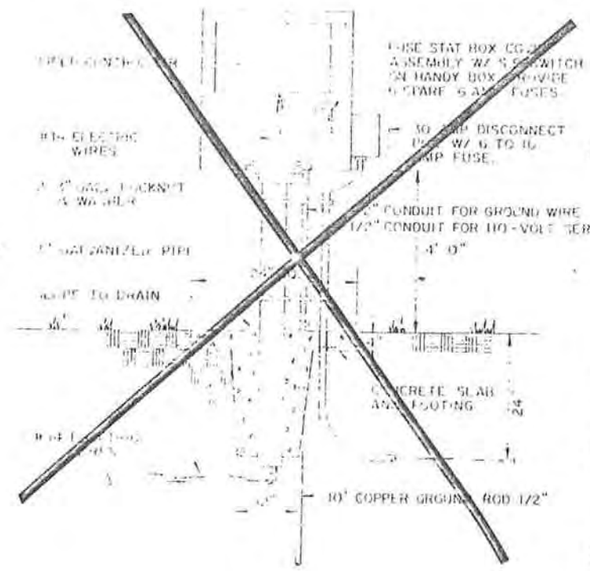

PIPE MOUNTED CONTROLLER DETAIL

ALL MATERIAL IS INCLUDED UNDER AUTOMATIC CONTROLLER PAY ITEM.

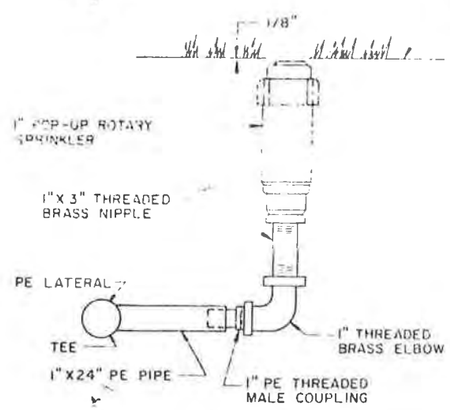

TYPICAL POP-UP HEAD INSTALLATION

ALL FITTINGS ARE INCLUDED IN POP-UP HEAD PAY ITEM.

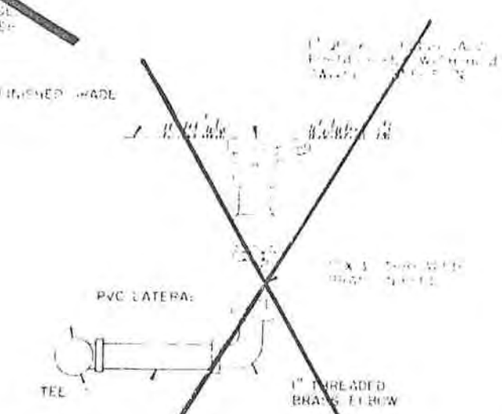

TYPICAL QUICK COUPLER INSTALLATION

ALL FITTINGS ARE INCLUDED IN QUICK COUPLER PAY ITEM.

WEATHER-PROOF, VANDAL-PROOF, SPRINKLER CONTROLLER BOX

ALL MATERIAL IS INCLUDED UNDER AUTOMATIC CONTROLLER PAY ITEM.

STATE OF COLORADO
STATE DEPARTMENT OF HIGHWAYS
DIVISION OF HIGHWAYS
D. O. H. FORM NO. 126
REV. FEB. 1984

AS CONSTRUCTED				FED. ROAD REGION	DIVISION	PROJ. NO.	SHEET NO.	SHEET TOTALS
NO REVISIONS	REVISED	VOID		VIII	COLO.	IR25-2(208)	56	

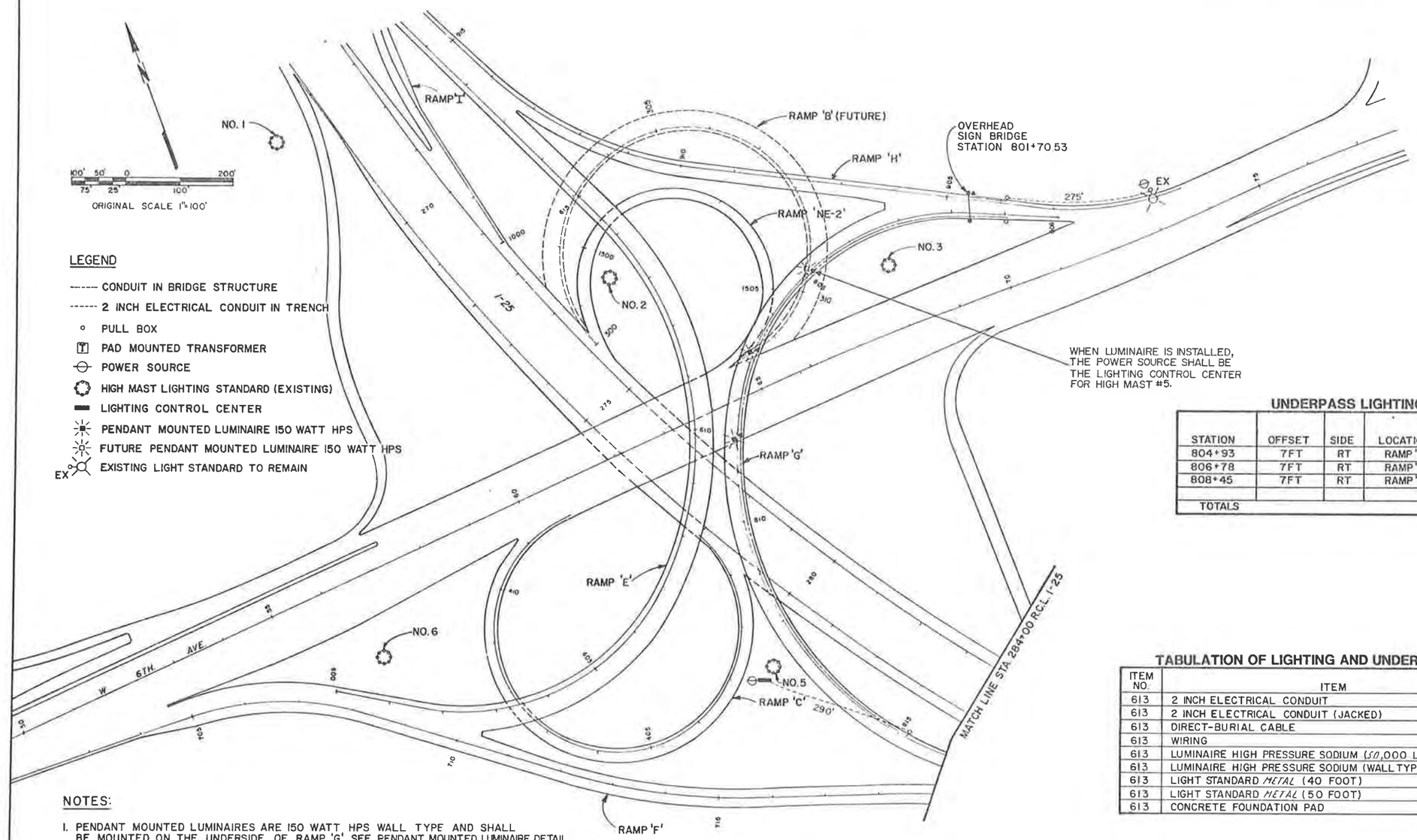

LEGEND

- CONDUIT IN BRIDGE STRUCTURE
- 2 INCH ELECTRICAL CONDUIT IN TRENCH
- PULL BOX
- PAD MOUNTED TRANSFORMER
- POWER SOURCE
- HIGH MAST LIGHTING STANDARD (EXISTING)
- LIGHTING CONTROL CENTER
- PENDANT MOUNTED LUMINAIRE 150 WATT HPS
- FUTURE PENDANT MOUNTED LUMINAIRE 150 WATT HPS
- EX EXISTING LIGHT STANDARD TO REMAIN

UNDERPASS LIGHTING

STATION	OFFSET	SIDE	LOCATION	2 INCH ELECTRICAL CONDUIT	PENDANT MOUNTED 150 W HPS
804+93	7FT	RT	RAMP 'G'	275 LIN.FT.	(FUTURE)
806+78	7FT	RT	RAMP 'G'		1
808+45	7FT	RT	RAMP 'G'	290 LIN.FT.	1
TOTALS				565 LIN.FT.	2

TABULATION OF LIGHTING AND UNDERPASS LIGHTING QUANTITIES

ITEM NO.	ITEM	UNIT	TOTALS
613	2 INCH ELECTRICAL CONDUIT	LIN. FT.	635
613	2 INCH ELECTRICAL CONDUIT (JACKED)	LIN.FT.	80
613	DIRECT-BURIAL CABLE	LIN.FT.	4495
613	WIRING	L.S.	1
613	LUMINAIRE HIGH PRESSURE SODIUM (50,000 LUMEN)	EACH	16
613	LUMINAIRE HIGH PRESSURE SODIUM (WALL TYPE) (16,000 LUMEN)	EACH	2
613	LIGHT STANDARD METAL (40 FOOT)	EACH	15
613	LIGHT STANDARD METAL (50 FOOT)	EACH	1
613	CONCRETE FOUNDATION PAD	EACH	16

NOTES:

1. PENDANT MOUNTED LUMINAIRES ARE 150 WATT HPS WALL TYPE AND SHALL BE MOUNTED ON THE UNDERSIDE OF RAMP 'G'. SEE PENDANT MOUNTED LUMINAIRE DETAIL.
2. ALL LUMINAIRES SHALL BE MOUNTED AS RECOMMENDED BY THE MANUFACTURER AND THE COLORADO DEPARTMENT OF HIGHWAYS.
3. ● FUTURE PENDANT MOUNTED LUMINAIRE IS TO BE INSTALLED WHEN RAMP 'B' (FUTURE) IS CONSTRUCTED.
4. ▲ CONNECT TO CONDUIT IN BRIDGE STRUCTURE.

UNDERPASS LIGHTING PLAN

STATE OF COLORADO
STATE DEPARTMENT OF HIGHWAYS
DIVISION OF HIGHWAYS:
D. O. H. FORM NO. 126:
REV. FEB. 1984

AS CONSTRUCTED			
NO REVISIONS ☐	REVISED ☐	VOID ☐	

FED.ROAD REGION	DIVISION	PROJ. NO.	SHEET NO.	SHEET TOTALS
VIII	COLO.	IR25-2(208)	57	

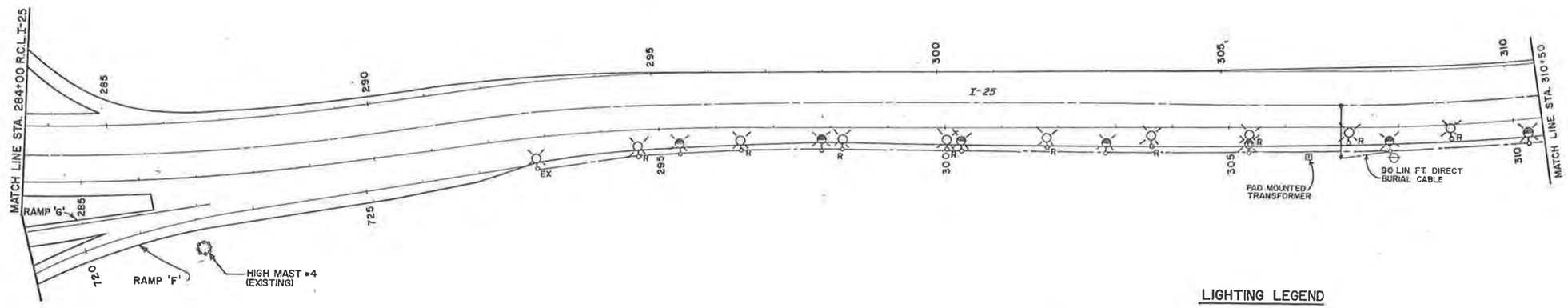

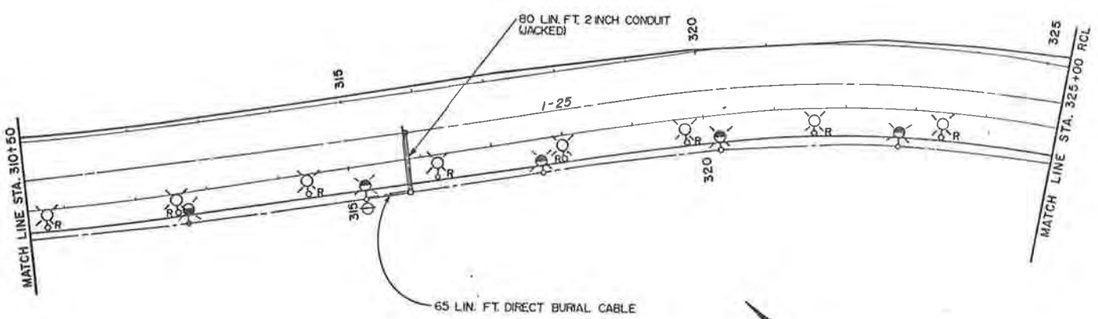

LIGHTING LEGEND

- EX — EXISTING TO REMAIN.
- ⚠1 R — EXISTING TO BE REMOVED.
- ⚠2 — 40' STEEL LIGHT STANDARD AND 400 W HPS LUMINAIRE.
- ⚠2 — 50' STEEL LIGHT STANDARD AND 400 W HPS LUMINAIRE.
- DIRECT BURIAL CABLE.
- 2 INCH ELECTRICAL CONDUIT.
- 2 INCH ELECTRICAL CONDUIT (JACKED).
- POWER SOURCE.
- PULL BOX.
- HIGH MAST LIGHTING STANDARD (EXISTING).
- T — PAD MOUNTED TRANSFORMER

NOTES:

⚠1 REMOVAL BY PSCO AT NO CHARGE TO THE PROJECT (TOTAL-23)

⚠2 LUMINAIRES ON LIGHT STANDARDS ARE 400 WATT HPS MEDIUM SEMI-CUTOFF WITH TYPE III DISTRIBUTION. (M-613-1)

3. ALL LUMINAIRES AND LIGHT STANDARDS SHALL BE MOUNTED AS RECOMMENDED BY THE MANUFACTURER AND THE COLORADO DEPARTMENT OF HIGHWAYS. (M-613-1)

100' 50' 0' 200'
75' 25' 100'

ORIGINAL SCALE 1"=100'

FINAL LIGHTING PLAN

ATE OF COLORADO
ATE DEPARTMENT OF HIGHWAYS
/ISION OF HIGHWAYS:
O. H. FORM NO. 126:
/. FEB. 1984

AS CONSTRUCTED						
NO REVISIONS		REVISED		VOID		

FED.ROAD REGION	DIVISION	PROJ. NO.	SHEET NO.	SHEET TOTALS
VIII	COLO.	IR25-2(208)	58	

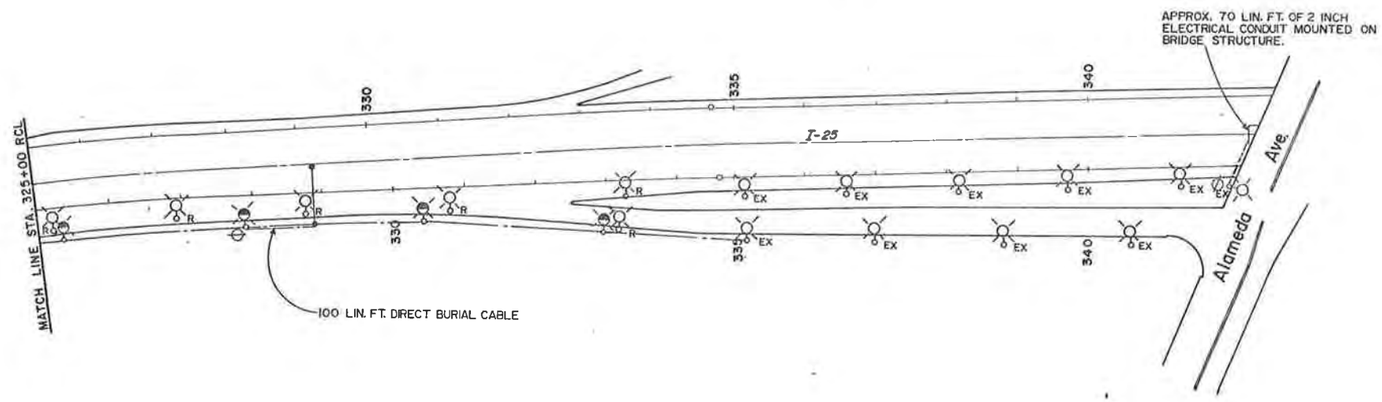

LIGHTING LEGEND

- EX — EXISTING TO REMAIN.
- △1 R — EXISTING TO BE REMOVED.
- △2 — 40' STEEL LIGHT STANDARD AND 400 W HPS LUMINAIRE
- HIGH MAST LIGHTING STANDARD (EXISTING).
- DIRECT BURIAL CABLE
- 2 INCH ELECTRICAL CONDUIT.
- 2 INCH ELECTRICAL CONDUIT (JACKED).
- POWER SOURCE.
- PULL BOX.
- T — PAD MOUNTED TRANSFORMER

NOTES:

△1 REMOVAL BY PSCO AT NO CHARGE TO THE PROJECT (TOTAL-23).

△2 LUMINAIRES ON LIGHT STANDARDS ARE 400 WATT HPS MEDIUM SEMI-CUTOFF WITH TYPE III DISTRIBUTION. (M-613-1)

3. ALL LUMINAIRES AND LIGHT STANDARDS SHALL BE MOUNTED AS RECOMMENDED BY THE MANUFACTURER AND THE COLORADO DEPARTMENT OF HIGHWAYS. (M-613-1)

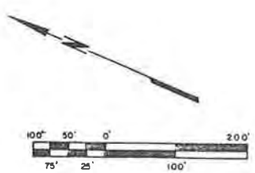

ORIGINAL SCALE 1" = 100'

FINAL LIGHTING PLAN

AS CONSTRUCTED	FED. ROAD REGION	DIVISION	PROJ. NO.	SHEET NO.
NO REVISIONS ____ REVISED ____ VOID ____	VIII	COLO.	IR25-2(208)	59

LIGHTING WIRING DESIGN

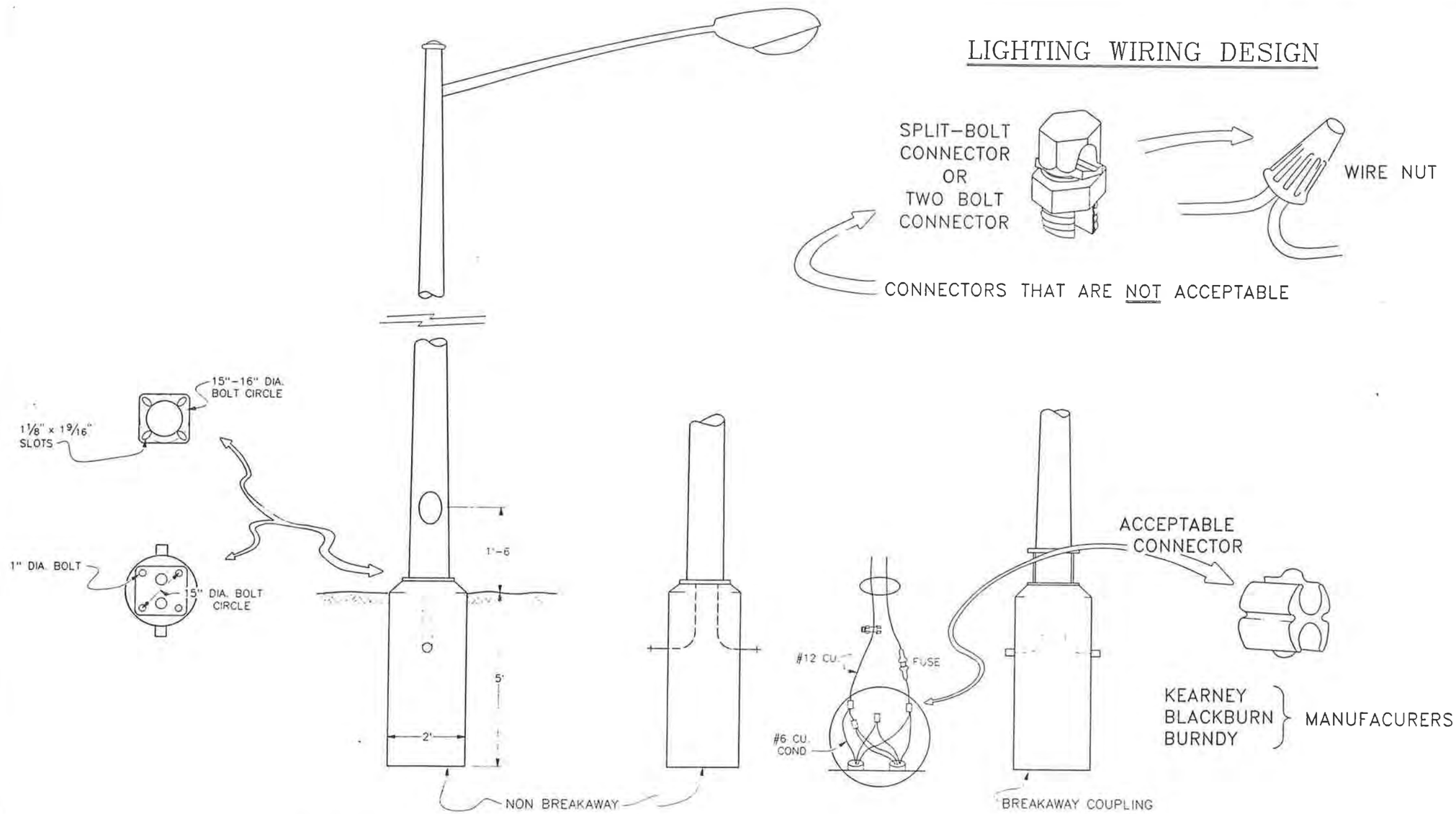

All wiring shall meet the requirements of the National Electrical Safety Code.

STATE OF COLORADO
STATE DEPARTMENT OF HIGHWAYS
DIVISION OF HIGHWAYS:
D. C. H. FORM NO. 126:
REV. FEB. 1964

AS CONSTRUCTED				FED. ROAD REGION	DIVISION	PROJ. NO.	SHEET NO.	SHEET TOTALS
NO REVISIONS	REVISED	VOID		VIII	COLO.	IR25-2(208)	60	

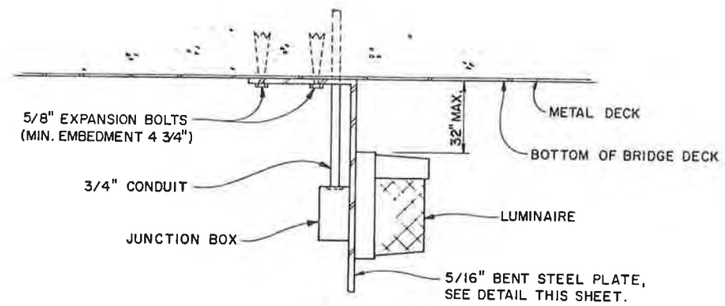

LUMINAIRE ATTACHMENT DETAIL

NOTE:
BOLT HOLES SHALL ALIGN WITH LOWER PORTION OF CORRUGATED METAL DECK.

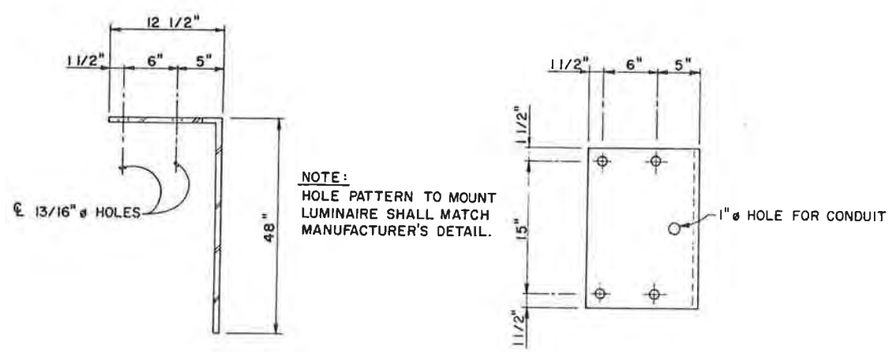

NOTE:
HOLE PATTERN TO MOUNT LUMINAIRE SHALL MATCH MANUFACTURER'S DETAIL.

STEEL PLATE DETAIL

PENDANT MOUNTED LUMINAIRE DETAIL

STATE OF COLORADO
STATE DEPARTMENT OF HIGHWAYS
DIVISION OF HIGHWAYS
O. D. H. FORM NO. 828
REV. FEB. 1984

AS CONSTRUCTED					
NO REVISIONS ☐	REVISED ☐	VOID ☐			
FED. ROAD REGION	DIVISION	PROJ. NO.	SHEET NO.	SHEET TOTALS	
VIII	COLO.	IR25-2(208)	61		

TABULATION OF SIGNING QUANTITIES

ITEM NO.	ITEM	UNIT			PROJECT TOTALS
202	REM DELINEATOR	EA			40
202	REM PAVEMENT MARKING	SQ FT			1,512
202	REM GROUND SIGN	EA			12
202	REM SIGN PANEL	EA			5
210	RES GROUND SIGN	EA			5
210	RES TRAFFIC COUNTER (PERMANENT)	EA			1
612	DELINEATOR (TY 1)	EA			29
612	DELINEATOR (TY 2)	EA			5
612	REFLECTOR (MEDIAN BARRIER)	EA			36
613	2 INCH ELECTRICAL CONDUIT	LIN FT			2,440
613	3 INCH ELECTRICAL CONDUIT	LIN FT			70
614	SIGN PANEL (CL I)	SQ FT			122
614	SIGN PANEL (CL II)	SQ FT			175
614	SIGN PANEL (CL III)	SQ FT			1,664
614	TIMBER SIGN POST (6 X 6)	LIN FT			112
614	STEEL SIGN POST (S3 X 5.7)	LIN FT			9
614	STEEL SIGN POST (S3 X 7.5)	LIN FT			9
614	CONCRETE FOOTING II-S (DRILLED)	EA			1
614	CONCRETE FOOTING III-S (DRILLED)	EA			2
614	CONCRETE FOOTING V-S (DRILLED)	EA			1
614	OVERPASS MOUNTED SIGN BRACKET	EA			1
614	SIGN BR STR (45 < 50)	EA			1
614	SIGN BR STR (80 < 85)	EA			1
614	SIGN BR STR (90 < 95)	EA			1
614	BALANCED BUTTERFLY STRUCTURE	EA			1
614	LOOP DECTECTOR WIRE	LIN FT			1,900
627	THERMOPLASTIC PVMT MKG	SQ FT			11,484
627	PLASTIC PVMT MKG (60 MILS)	SQ FT			1,764

SCHEDULE OF CONSTRUCTION TRAFFIC DEVICES

SIGNS						OTHER DEVICES	
SIGN CODE	LEGEND	DIMENSIONS	PANEL SIZE A	PANEL SIZE B	PANEL SIZE C	ITEM	QUANTITY
		SIGN TOTALS					

STATE OF COLORADO
STATE DEPARTMENT OF HIGHWAYS
DIVISION OF HIGHWAYS
D. G. H. FORM NO. 126
REV. FEB. 1964

AS CONSTRUCTED					
NO REVISIONS ☐ REVISED ☐ VOID ☐	FED. ROAD REGION	DIVISION	PROJ. NO.	SHEET NO.	SHEET TOTALS
	VIII	COLO.	IR 25-2(208)	62	

TABULATION OF DELINEATORS

STATIONS	SIDE	SPACING	TYPE I EACH		TYPE II EACH		TYPE III EACH		REFLECTOR (MEDIAN BARRIER) EACH	REMOVALS	REMARKS
WB 6TH AVE. to NB I-25	Rt/Lt	—								16	
6TH AVE											
64+30 WB	Rt	—	1Y								FIELD LOCATE TYPE I IN GORE
57+30 WB	Rt	—	1Y								FIELD LOCATE TYPE I IN GORE
69+00 EB	Rt	—	1Y								FIELD LOCATE TYPE I IN GORE
RAMP G											
803+18 to 807+66	Rt/Lt	56							9C 9Y		
808+36 to 814+66	Rt/Lt	70							9C 9Y		
815+36 to 816+06	Rt/Lt	70	2C 2Y								FIELD LOCATE TYPE I IN GORE
817+30	Lt	—	1C								
817+46	Lt	—	1Y								
I-25											
295+00 to 333+00	Rt	—								24	
295+00 to 304+60	Rt	528	3C								
307+00 to 312+10	Rt	170	4C								
315+10 to 317+50	Rt	240	2C								
318+70 to 327+10	Rt	120	8C								
328+75 to 332+75	Rt	100			5C						
332+50	Rt	—	1C								FIELD LOCATE TYPE I IN GORE
NW-1											
5+00 to 6+00	Rt	100	2C								
TOTALS			23C 6Y } 29		5C				18C 18Y } 36	40	

NOTE:
R=RED
C=CRYSTAL
Y=YELLOW

STATE OF COLORADO
STATE DEPARTMENT OF HIGHWAYS
DIVISION OF HIGHWAYS
D. O. H. FORM NO. 822
REV. FEB. 1984

TABULATION OF SIGNS

AS CONSTRUCTED		
NO REVISIONS ☐	REVISED ☐	VOID ☐

FED. ROAD REGION	DIVISION	PROJ. NO.	SHEET NO.	SHEET TOTALS
VIII	COLO.	IR25-2 (208)	63	

SIGN NO.	SIGN CODE	STATION	SIGN PANEL SIZE	BACK-GROUND COLOR	REMOVE GROUND SIGN (EACH)	RESET GROUND SIGN (EACH)	NO. OF POSTS	LENGTH OF POST	POST TYPE (LIN. FT.) 4 X 4 TIMBER	6 X 6 TIMBER	W6X12 BEAM	W6X15 BEAM	W8X18 BEAM	W8X21 BEAM	W10X22 BEAM	STEEL	S3X5.7 BEAM	S3X7.5 BEAM	U-2	CONC. FOOTING TYPE (EACH) 1	2	3	4	5	6	7	8	SIGN PANEL (SQ. FT.) CLASS I	CLASS II	CLASS III
1		57+65/6th Ave WB			1																									
2	48W4-3R	57+80/6th Ave WB	48"x48"	Yellow			1	18'-6"		18.5																			16.00	
3		58+50/6th Ave WB			1																									
4		Ramp WB 6th Ave to SB I-25			1																									
5		272+80/I-25 SB			1																									
6a	48R3-7aR	270+00/I-25 SB	48"x48"	White			1	19'-0"		19.0																			16.00	
6b	Special		48"x18"	White																									6.00	
7		269+50/I-25 SB			1																									
8	60R3-7aR	275+00/I-25 SB	60"x60"	White			1	18'-6"		18.5																			25.00	
9a	24M3-3a		24"x12" ●	Blue																									2.00	
9b	24M1-1(25)		24" Shield ●	Red/Blue																									4.00	
9c	21M6-2a(L)		21"x15" ●	Blue																									2.19	
9d	24M3-1a	906+10/Ramp 'H'	24"x12" ●	Blue			1	9'-0"									9.0 (Stub post in place)												2.00	
9e	24M1-1(25)		24" Shield ●	Red/Blue																									4.00	
9f	21M6-2a(R)		21"x15" ●	Blue																									2.19	
10		58+80/6th Ave WB			Remove	2 Sign	Panels																							
11		61+00/6th Ave WB			1																									
12	48W4-3R	66+00/6th Ave WB	48"x48"	Yellow			1	18'-6"		18.5																			16.00	
13	See Tabulation	of Overhead Signs																												
14	See Tabulation	of Overhead Signs			Remove	2 Sign	Panels																							
15	48W4-1L	816+50/Ramp 'G'	48"x48"	Yellow			1	18'-6"		18.5																			16.00	
16		721+40/Ramp 'F'			1																									
17		291+00/I-25 SB			1																									
18	48W4-3R	292+00/I-25 SB	48"x48"	Yellow			1	8'-6"										8.5 (Mount on existing concrete barrier)											16.00	
19		292+70/I-25 SB			1																									
20		302+00/I-25 SB				1																								
21		306+40/I-25 SB			1																									
22	See Tabulation	of Overhead Signs																												
23		312+00/I-25 SB				1																								
24	See Tabulation	of Overhead Signs																												
25		318+00/I-25 SB			1																									
26a	48R3-7aR	324+00/I-25 SB	48"x48"	White			1	19'-0"		19.0																			16.00	
26b	Special		48"x18"	White																									6.00	
27		329+30/I-25 SB			1																									
28		332+60/I-25 SB				1																								
29		333+10/I-25 SB				1																								
30	See Tabulation	of Overhead Signs																												
31	60R3-7aR	329+80/I-25 SB	60"x60"	White			Mount on Sign Bridge Post																						25.00	
32		334+30/I-25 SB				1																								
33	See Tabulation	of Overhead Signs																												
34		342+15/I-25 SB			Remove	1 Sign	Panel (Overpass Mounted)																							
		TOTALS			12	5				112							9.0	8.5											174.38	

NOTES:

1. Post lengths are approximate only. Exact lengths to be determined by the Engineer.
▲ 2. Reflective sheeting shall be high brightness encapsulated type. See Section 713 of the Standard Specifications.
●3. See Project Special Provision for sign painting.

UD1d: 2086SIGNLDGN41
UDA1:LPLOTS3SIGIA.PRF
DATE 9-MAY-1988 - TIME 17:26

STATE OF COLORADO
STATE DEPARTMENT OF HIGHWAYS
DIVISION OF HIGHWAYS
D. O. H. FORM NO. 1261
REV. FEB. 1984

AS CONSTRUCTED		
NO REVISIONS ☐	REVISED ☐	VOID ☐

FED. ROAD REGION	DIVISION	PROJ. NO.	SHEET NO.	SHEET TOTALS
VIII	COLO.	IR25-2(208)	64	

TABULATION OF OVERHEAD SIGNS

SIGN NO.	STATION	SIGN PANEL SIZE	BACK-GROUND COLOR	NO. OF POST	TYPE OF POST	STRUCTURE TYPE	FRAME SIZE	STRUCTURE NUMBER	SIGN PANEL CLASS I (SQ. FT.)	~~SIGN PANEL CLASS II (SQ. FT.)~~	SIGN PANEL CLASS III (SQ. FT.)	TYPE OF FOOTING	COMMENTS
13a	801+70.53	16'x8'	Green	2	II-S	Sign Bridge ●	47.613'Span	F-16-RJ			128 ●	——	Existing Footings
13b	Ramp G	15'x8'	Green								120 ●		
14a		——	Green										
14b	73+90	——	Green			Existing Sign Bridge	72'Span	F-16-PS				——	Existing Sign Support
14c	6th AveWB	16'x12'	Green								192		
14d		15'x12'	Green								180		
22a		12'x15'	Green								180		
22b	307+00	11'-8"x2'-6"	Yellow	2	III-S	Sign Bridge	92'Span	F-16-RL	29.17			III-S(Drilled)	
22c	I-25SB	12'x15'	Green								180		
22d		11'-8"x2'-6"	Yellow						29.17				
24	315+80/I-25SB	22'x7'	Green	1	II-S	Balanced Butterfly	22'-0"	F-16-RK			154	II-S(Drilled)	
30a		12'x15'	Green								180		
30b	328+90	11'-8"x2'-6"	Yellow	2	V-S	Sign Bridge	81'Span	F-16-RM	29.17			V-S(Drilled)	Existing Left Footing
30c	I-25SB	14'x15'	Green								210		In I-25 Median
30d		13'-8"x2'-6"	Yellow						34.17				
33	342+30/I-25SB	20'x7'	Green			Overpass Bracket					140		
						TOTAL PANEL FOR OVERHEAD SIGNS			121.68		1664		

NOTES FOR OVERHEAD SIGNS

1. PANELS FOR OVERHEAD SIGNS SHALL BE SHEET ALUMINUM. SEE "CLASS III SIGNS, SHEETS 1 AND 2" INCLUDED IN THE PLANS FOR PANEL AND BACKING ZEE REQUIREMENTS. SEE DEPARTMENT STANDARD "CLASS I GROUND SIGN INSTALLATIONS" FOR CLASS I PANEL REQUIREMENTS, MINUMUM THICKNESS IS REDUCED TO 0.080".
2. CLASS III AND CLASS I PANELS SHALL HAVE A SMOOTH SURFACE TYPE REFLECTIVE SHEETING BACKGROUND.
3. LEGEND AND BORDER FOR GREEN BACKGROUND SIGNS SHALL BE SYSTEM 1 OR SYSTEM 2 AND FOR YELLOW BACKGROUND SIGNS SHALL BE SYSTEM 4. SEE SECTION 713 OF THE STANDARD SPECIFICATIONS.
4. OVERHEAD SIGNS SHALL HAVE THE STRUCTURE NUMBER STENCILED ON THE POST IN ACCORDANCE WITH DEPARTMENT STANDARD "STRUCTURE NUMBER INSTALLATION".

●5. SEE PROJECT SPECIAL PROVISION FOR SIGN PAINTING AND SIGN BRIDGE PAINTING.

UD1:1u08.3128BSIGN.DGN:1
UDA1:(PLOTS)SIG2A.PRF
DATE 9-MAY-1988 - TIME 17:30

STATE OF COLORADO
STATE DEPARTMENT OF HIGHWAYS
DIVISION OF HIGHWAYS
D. O. H. FORM NO. 1261
REV. FEB. 1984

TABULATION OF PAVEMENT MARKINGS

AS CONSTRUCTED					
NO REVISIONS ☐	REVISED ☐	VOID ☐			
FED. ROAD REGION	DIVISION	PROJ. NO.	SHEET NO.	SHEET TOTALS	
VIII	COLO.	IR25-2(208)	65		

	STATION	LOCATION	PAVEMENT MARKING LINES (Linear Feet)										
			EDGE		LANE	CENTER		CHANNELIZING		CROSSHATCH		CROSS-WALK	STOP
			WHITE SOLID 4 INCH	YELLOW SOLID 4 INCH	WHITE BROKEN 4 INCH	YELLOW SOLID 4 INCH	YELLOW BROKEN 4 INCH	WHITE SOLID 8 INCH	YELLOW SOLID 8 INCH	WHITE SOLID 8 INCH	YELLOW SOLID 8 INCH	WHITE SOLID 12 INCH	WHITE SOLID 24 INCH
■	50+20 TO 78+85	6th Ave EB	2,865	2,865									
▲	50+20 TO 78+85	6th Ave EB			1,440								
▲	50+20 TO 55+70	6th Ave EB			140								
■	50+20 TO 52+85	6th Ave EB						265					
■	59+60 TO 60+40	6th Ave EB						80					
▲	60+70 TO 66+00	6th Ave EB			140								
■	69+10 TO 70+60	6th Ave EB						150					
▲	70+90 TO 72+20	6th Ave EB			40								
▲	73+50 TO 74+80	6th Ave EB			40								
■	75+10 TO 77+10	6th Ave EB						400					
■	70+50 TO 52+50	6th Ave WB	1,800	1,800									
▲	70+50 TO 52+50	6th Ave WB			900								
▲	70+50 TO 67+80	6th Ave WB			70								
■	64+20 TO 63+40	6th Ave WB						80					
▲	63+10 TO 61+80	6th Ave WB			40								
▲	60+50 TO 59+20	6th Ave WB			40								
■	58+90 TO 57+30	6th Ave WB						320					
■	57+30 TO 56+50	6th Ave WB						80					
▲	56+20 TO 52+50	6th Ave WB			100								
■	53+85 TO 52+50	6th Ave WB						270					
■	284+70 TO 270+90	I-25 NB	1,380	1,380									
▲	284+70 TO 270+90	I-25 NB			1,050								
▲	284+70 TO 278+30	I-25 NB			160								
■	278+00 TO 273+70	I-25 NB						430					
■	274+70 TO 273+70	I-25 NB						100					
■	269+90 TO 284+50	I-25 SB	1,460	1,460									
▲	269+90 TO 284+50	I-25 SB			1,110								
▲	274+30 TO 274+80	I-25 SB			20								
■	275+10 TO 279+20	I-25 SB						410					
■	278+50 TO 279+20	I-25 SB						70					
■	284+50 TO 292+00	I-25 SB	750										
■	800+00 TO 819+00	Ramp G		1,900									
■	802+10 TO 803+40	Ramp G						260					
■	803+40 TO 817+20	Ramp G	1,380										
■	817+20 TO 819+25	Ramp G						410					
■	719+30 TO 720+20	Ramp F		90									
■	719+30 TO 728+00	Ramp F	870										
■	722+00 TO 727+50	Ramp F		550									
■	292+30 TO 297+90	I-25 SB						560					
■	298+20 TO 328+60	I-25 SB			770								
■	292+80 TO 334+40	I-25 SB	4,160										
■	328+90 TO 332+65	I-25 SB						375					
■	330+40 TO 332+65	I-25 SB						225					
	TOTAL	Thermoplastic	14,665	10,045	770	—	—	4,485					
	TOTAL	Plastic Pvmt.Mkg.(60 Mils)	—	—	5,290	—	—	—					
	GRAND TOTAL		14,665	10,045	6,060	—	—	4,485					

	STATION	LOCATION	PAVEMENT MARKING LINES (Linear Feet)										
			EDGE		LANE	CENTER		CHANNELIZING		CROSSHATCH		CROSS-WALK	STOP
			WHITE SOLID 4 INCH	YELLOW SOLID 4 INCH	WHITE BROKEN 4 INCH	YELLOW SOLID 4 INCH	YELLOW BROKEN 4 INCH	WHITE SOLID 8 INCH	YELLOW SOLID 8 INCH	WHITE SOLID 8 INCH	YELLOW SOLID 8 INCH	WHITE SOLID 12 INCH	WHITE SOLID 24 INCH

NOTE:
FOR DETAILS OF PAVEMENT MARKING LINES AND LINE PLACEMENT, SEE STANDARD S-627-1

LEGEND:
■ THERMOPLASTIC PAVEMENT MARKING
▲ PLASTIC PAVEMENT MARKING (60 MILS)

TOTAL SUMMARY OF ALL PAVEMENT MARKING QUANTITIES

COLOR	PAINT (GAL.)	THERMOPLASTIC (SQ. FT.)	PLASTIC PVMT. MKG. (60 MILS.) (SQ. FT.)	PLASTIC PVMT. MKG. (90 MILS.) (SQ. FT.)
YELLOW	—	3,349	—	—
WHITE	—	8,135	1,764	—
TOTAL	—	11,484	1,764	—

UD:\DGN\3208S1DN.DGN:1
UDAT:\PLOTS\SIGN2.PRF
DATE 6-MAY-1988 - TIME 08:27

STATE OF COLORADO
STATE DEPARTMENT OF HIGHWAYS
DIVISION OF HIGHWAYS:
D. O. H. FORM NO. 126:
REV. FEB. 1984

AS CONSTRUCTED		
NO REVISIONS	REVISED	VOID

FED. ROAD REGION	DIVISION	PROJ. NO.	SHEET NO.	SHEET TOTALS
VIII	COLO.	IR25-2(208)	66	

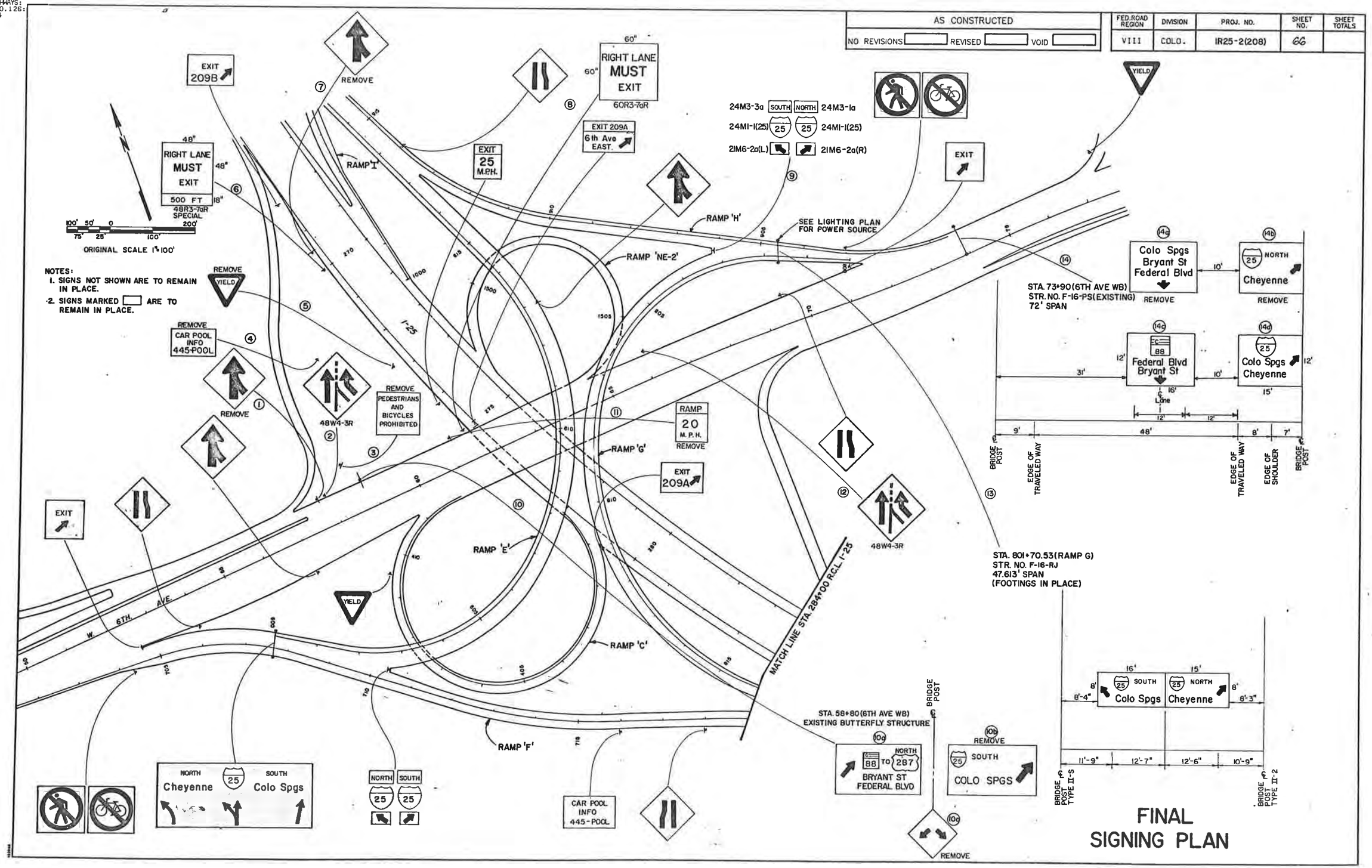

FINAL SIGNING PLAN

STATE OF COLORADO
STATE DEPARTMENT OF HIGHWAYS
DIVISION OF HIGHWAYS
D. O. H. FORM NO. 126
REV. FEB. 1984

AS CONSTRUCTED						
NO REVISIONS		REVISED		VOID		

FED. ROAD REGION	DIVISION	PROJ. NO.	SHEET NO.	SHEET TOTALS
VIII	COLO.	IR25-2(208)	67	

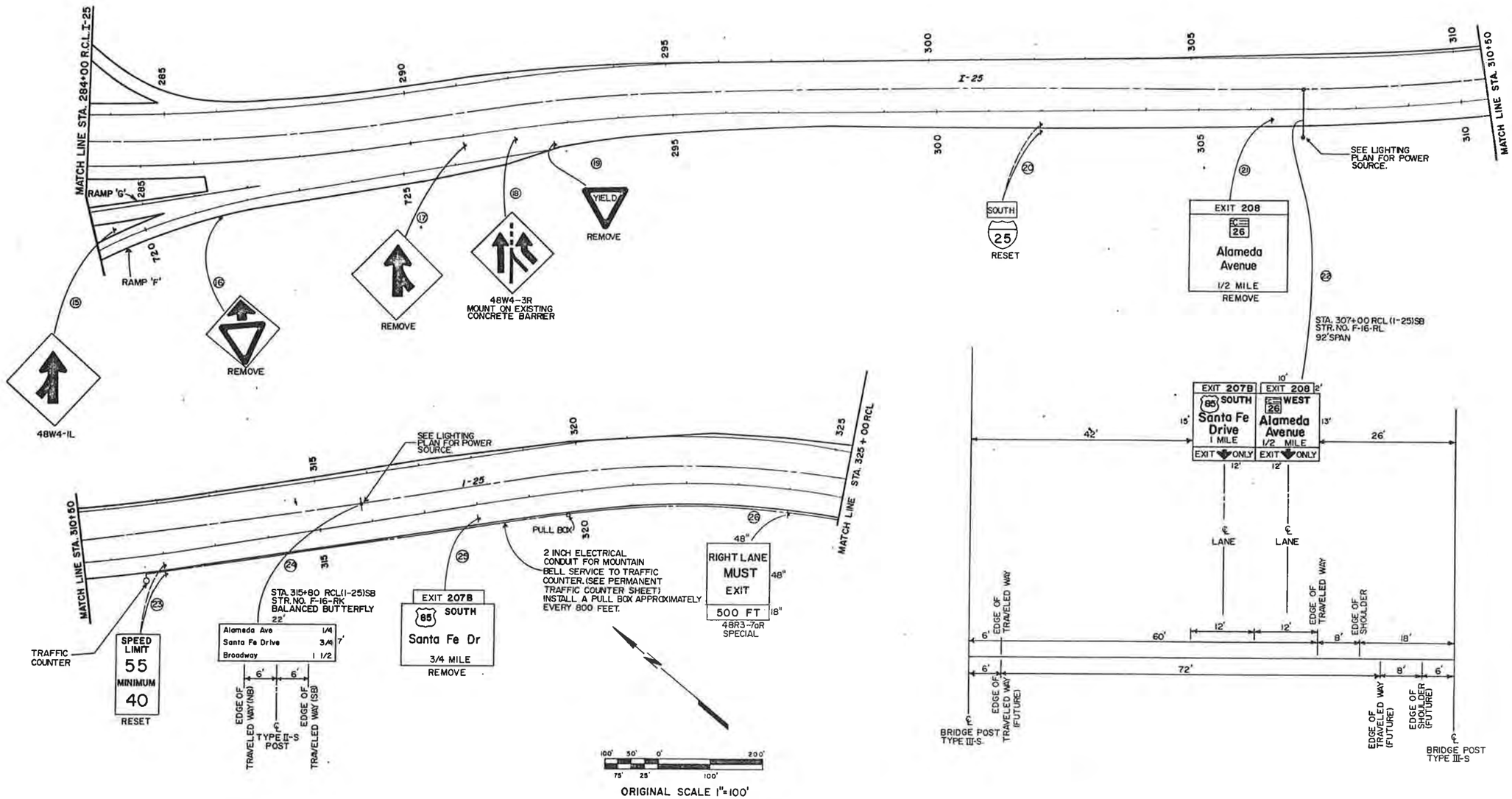

NOTE:

ALL SIGNS NOT SHOWN ARE TO REMAIN IN PLACE.

FINAL SIGNING PLAN

STATE OF COLORADO
STATE DEPARTMENT OF HIGHWAYS
DIVISION OF HIGHWAYS:
D. O. H. FORM NO. 126:
REV. FEB. 1984

AS CONSTRUCTED							
NO REVISIONS		REVISED		VOID			
FED. ROAD REGION	DIVISION	PROJ. NO.	SHEET NO.	SHEET TOTALS			
VIII	COLO.	IR25-2(208)	68				

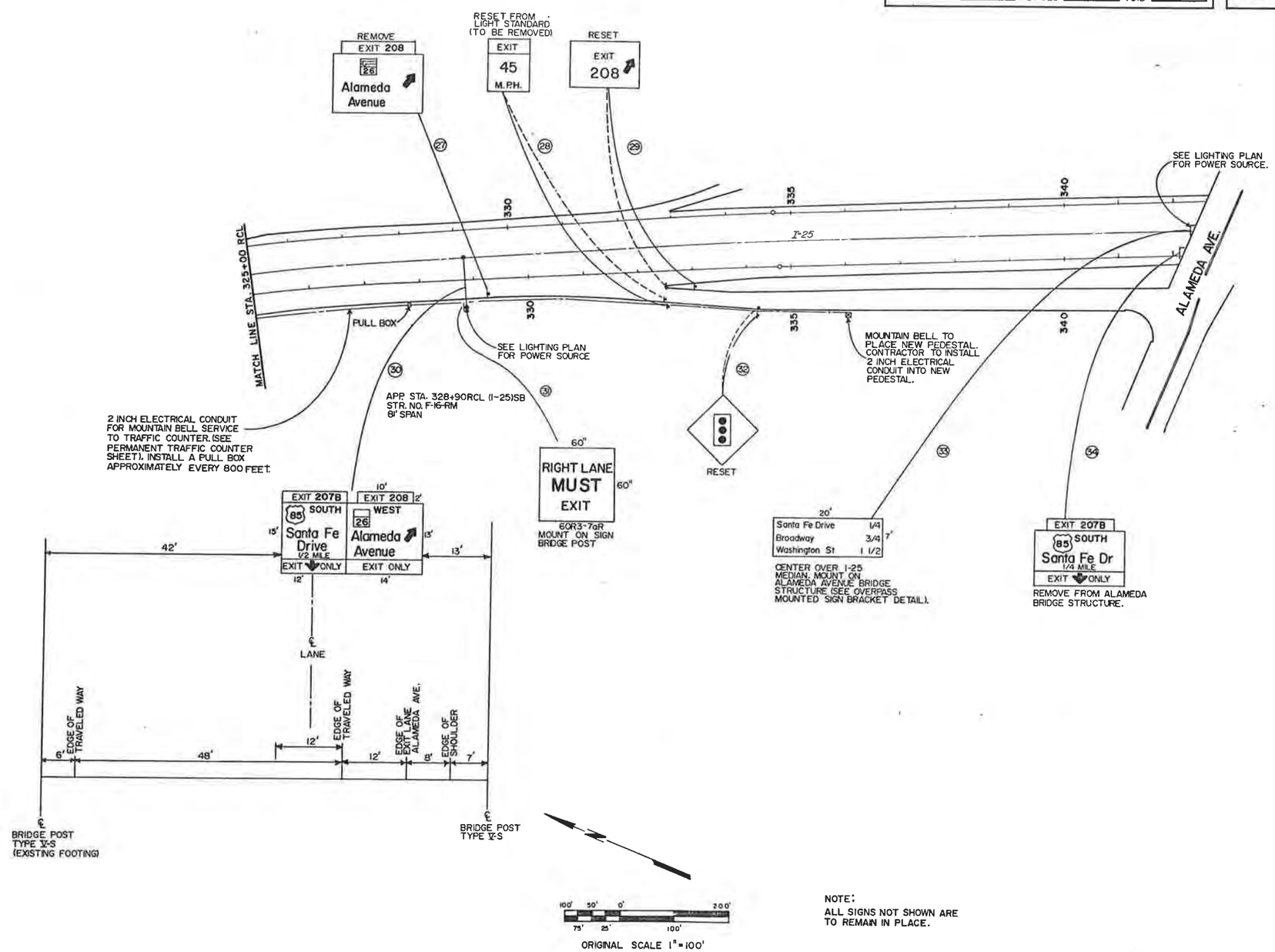

NOTE:
ALL SIGNS NOT SHOWN ARE TO REMAIN IN PLACE.

FINAL SIGNING PLAN

STATE OF COLORADO
STATE DEPARTMENT OF HIGHWAYS
DIVISION OF HIGHWAYS
D. O. H. FORM NO. 1265
REV. FEB. 1984

AS CONSTRUCTED			
NO REVISIONS	REVISED	VOID	

FED. ROAD REGION	DIVISION	PROJ. NO.	SHEET NO.	SHEET TOTALS
VIII	COLO.	IR25-2(208)	69	

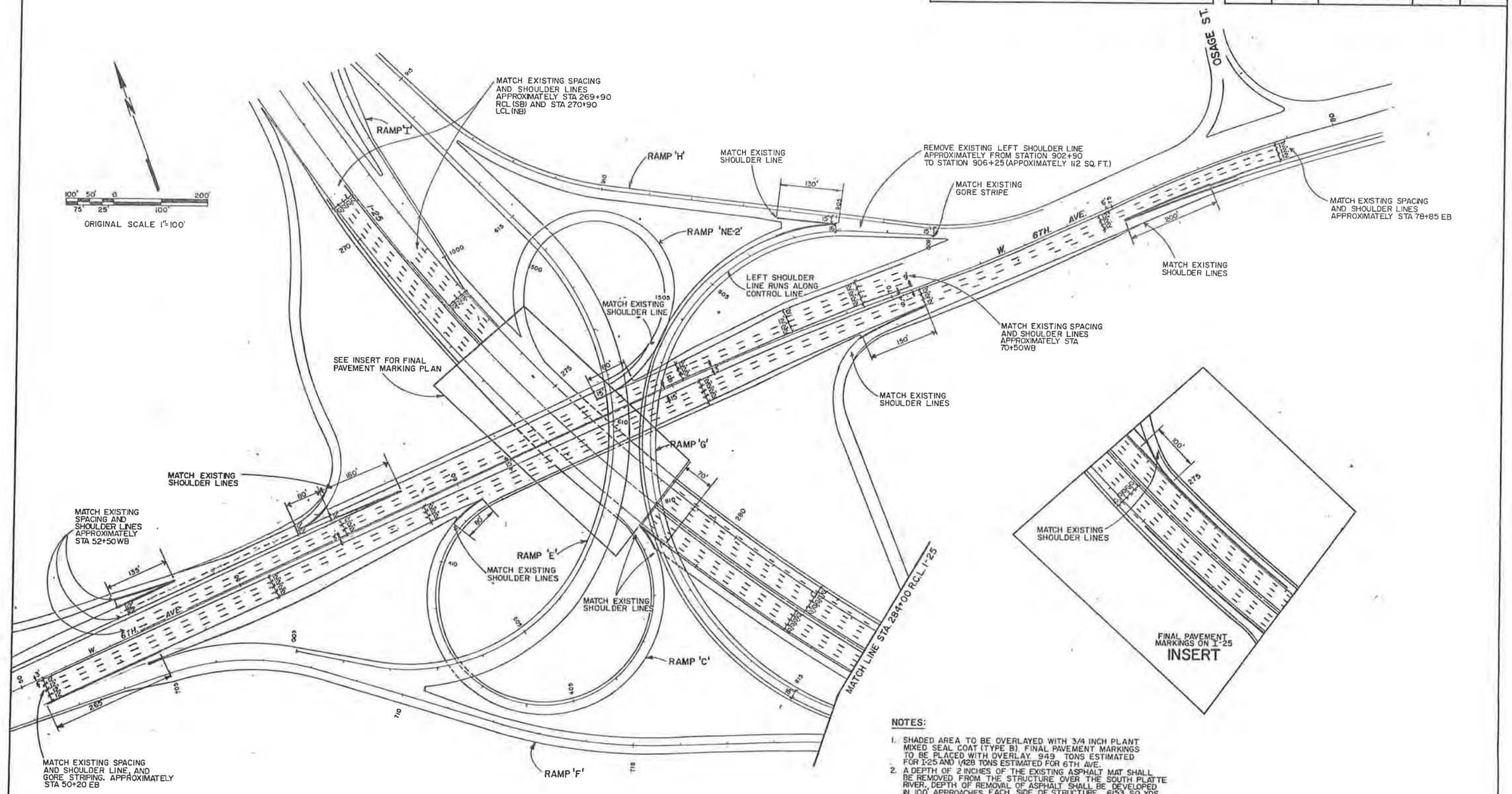

NOTES:

1. SHADED AREA TO BE OVERLAYED WITH 3/4 INCH PLANT MIXED SEAL COAT (TYPE B). FINAL PAVEMENT MARKINGS TO BE PLACED WITH OVERLAY. 949 TONS ESTIMATED FOR I-25 AND 1,428 TONS ESTIMATED FOR 6TH AVE.
2. A DEPTH OF 2 INCHES OF THE EXISTING ASPHALT MAT SHALL BE REMOVED FROM THE STRUCTURE OVER THE SOUTH PLATTE RIVER. DEPTH OF REMOVAL OF ASPHALT SHALL BE DEVELOPED IN 100' APPROACHES EACH SIDE OF STRUCTURE. 6153 SQ. YDS. REMOVAL OF ASPHALT MAT (PLANING) ESTIMATED.
3. PLACE A TACK COAT PRIOR TO PLACEMENT OF PLANT MIXED SEAL COAT. 1150 GALLONS ESTIMATED FOR I-25 AND 1,731 GALLONS ESTIMATED FOR 6TH AVE. OF EMULSIFIED ASPHALT (SLOW-SETTING).

FINAL PAVEMENT MARKING PLAN

STATE OF COLORADO
STATE DEPARTMENT OF HIGHWAYS
DIVISION OF HIGHWAYS
O. O. H. FORM NO. 126
REV. FEB. 1984

AS CONSTRUCTED				
NO REVISIONS ☐	REVISED ☐	VOID ☐		

FED. ROAD REGION	DIVISION	PROJ. NO.	SHEET NO.	SHEET TOTALS
VIII	COLO.	IR25-2(208)	70	

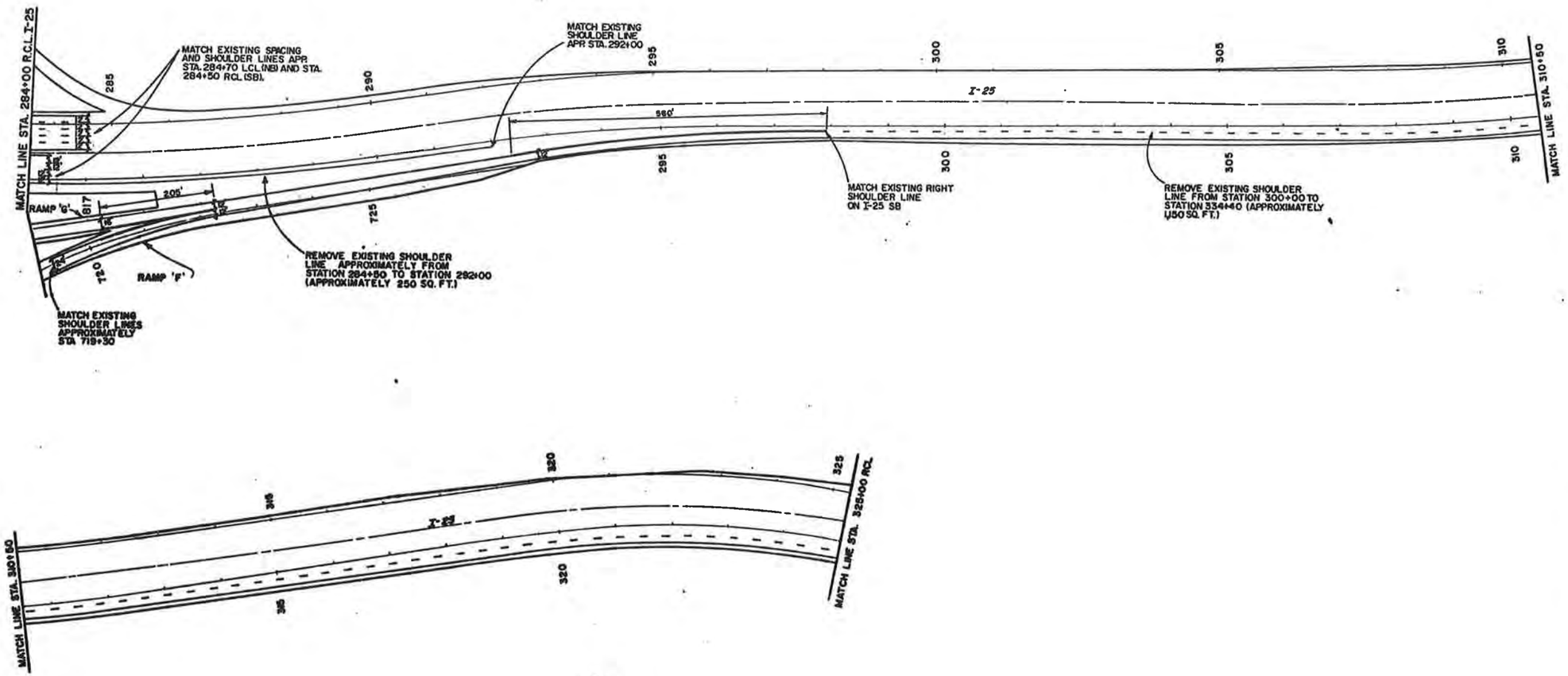

NOTES:

1. SHADED AREA TO BE OVERLAYED WITH 3/4 INCH PLANT MIXED SEAL COAT (TYPE B). FINAL PAVEMENT MARKINGS TO BE PLACED WITH OVERLAY. 232 TONS ESTIMATED FOR RAMP 'F' ENTRANCE.
2. PLACE A TACK COAT PRIOR TO PLACEMENT OF PLANT MIXED SEAL COAT. 282 GALLONS ESTIMATED FOR RAMP 'F' ENTRANCE OF EMULSIFIED ASPHALT (SLOW-SETTING).

100' 50' 0' 200'
75' 25' 100'
ORIGINAL SCALE 1" = 100'

FINAL PAVEMENT MARKING PLAN

STATE OF COLORADO
STATE DEPARTMENT OF HIGHWAYS
DIVISION OF HIGHWAYS:
D. O. H. FORM NO. 126:
REV. FEB. 1984

AS CONSTRUCTED		
NO REVISIONS	REVISED	VOID

FED. ROAD REGION	DIVISION	PROJ. NO.	SHEET NO.	SHEET TOTALS
VIII	COLO.	IR25-2(208)	71	

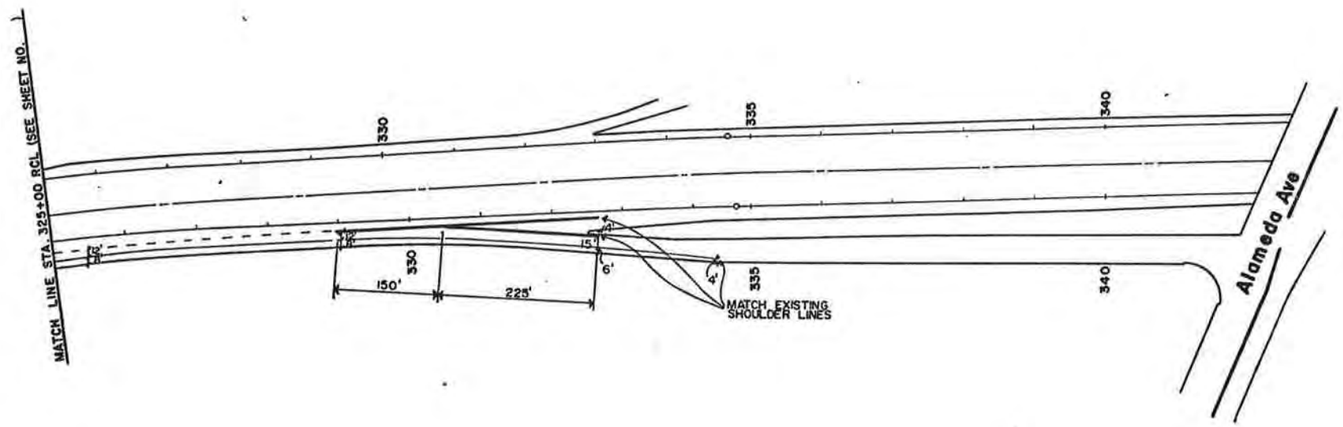

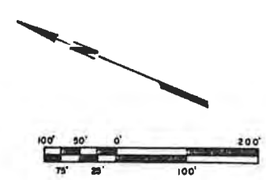

ORIGINAL SCALE 1" = 100'

FINAL PAVEMENT MARKING PLAN

STATE OF COLORADO
STATE DEPARTMENT OF HIGHWAYS
DIVISION OF HIGHWAYS:
D. O. H. FORM NO. 126:
REV. FEB. 1984

AS CONSTRUCTED			
NO REVISIONS	REVISED	VOID	

FED. ROAD REGION	DIVISION	PROJ. NO.	SHEET NO.	SHEET TOTALS
VIII	COLO.	IR25-2(208)	72	

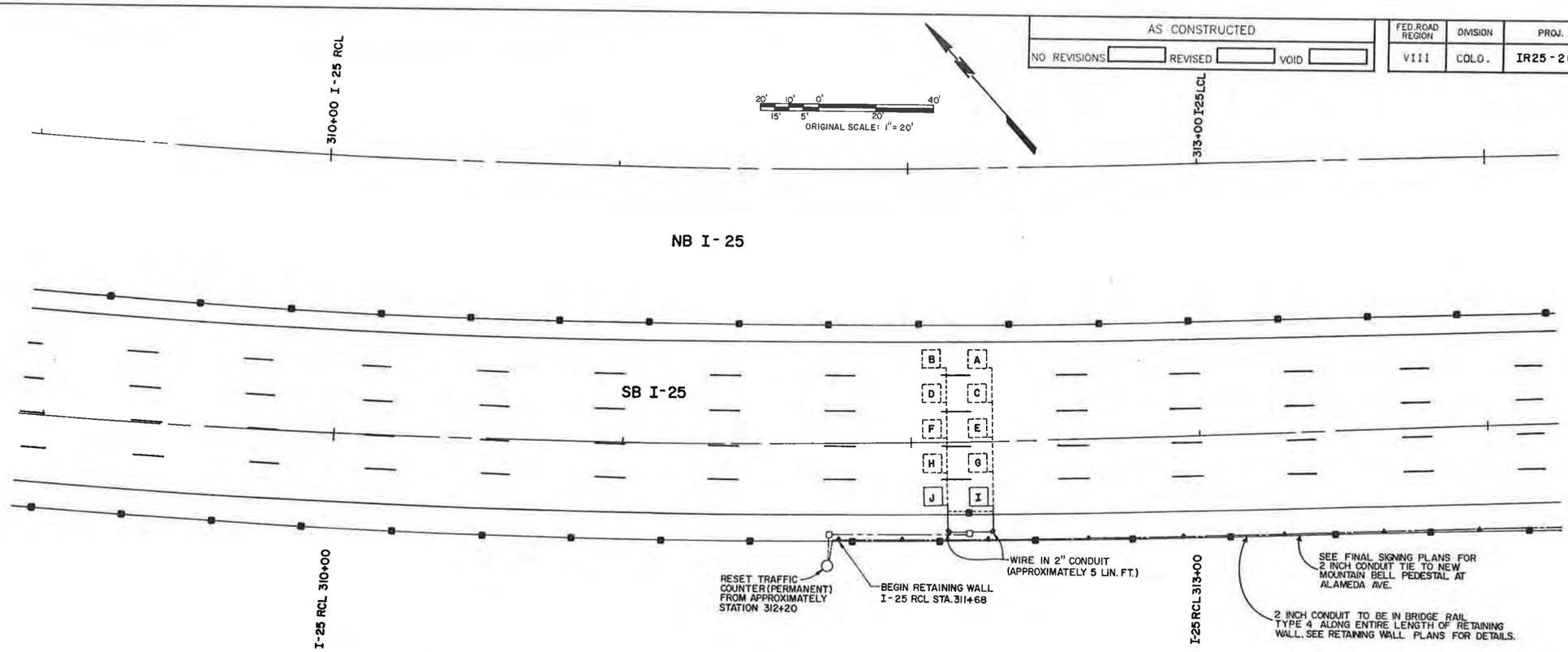

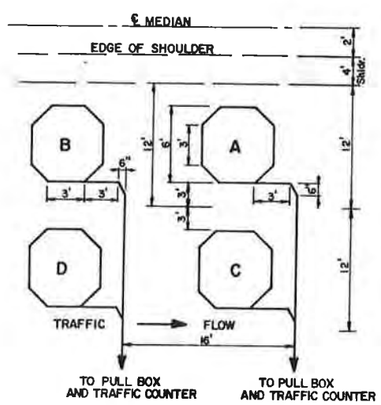

LOOP DETECTOR
INSTALLATION DETAIL

NOTES:

1. ALL LOOPS ARE 6'x6' CENTERED IN TRAVEL LANE.
2. LOOPS ARE TO BE INSTALLED AS PER CDOH SPECIFICATIONS (SEE STD. S-614-40, SHEET 3) OR AS DIRECTED BY THE ENGINEER.
3. ALL LOOPS MUST HAVE 4 WRAPS AND A PULL BOX. THE PULL BOX SHALL BE FURNISHED BY CDOH.
4. FOR DOUBLE LOOPS, THE LEADING EDGE TO LEADING EDGE MUST BE 16 FEET ± 1/4 INCH.
5. PULL BOX TO BE BELOW GROUND AS DIRECTED BY ENGINEER.
6. LOCATION OF TRAFFIC COUNTERS AND LOOPS ARE APPROXIMATE.
7. A WATERPROOF SPLICE SHALL BE MADE ON THE EXISTING LOOP DETECTOR WIRE TO NEW LOOP DETECTOR WIRE WHERE NECESSARY.
8. NOTIFY TRAFFIC SURVEYS UNIT AT 757-9488 WHEN DISCONNECTING AND CONNECTING TRAFFIC COUNTER SYSTEM.
9. MOUNTAIN BELL TO PROVIDE AND INSTALL WIRING AND TO PROVIDE AND INSTALL NEW PEDESTAL NEAR EXISTING PEDESTAL ALONG ALAMEDA AVE. EXIT.

LEGEND

- GUARD RAIL
- RETAINING WALL
- EXISTING PULL BOX
- NEW PULL BOX
- EXISTING LOOP DETECTOR WIRE
- NEW LOOP DETECTOR WIRE
- TRAFFIC COUNTER TO BE RESET
- 3 INCH ELECTRICAL CONDUIT
- 2 INCH ELECTRICAL CONDUIT

ITEM NO.	ITEM	UNIT	TOTALS
210	RESET TRAFFIC COUNTER (PERMANENT)	EA.	1
613	2 INCH ELECTRICAL CONDUIT	LIN. FT.	2440
613	3 INCH ELECTRICAL CONDUIT	LIN. FT.	70
614	LOOP DETECTOR WIRE	LIN. FT.	1900

PERMANENT TRAFFIC COUNTER

DEPARTMENT OF HIGHWAYS
DIVISION OF HIGHWAYS - STATE OF COLORADO
DRAWING NO. 210

AS CONSTRUCTED			
NO REVISIONS		REVISED	VOID

FEDERAL ROAD REGION NO.	DIVISION	PROJ NO	SHEET NO	TOTAL SHEETS
VIII	COLORADO	IR25-2(208)	73	

NOTES:

1. 48" Ø DRILLED CAISSONS SHALL BE REINFORCED WITH 18 - #9 VERTICAL BARS AND #4 TIES AT 12" CTS (FULL LENGTH) AND SHALL PENETRATE INTO BEDROCK A MINIMUM OF 5 FEET.
2. CONTRACTOR SHALL VERIFY LOCATION OF UTILITIES BEFORE DRILLING CAISSONS.
3. PEDESTAL SHALL BE INCLUDED IN THE COST OF THE 48" Ø DRILLED CAISSON. FOR PEDESTAL DETAILS SEE OVERHEAD SIGNS SHEET 2.
4. ELEVATIONS OF EXISTING CONDITIONS SHALL BE VERIFIED IN THE FIELD.
5. ACTUAL TOP OF BEDROCK ELEVATION SHALL BE VERIFIED BY THE FIELD ENGINEER.

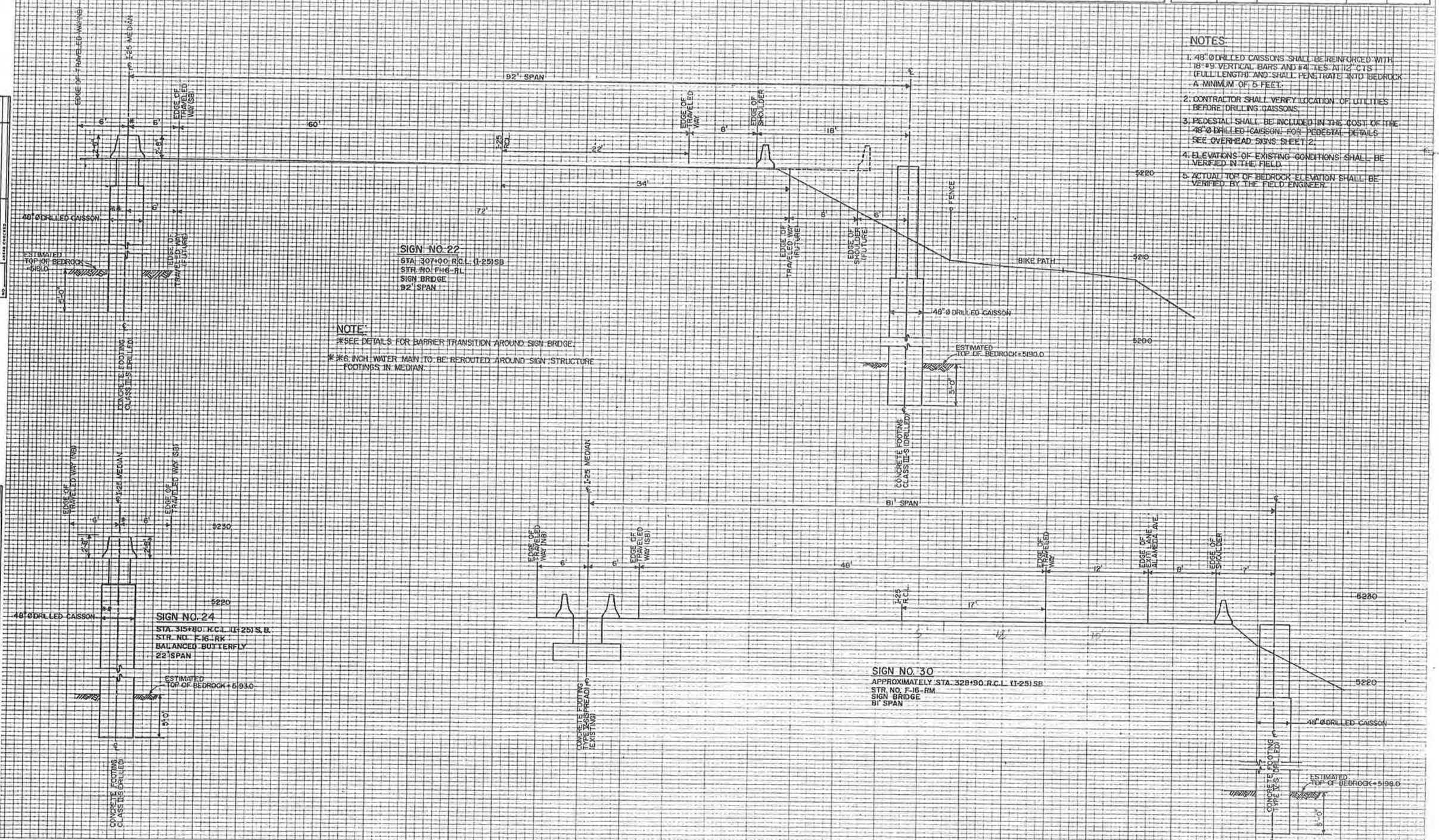

FINAL SURVEY — SURVEYED, PLOTTED, TEMPLATE, AREAS, AREAS CHECKED, NOTE BOOK, NO., DATE, BY

SURVEY — SURVEYED, PLOTTED, TEMPLATE, AREAS, AREAS CHECKED, NOTE BOOK, NO., DATE, BY

PLATE 3 FULL CROSS SECTION

MAR 14 2 E 4

ATE DEPARTMENT OF HIGHWAYS
VISION OF HIGHWAYS - STATE OF COLORADO
RM D.O.H. 128
LT 1968

CLASS III SIGNS - SHEET 1

AS CONSTRUCTED		
NO REVISIONS	REVISED	VOID

FEDERAL ROAD REGION NO.	DISTRICT	PROJ NO	SHEET NO.	TOTAL SHEETS
VIII	COLORADO	IR25-2(208)	74	

REVISIONS		

TYPICAL PANEL ELEVATIONS

HORIZONTAL SECTIONS

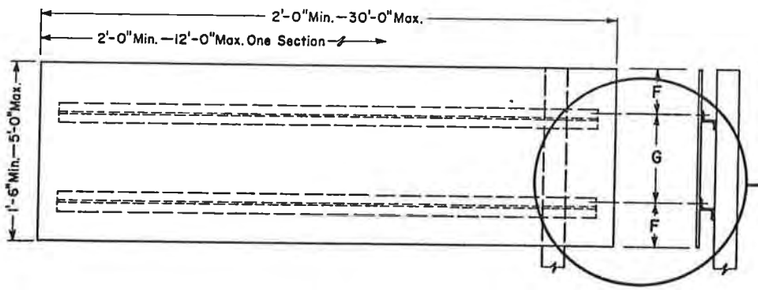

SECTIONS REQUIRED
Height x 2'-0" to 12'-0" = 1 Section
Height x 12'-6" to 24'-0" = 2 Sections
Height x 24'-6" to 30'-0" = 3 Sections

SEE TYPICAL DETAIL ON SHEET 2

VERTICAL SECTIONS

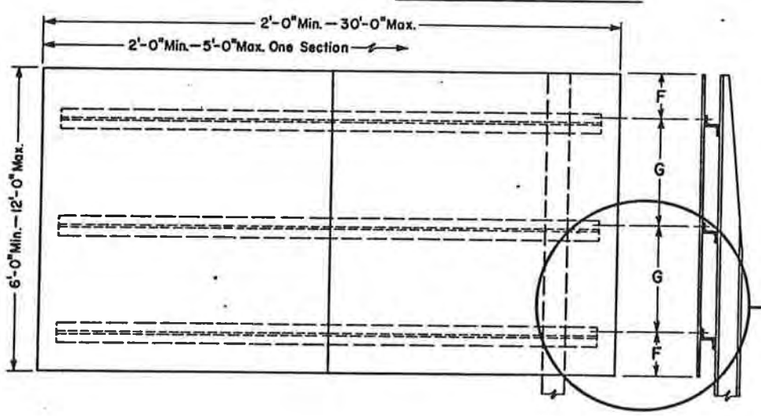

SECTIONS REQUIRED
Height x 2'-0" to 5'-0" = 1 Section
Height x 5'-6" to 10'-0" = 2 Sections
Height x 10'-6" to 15'-0" = 3 Sections
Height x 15'-6" to 20'-0" = 4 Sections
Height x 20'-6" to 25'-0" = 5 Sections
Height x 25'-6" to 30'-0" = 6 Sections

SEE TYPICAL DETAIL ON SHEET 2

MULTI-VERTICAL SECTIONS

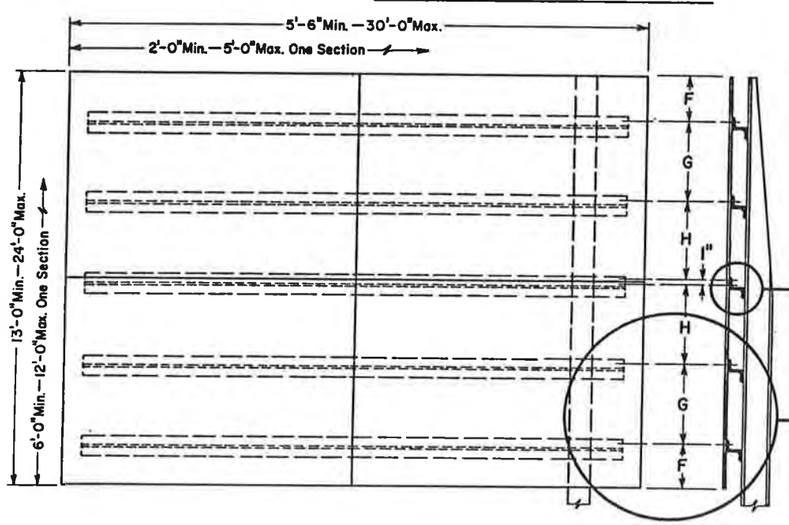

SECTIONS REQUIRED
Height x 5'-6" to 10'-0" = 4 Sections
Height x 10'-6" to 15'-0" = 6 Sections
Height x 15'-6" to 20'-0" = 8 Sections
Height x 20'-6" to 25'-0" = 10 Sections
Height x 25'-6" to 30'-0" = 12 Sections

SEE TYPICAL SEAM CLOSURE ZEE DETAIL ON SHEET 2

SEE TYPICAL DETAIL ON SHEET 2

GENERAL NOTES

1. ALL WORK SHALL BE DONE IN ACCORDANCE WITH THE STANDARD SPECIFICATIONS APPLICABLE TO THE PROJECT.
2. SEE THE APPLICABLE STANDARDS FOR SIGN PLACEMENT, FOOTING DETAILS AND POST SPACING TABLE.
3. A (No. 6) 90° COUNTERSUNK ALUMINUM LOCKBOLT FASTENER SHALL BE USED TO FASTEN THE SIGN PANEL TO THE BACKING ZEE. A HEX-HEAD BOLT WITH NUT AND WASHERS SHALL BE USED TO FASTEN THE BACKING ZEE TO A TIMBER POST OR TO A STEEL POST.
4. A FLAT WASHER SHALL BE PLACED BETWEEN THE BOLT HEAD AND THE BACKING ZEE. A LOCK WASHER SHALL BE PLACED UNDER THE NUT ON A STEEL POST OR A BACKING ZEE. A C.I. Ogee WASHER SHALL BE PLACED UNDER THE BOLT HEAD ON A TIMBER POST.
5. THE EXPOSED LOCKBOLT HEADS ON THE FACE OF THE SIGN PANEL SHALL BE COVERED WITH REFLECTIVE SHEETING (TO BE A PART OF THE LOCKBOLT HEAD) TO MATCH THE BACKGROUND COLOR OF THE SIGN.
6. ALL EXPOSED SIGN PANEL SECTION JOINTS, EXCEPT THE MULTI-VERTICAL SECTIONS HORIZONTAL SEAM, SHALL BE COVERED ON THE BACKSIDE OF THE SIGN PANEL WITH AN ALUMINUM CLOSURE STRIP. CLOSURE STRIPS SHALL BE BONDED TO THE SIGN PANEL WITH AN EPOXY RESIN WHICH MEETS THE REQUIREMENTS SPECIFIED IN ASTM DESIGNATION — D 1763, PART 9. ALL BONDED SURFACES SHALL BE CLEAN AND FREE OF ANY FOREIGN MATTER.
7. SIGN PANELS SHALL BE CONSTRUCTED FROM THE LEAST NUMBER OF SECTIONS. THE SECTIONS SHALL BE AS LARGE AS POSSIBLE AND AS NEARLY EQUAL IN SIZE AS POSSIBLE, ACCORDING TO THE LIMITS SHOWN.
8. FOR ADDITIONAL POST AND PANEL INFORMATION SEE THE "TABULATION OF SIGNS" INCLUDED IN THE PLANS.

SPACING TABLE FOR ALUMINUM BACKING ZEES

SIGN NO.	PANEL SIZE	NO. OF ZEES	ZEE SIZE	OVERHANG "F"	SPACING "G"	SPACING "H"
13a	16'x8'	4	3"x 2 11/16"x2.33	0'-9"	2'-2"	—
13b	15'x8'	4	3"x 2 11/16"x 2.33	0'-9"	2'-2"	—
14c	16'x12'	5	3"x 2 11/16"x 2.33	1'-0"	2'-6"	—
14d	15'x12'	5	3"x 2 11/16" x 2.33	1'-0"	2'-6"	—
22a	12'x15'	7	3" x 2 11/16" x 2.33	1'-0"	1'-10"	1'-9 1/2"
22c	12'x15'	7	3" x 2 11/16" x 2.33	1'-0"	1'-10"	1'-9 1/2"
24	22'x7'	3	3" x 2 11/16" x 2.33	1'-0	2'-6"	—
30a	12'x15'	7	3" x 2 11/16" x 2.33	1'-0"	1'-10"	1'-9 1/2"
30c	14'x15'	7	3" x 2 11/16" x 2.33	1'-0"	1'-10"	1'-9 1/2"
33	20'x7'	3	3" x 2 11/16" x 2.33	1'-0"	2'-6"	—

ALL SIGN PANELS ARE OVERHEAD SIGN PANELS

DEPARTMENT OF HIGHWAYS
STATE OF COLORADO
DIVISION OF HIGHWAYS

CLASS III SIGNS
SHEET ALUMINUM
PANELS

CLASS III SIGNS - SHEET 1

STATE DEPARTMENT OF HIGHWAYS
DIVISION OF HIGHWAYS — STATE OF COLORADO
FORM D O H 128
JULY 1964

CLASS III SIGNS - SHEET 2

AS CONSTRUCTED		
NO REVISIONS	REVISED	VOID

FEDERAL ROAD REGION NO	DISTRICT	PROJ NO	SHEET NO	TOTAL SHEETS
VIII	COLORADO	IR25-2(208)	75	

REVISIONS		

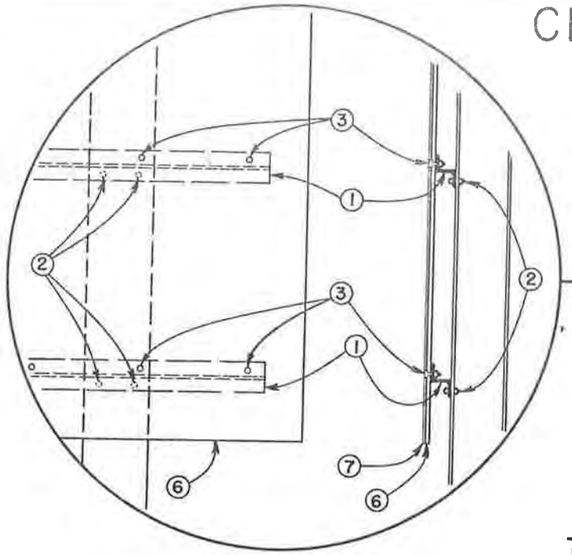

TYPICAL ELEVATION DETAIL

FABRICATION NOTES

1. BACKING ZEE. See "SPACING TABLE". Aluminum Alloy 6061-T6. Each zee to be provided with a 9/16" x 2" horizontal slot for each post mounting bolt. The length of each zee to be 1' less than the sign panel width.
2. 3/8" ø HEX-HEAD BOLT. With nut and washers: 2 per backing zee per post are required.
3. 3/8" ø (No. 6) 90° COUNTERSUNK ALUMINUM LOCKBOLT FASTENER.
4. 2" x 0.080" ALUMINUM CLOSURE STRIP.
5. 1/8" ø x 3/8" UNIVERSAL-HEAD, HOLLOW SHANK ALUMINUM RIVET.
6. SHEET ALUMINUM. 0.125" minimum thickness.
7. NON-EXPOSED LENS REFLECTIVE SHEETING. To have a dry (heat activated) adhesive backing.

TYPICAL DETAIL SEAM CLOSURE ZEE

(Multi-Vertical Sections, Horizontal Seam)

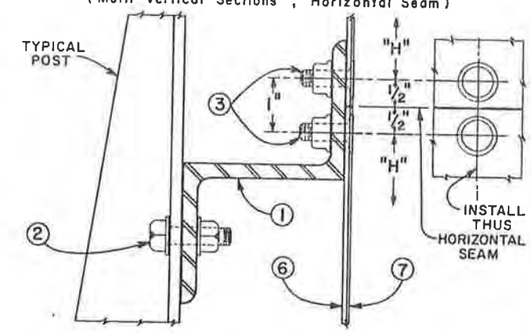

TYPICAL TIMBER POST INSTALLATION

TYPICAL VIEW

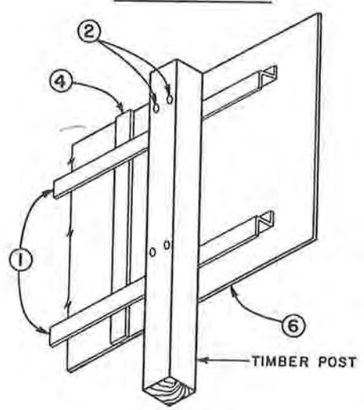

PANEL FABRICATION AND MOUNTING DETAILS

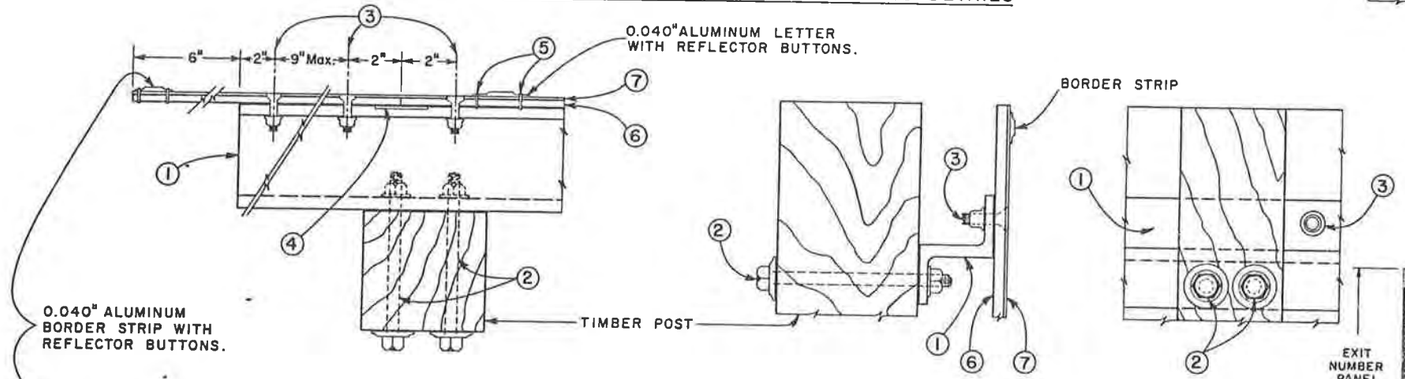

TYPICAL STEEL POST INSTALLATION

TYPICAL VIEW

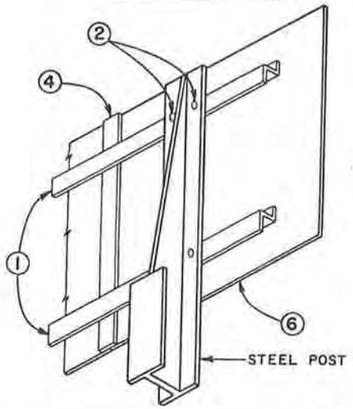

PANEL FABRICATION AND MOUNTING DETAILS

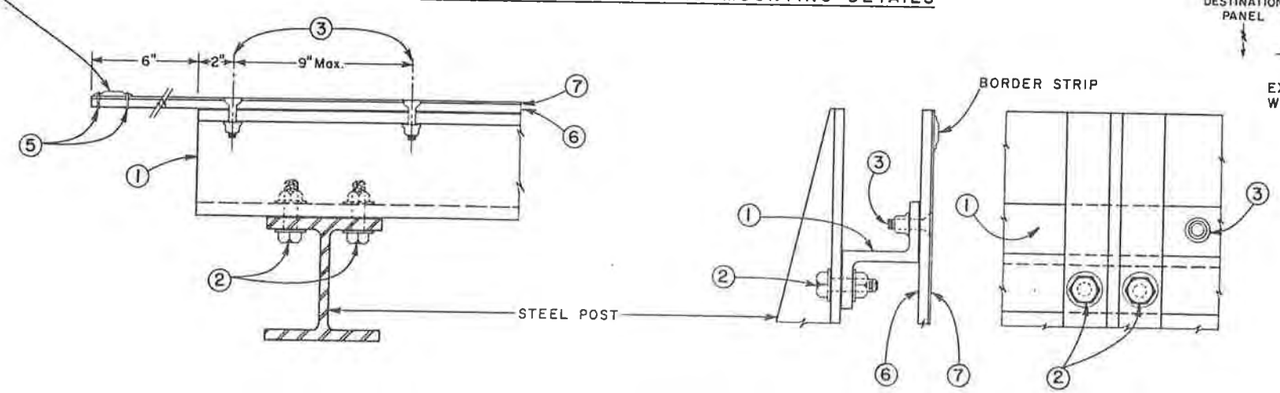

TYPICAL BORDER DETAILS EXIT NUMBER PANELS

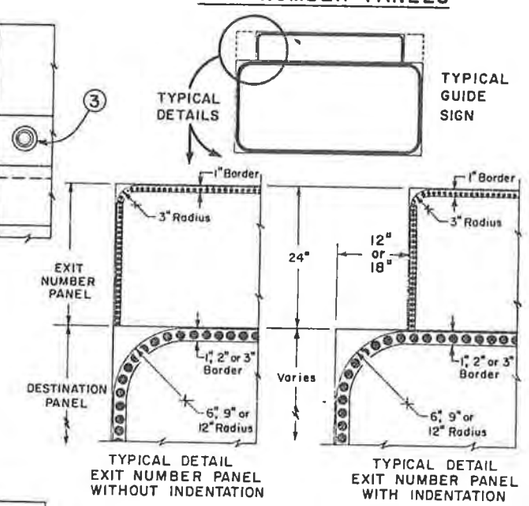

TYPICAL DETAIL EXIT NUMBER PANEL WITHOUT INDENTATION

TYPICAL DETAIL EXIT NUMBER PANEL WITH INDENTATION

DEPARTMENT OF HIGHWAYS
STATE OF COLORADO
DIVISION OF HIGHWAYS

CLASS III SIGNS
SHEET ALUMINUM
PANELS

CLASS III SIGNS - SHEET 2

DIVISION OF HIGHWAYS STATE OF COLORADO
1.3 H FORM 128
JULY 1968

AS CONSTRUCTED		
NO REVISIONS	REVISED	VOID

STANDARD S-614-5

(SHEET 1 OF 2 SHEETS)
JANUARY 1982

• SPECIAL FOR THIS PROJECT

FEDERAL ROAD REGION NO.	DIVISION	PROJ. NO.	SHEET NO.	TOTAL SHEETS
VIII	COLORADO	IR25-2(208)	76	

REVISIONS		

TYPICAL ELEVATION STEEL POST ASSEMBLY

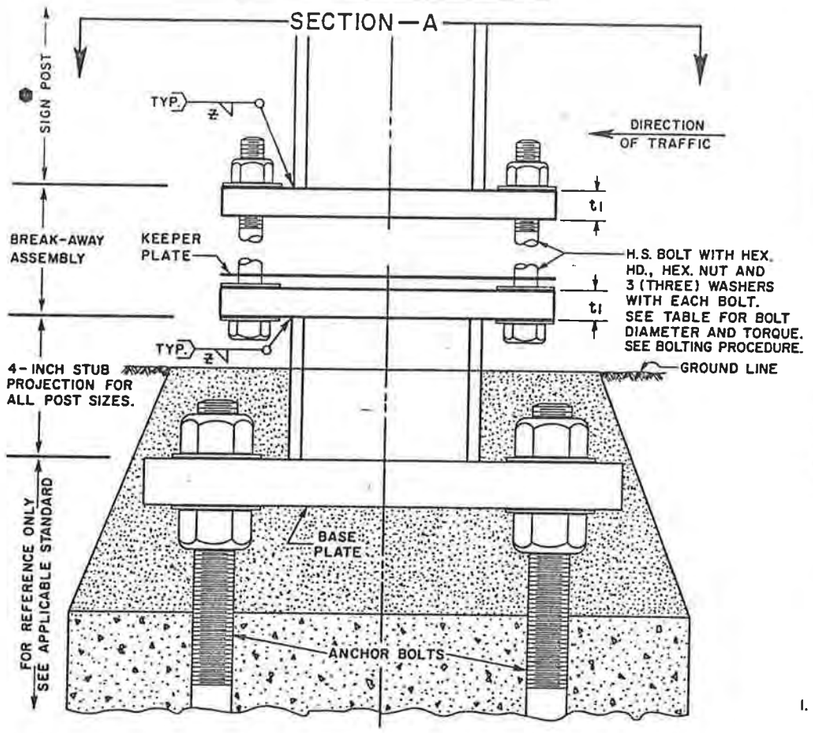

TYPICAL SECTION -A-

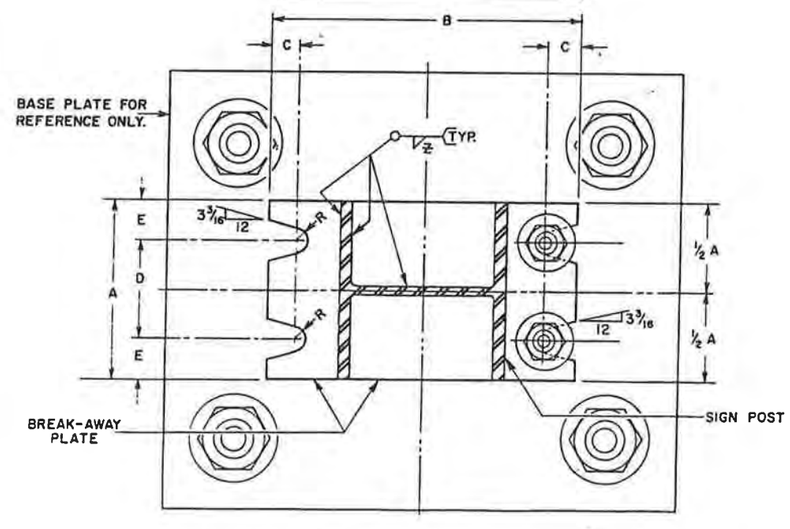

TYPICAL BREAK-AWAY SIGN SUPPORT INSTALLATIONS

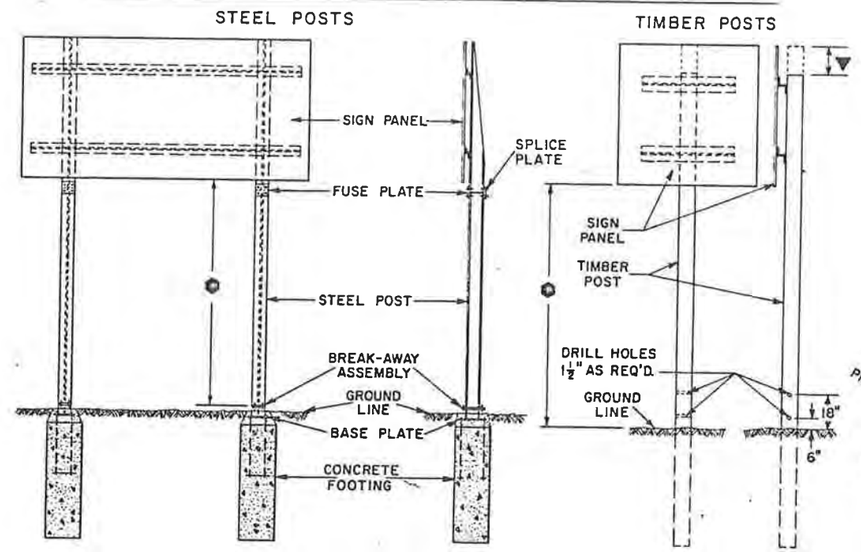

TYPICAL PROJECTED VIEW STEEL POST ASSEMBLY

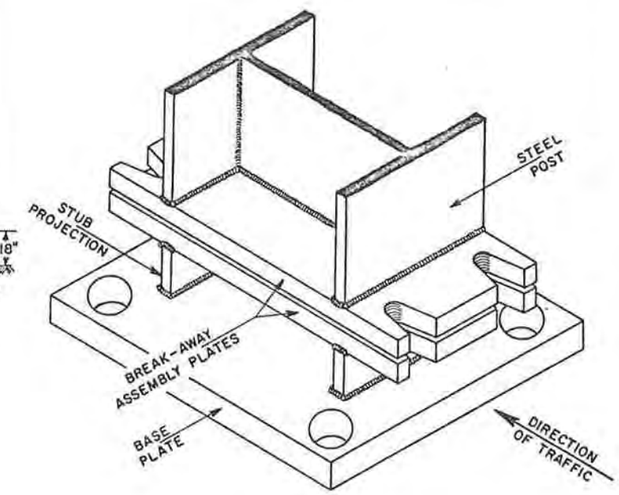

GENERAL NOTES

1. All work shall be done in accordance with the Standard Specifications applicable to the Project.
2. Design conforms with AASHTO "Specifications for the Design and Construction of Structural Supports for Highway Signs".
3. All structural steel shall conform to ASTM—A36 and Section 509 of the Standard Specifications.
4. Steel fuse plates and splice plates shall conform to ASTM—A36.
5. All high strength bolts, nuts and washers shall conform to ASTM—A325. Washers used in the Break-Away Plate and Fuse Plate assemblies shall be of sufficient strength to prevent any deflection or "cupping" into the slotted grooves under bolt torquing.
6. All bolts other than high strength bolts shall conform to ASTM—A307.
7. All bolts, nuts, and washers shall be galvanized as per ASTM-A153 or ASTM-A164.
8. All holes except at fuse plate may be drilled or sub-punched and reamed.
9. All steel cuts shall preferably be saw cuts; however, flame cutting will be permitted provided all edges are ground. Remove all burrs. Metal shall not project beyond the plane of the plate face.
10. A "Keeper Plate" of thin (28-gage) galvanized sheet metal, fabricated to match break-away plate dimensions but with holes rather than slots, shall be used to restrain bolt loosening due to wind vibration.
11. High strength bolts in the break-away assembly shall be tightened only to the torque shown in the table. DO NOT OVERTIGHTEN.
12. The "STUB POST" and one "BREAK-AWAY PLATE" are considered part of the footing. The other "BREAK-AWAY PLATE" and all nuts, bolts, washers and keeper plate for fastening the break-away plates are considered to be a part of the post.
13. Timber posts shall be in accordance with Section 614 of the Standard Specifications as to Size, Alternate Size, Grade, Species, Treatment, and Break-Away Holes.
14. For all base plate and footing work see the applicable Standard included in the plans.
15. For additional information, refer to "Tabulation of Signs" and "Cross Sections for Class III Signs" included in the plans.
16. ▼ Timber post flush with top of sign panel for direct mount and 3 3/16" minimum above bolt for backing zee mount.
17. ● Minimum post length from bottom of sign panel to break-away assembly or ground line shall be 7' (in no case shall a backing zee be placed below the fuse plates).

BREAK-AWAY PLATE DATA TABLE

POST SIZE \ DIMENSION	BOLT SIZE AND TORQUE	A	B	C	D	E	t1	WELD Z	R	STUB POST LENGTH
W 12 x 40	7/8" ø x 3 3/4" 1,135 In. Lb.	8"	19 1/4"	1 5/8"	4"	2"	1 1/4"	3/8"	15/32"	0'-4"
W 12 x 35	3/4" ø x 3 1/2" 750 In. Lb.	6 1/2"	17"	7/8"	3 1/2"	1 1/2"	1"	5/16"	13/32"	0'-4"
W 10 x 26		5 3/4"	14 7/8"	7/8"	3 1/4"	1 1/4"	1"	5/16"	13/32"	0'-4"
W 10 x 22		5 3/4"	14 5/8	7/8"	3 1/4"	1 1/4"	1"	5/16"	13/32"	0'-4"
W 8 x 21		5 1/4"	12 5/8"	7/8"	2 3/4"	1 1/4"	1"	5/16"	13/32"	0'-4"
W 8 x 18	5/8" ø x 2 3/4" 450 In. Lb.	5 1/4"	12"	3/4"	3"	1 1/8"	3/4"	1/4"	11/32"	0'-4"
W 6 x 15		6"	10"	3/4"	3 3/4"	1 1/8"	3/4"	1/4"	11/32"	0'-4"
W 6 x 12		5"	10"	3/4"	2 3/4"	1 1/8"	3/4"	1/4"	11/32"	0'-4"

BOLTING PROCEDURE FOR BREAK-AWAY PLATE ASSEMBLY

1. Assemble post to stub with bolts—one flat washer on each bolt top and bottom, and one flat washer and the keeper plate between the break-away plates.
2. Tighten all bolts to a "snug tight" condition with a 12" to 15" wrench to bed washers and to clean bolt threads, then loosen each bolt in turn and retighten in a systematic order to the prescribed torque. (See Break-Away Plate Data Table)
3. Burr threads at junction with nut to prevent nut loosening.

DEPARTMENT OF HIGHWAYS
STATE OF COLORADO
DIVISION OF HIGHWAYS
BREAK-AWAY SIGN SUPPORT DETAILS FOR GROUND SIGNS

Designed By: J. J. B.	Approved By: [signature] Staff Traffic &
Made By: F. J. B.	Safety Projects Engineer
Checked By: J. E. M	Date: January, 19 80

AS CONSTRUCTED		
NO REVISIONS	REVISED	VOID

STANDARD S-614-5

(SHEET 2 OF 2 SHEETS)
JANUARY 1982

SPECIAL FOR THIS PROJECT

FEDERAL ROAD REGION NO.	DIVISION	PROJ. NO.	SHEET NO.	TOTAL SHEETS
VIII	COLORADO	IR25-2(208)	77	

REVISIONS		

TYPICAL SIDE VIEW FUSE PLATE AND POST COPE

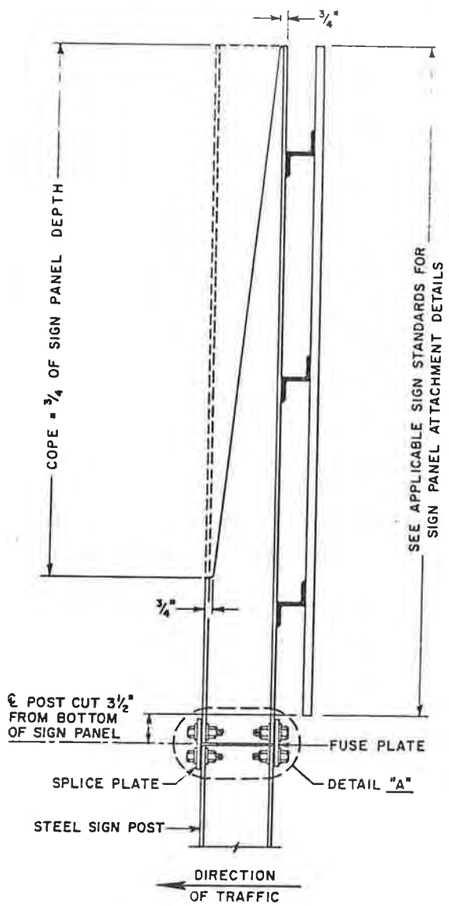

TYPICAL PROJECTED VIEW FUSE PLATE AND POST COPE

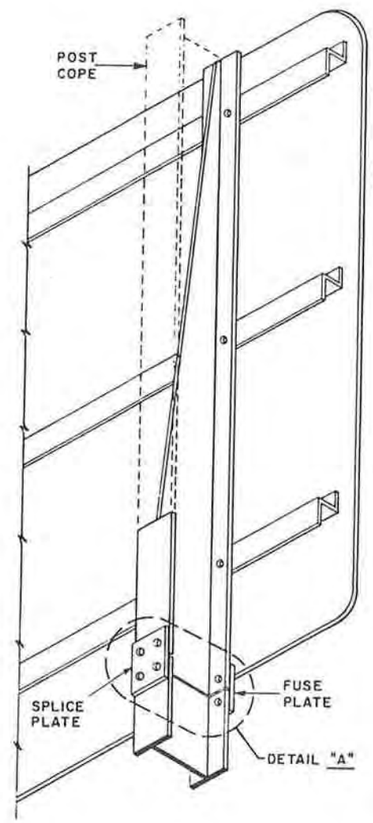

TYPICAL FUSE AND SPLICE PLATE HINGE DETAILS

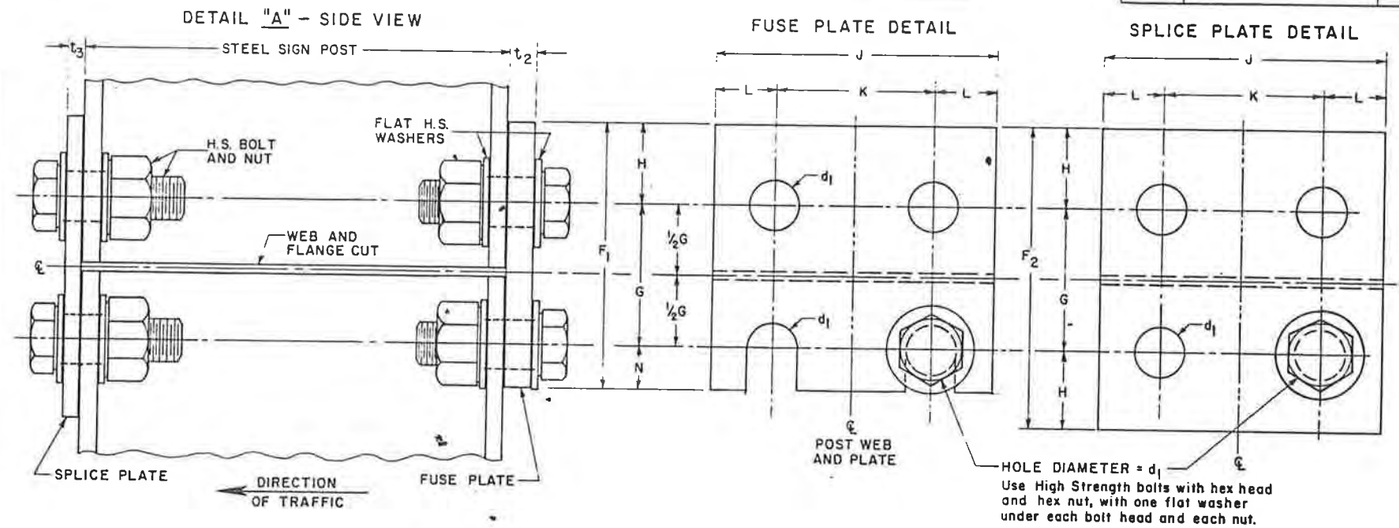

FUSE AND SPLICE PLATE HINGE DATA TABLE

POST \ SIZE	F_1	F_2	G	H	J	K	L	N	d_1	t_2	t_3	BOLT SIZE	MINIMUM RESIDUAL BOLT TENSION
W 12 x 40	6"	6 3/4"	3 1/4"	1 3/4"	8"	4"	2"	1"	15/16"	5/8"	7/16"	7/8" ø x 2 1/2"	36,050 LBS.
W 12 x 35	5 3/8"	6"	3"	1 1/2"	6 1/2"	3 1/2"	1 1/2"	7/8"	15/16"	9/16"	7/16"	7/8" ø x 2 1/2"	36,050 LBS.
W 10 x 26	5 3/8"	6"	3"	1 1/2"	5 3/4"	2 3/4"	1 1/2"	7/8"	15/16"	9/16"	7/16"	7/8" ø x 2 1/2"	36,050 LBS.
W 10 x 22	5 3/8"	6"	3"	1 1/2"	5 3/4"	2 3/4"	1 1/2"	7/8"	15/16"	9/16"	3/8"	7/8" ø x 2 1/4"	36,050 LBS.
W 8 x 21	4 7/8"	5 1/2"	2 1/2"	1 1/2"	5 1/4"	2 3/4"	1 1/4"	7/8"	15/16"	9/16"	3/8"	7/8" ø x 2 1/4"	36,050 LBS.
W 8 x 18	4 1/2"	5"	2 1/2"	1 1/4"	5 1/4"	2 3/4"	1 1/4"	3/4"	13/16"	1/2"	3/8"	3/4" ø x 2"	28,400 LBS.
W 6 x 15	4 1/2"	5"	2 1/2"	1 1/4"	6"	3 1/2"	1 1/4"	3/4"	13/16"	1/2"	1/4"	3/4" ø x 1 3/4"	28,400 LBS.
W 6 x 12	3 3/4"	4 1/4"	2"	1 1/8"	4"	2 1/4"	7/8"	5/8"	11/16"	3/8"	1/4"	5/8" ø x 1 3/4"	19,200 LBS.

FABRICATION NOTES

Fuse plate and its post-flange holes shall be drilled. [illegible]
Install fuse plate with the notches toward the base of the post.
IMPORTANT— All fuse plate hinge bolts shall be tightened in the shop following a method approved by the Engineer. Tightening shall be to such a degree as to obtain the minimum residual tension in each of the bolts.
Burr threads at junction with nut to prevent nut loosening.

DEPARTMENT OF HIGHWAYS
STATE OF COLORADO
DIVISION OF HIGHWAYS
BREAK-AWAY SIGN SUPPORT DETAILS FOR GROUND SIGNS

Designed By: J. J. B.	Approved By: [signature] Staff Traffic &
Made By: F. J. B.	Safety Projects Engineer
Checked By: J. E. M.	Date: January, 19 80

ATE DEPARTMENT OF HIGHWAYS
VISION OF HIGHWAYS-STATE OF COLORADO
OH FORM 126
PTEMBER 1972

OVERHEAD SIGNS—SHEET 1

FEDERAL ROAD REGION NO.	DIVISION	PROJ. NO.	SHEET NO.	TOTAL SHEETS
VIII	COLORADO	IR25-2(208)	78	

AS CONSTRUCTED

NO REVISIONS ☐ REVISED ☐ VOID ☐

REVISIONS		

ELEVATION

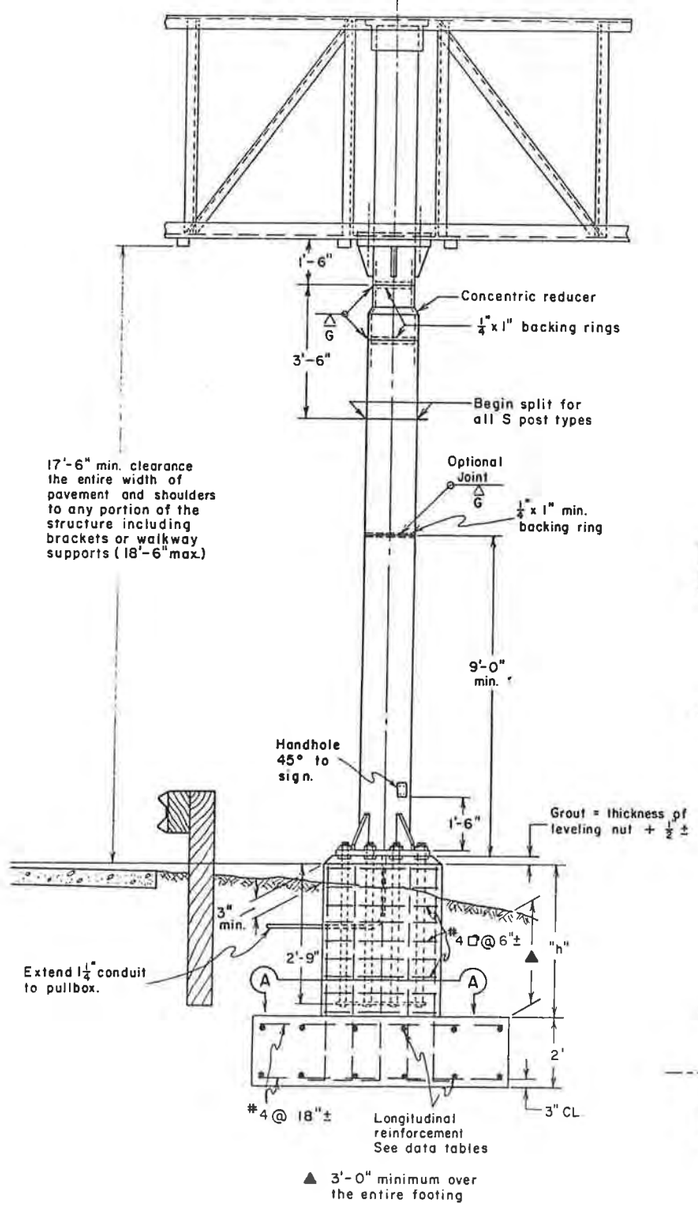

HANDHOLE DETAILS

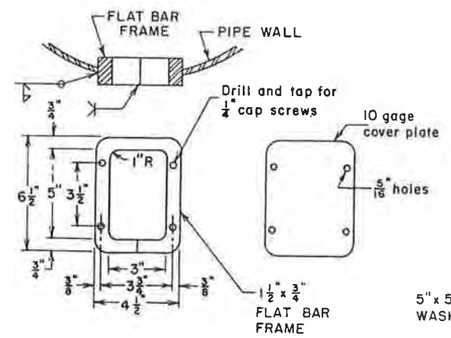

ANCHORAGE DETAILS

SIDE BOLT (Type II thru VII only - 2 Required)

FRONT & BACK BOLTS (All Types - 2 Required shown for 4 bolts and similar for 2 and 3 bolts)

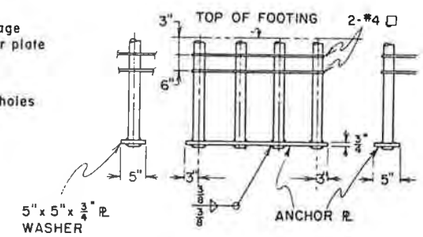

TYPICAL VIEWS

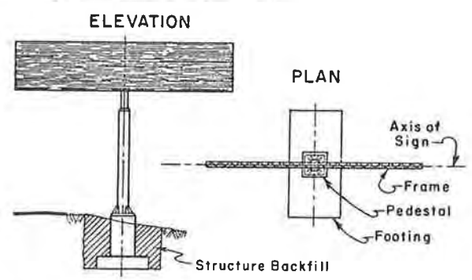

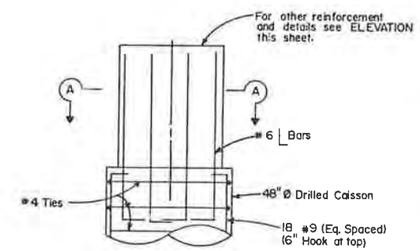

DETAIL 1
(FOR SIGNS NO. 22, 24, AND 30)

SECTION A-A

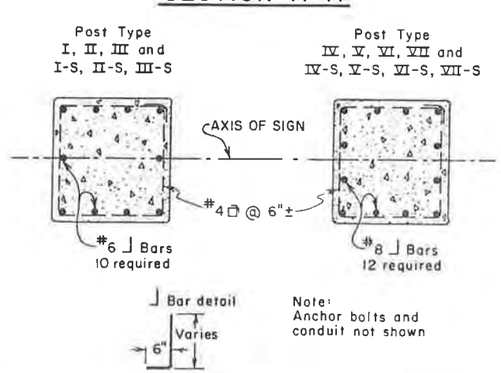

Note: Anchor bolts and conduit not shown

GENERAL NOTES

1. All work shall be done in accordance with Standard Specifications applicable to the project and "Standard Specifications For Structural Supports For Highway Signs, Luminaires And Traffic Signals", A.A.S.H.T.O. current issue.
2. Wind loading 35 P.S.F. normal to panel area.
3. UNIT STRESSES:
   a. Structural steel: F_s = 18,000 P.S.I.
   b. Reinforced concrete: F_s = 20,000 P.S.I.
   c. Footing soil pressure: 1 1/4 TONS / SQ. FT.
   d. Allowable unit stresses due to wind load or wind load in combination with other forces are increased 33 1/3 %.
4. For reinforcement, embedment is clear to outside of bar and is 2" to main reinforcement, except as shown.
5. Base plates, pedestals, and footings, longer sides shall be normal to the axis of sign.
6. Backfill shall be in place prior to erection of post.
7. On single post sign structures, the post shall be raked out of plumb, with the use of the leveling nuts to make the bottom of the sign frame level.
8. Ground one post of each structure.
9. Tapered tube of equivalent size and thickness may be substituted for pipe post
10. For SIGN BRIDGES only, a constant diameter pipe post of the base section size may be used in lieu of the two diameter sections shown.

TABULATION OF POSTS AND PEDESTALS

SIGN NO	STRUCTURE TYPE	POST TYPE	PEDESTAL HEIGHT "h" ONE POST	TWO POSTS Lt.	TWO POSTS Rt.
13	SIGN BRIDGE	II-S	—	●■	●■
22	SIGN BRIDGE	III-S	—	* 6'-0"	13'-6"
24	BUTTERFLY	II-S	*6'-0"	—	—
30	SIGN BRIDGE	V-S	—	●	8'-6"

● EXISTING PEDESTAL
■ POST LENGTH TO BE REDUCED 2'-1"
* POST LENGTH TO BE REDUCED 2'-8" (MAXIMUM HEIGHT OF CONCRETE BARRIER AROUND PEDESTAL

DEPARTMENT OF HIGHWAYS
STATE OF COLORADO
DIVISION OF HIGHWAYS

OVERHEAD SIGNS
POSTS &
FOOTINGS (SPREAD)

OVERHEAD SIGNS — SHEET 2

FEDERAL ROAD REGION NO.	DISTRICT	PROJ. NO.	SHEET NO.	TOTAL SHEETS
VIII	COLORADO	IR25-2(208)	79	

AS CONSTRUCTED

NO REVISIONS ____ REVISED ____ VOID ____

REVISIONS		

POSTS TYPES I - VII & BASE PLATES

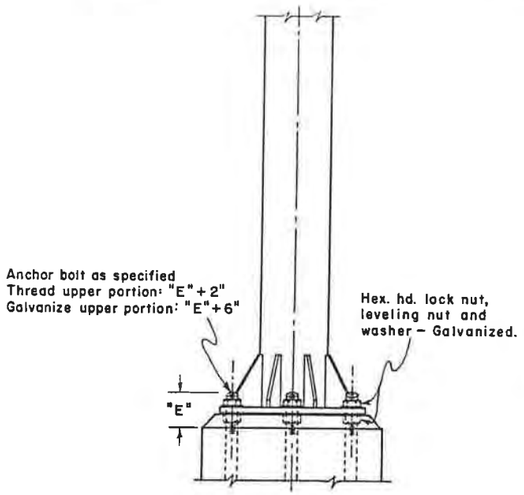

4 ANCHOR TYPE

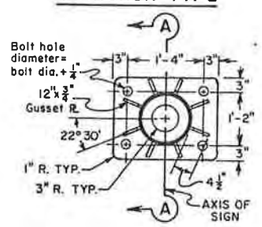

8 ANCHOR TYPE

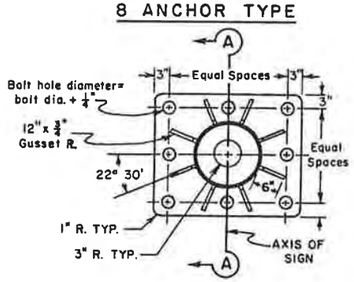

10 ANCHOR TYPE

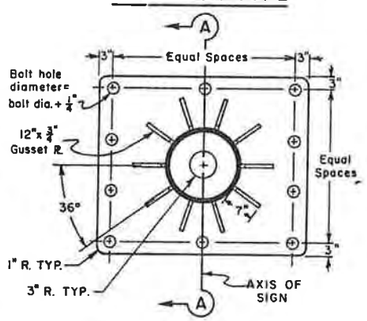

SECTION A-A

COMMON TO ALL TYPES

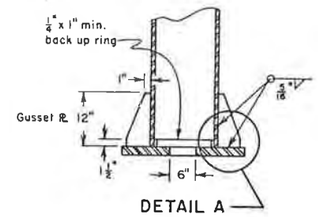

DETAIL A

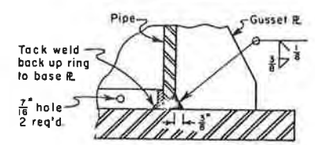

POSTS TYPES I-S - VII-S & BASE PLATES

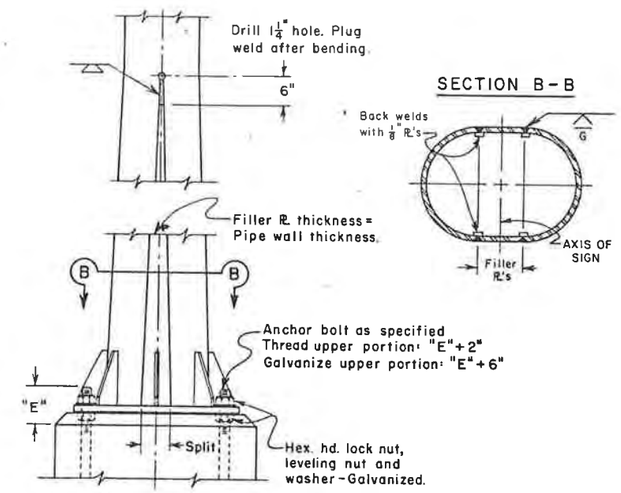

SECTION B-B

6 ANCHOR TYPE

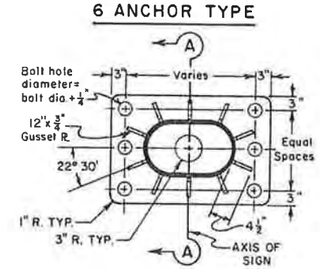

8 ANCHOR TYPE

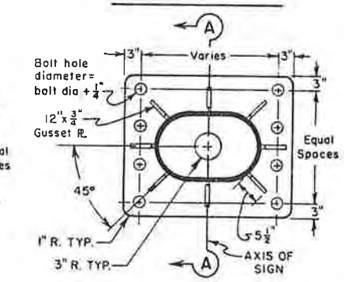

TYPES I THRU VII DATA TABLE

POST TYPE	PIPE SIZES: BASE SECTION	PIPE SIZES: UPPER SECTION	REDUCER LENGTH	"E"	BASE PLATE SIZE	ANCHOR BOLTS	PEDESTAL SIZE	FOOTING SIZE	LONGITUDINAL FOOTING REINFORCEMENT: TOP	LONGITUDINAL FOOTING REINFORCEMENT: BOTTOM
I	10" Std. @ 40.48	8" Std. @ 28.55	7"	8"	1'-10" x 1'-8" x 1 1/2"	4 - 2" φ	2'-5" x 2'-3"	5'-0" x 9'-0"	6-#4 bars	6-#4 bars
II	12" Std. @ 49.56	10" Std. @ 34.24	8"	7 1/2"	2'-4" x 2'-1" x 1 1/2"	8 - 1 3/4" φ	2'-11" x 2'-8"	6'-0" x 10'-0"	6-#4 bars	6-#4 bars
III	14" O.D. @ 72.09	12" Std. @ 43.77	1'-1"	8 1/2"	2'-7" x 2'-3" x 1 3/4"	8 - 2" φ	3'-2" x 2'-10"	7'-0" x 12'-0"	6-#5 bars	6-#5 bars
IV	16" O.D. @ 82.77	14" O.D. @ 54.57	1'-2"	8 1/2"	3'-1" x 2'-9" x 2"	10-2" φ	3'-8" x 3'-4"	7'-0" x 13'-0"	6-#5 bars	6-#5 bars
V	18" O.D. @ 93.45	16" O.D. @ 62.58	1'-3"	8 1/2"	3'-3" x 3'-0" x 1 3/4"	10-2" φ	3'-10" x 3'-7"	8'-0" x 14'-0"	7-#5 bars	7-#6 bars
VI	20" O.D. @ 104.13	18" O.D. @ 70.59	1'-8"	8 1/2"	3'-3" x 3'-0" x 2"	10-2" φ	3'-10" x 3'-7"	9'-0" x 15'-0"	6-#6 bars	6-#7 bars
VII	24" O.D. @ 125.49	20" O.D. @ 78.60	1'-8"	10"	3'-7" x 3'-3" x 2 1/2"	10-2 1/4" φ	4'-3" x 3'-11"	10'-0" x 17'-0"	7-#6 bars	7-#8 bars

TYPES I-S THRU VII-S DATA TABLE

POST TYPE	PIPE SIZES: BASE SECTION	PIPE SIZES: UPPER SECTION	REDUCER LENGTH	"E"	SPLIT	BASE PLATE SIZE	ANCHOR BOLTS	PEDESTAL SIZE	FOOTING SIZE	LONGITUDINAL FOOTING REINFORCEMENT: TOP	LONGITUDINAL FOOTING REINFORCEMENT: BOTTOM
I-S	10" Std. @ 40.48	8" Std. @ 28.55	7"	6 1/2"	4"	2'-1" x 1'-9" x 1 1/2"	6 - 1 1/2" φ	2'-7" x 2'-3"	5'-0" x 10'-0"	5-#4 bars	5-#6 bars
II-S	12" Std. @ 49.56	10" Std. @ 34.24	8"	7 1/2"	5"	2'-5" x 1'-11" x 1 1/2"	6 - 1 3/4" φ	3'-0" x 2'-6"	6'-0" x 11'-0"	6-#4 bars	6-#7 bars
III-S	14" O.D. @ 72.09	12" Std. @ 43.77	1'-1"	8 1/2"	5"	2'-9" x 2'-0" x 2"	6 - 2" φ	3'-4" x 2'-7"	7'-0" x 13'-0"	7-#4 bars	7-#8 bars
IV-S	16" O.D @ 82.77	14" O.D. @ 54.57	1'-2"	8 1/2"	6"	2'-11" x 2'-7" x 2"	8 - 2" φ	3'-6" x 3'-2"	8'-0" x 14'-0"	8-#5 bars	8-#9 bars
V-S	18" O.D. @ 93.45	16" O.D. @ 62.58	1'-3"	8 1/2"	7"	3'-1" x 2'-9" x 2"	8 - 2" φ	3'-8" x 3'-4"	8'-0" x 16'-0"	8-#5 bars	8-#9 bars
VI-S	20" O.D. @ 104.13	18" O.D. @ 70.59	1'-8"	8 1/2"	8"	3'-5" x 2'-9" x 2"	8 - 2" φ	4'-0" x 3'-4"	9'-0" x 17'-0"	9-#5 bars	9-#10 bars
VII-S	24" O.D. @ 125.49	20" O.D. @ 78.60	1'-8"	9 1/2"	8"	3'-9" x 3'-3" x 2"	8 - 2 1/4" φ	4'-5" x 3'-11"	10'-0" x 18'-0"	10-#6 bars	10-#11 bars

DEPARTMENT OF HIGHWAYS
STATE OF COLORADO
DIVISION OF HIGHWAYS

OVERHEAD SIGNS
POSTS &
FOOTINGS (SPREAD)

OVERHEAD SIGNS - SHEET 3

FEDERAL ROAD REGION NO.	DIVISION	PROJ. NO	SHEET NO.	TOTAL SHEETS
VIII	COLORADO	IR25-2(208)	80	

REVISIONS		

AS CONSTRUCTED		
NO REVISION	REVISED	VOID

NOTE: Angle iron truss box structures are not permitted. See the project special provision requiring tubular design.

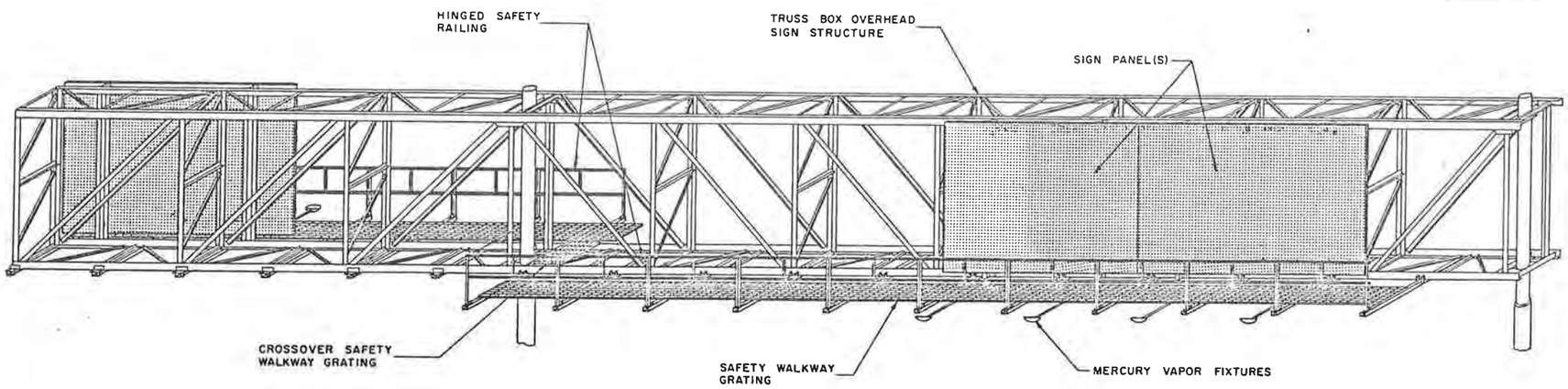

TYPICAL VIEW OF ASSEMBLED MEMBERS

GENERAL NOTES

1. All work shall be done in accordance with:
   (a) the Standard Specifications applicable to the project.
   (b) the "Manual on Uniform Traffic Control Devices for Streets and Highways" published by the Federal Highway Administration, and the latest revision of the Colorado Supplement thereto.
   (c) AASHO specifications for the design and construction of Structural Supports for Highway Signs.
2. Safety walkway grating shall be welded-type with 1¼" x ⅛" bearing bars at 1 3/16" centers and 3/16" dia. (or equal) crossbars at 4" centers.
3. Brackets to be evenly spaced with a maximum center to center spacing of 5'-6".
4. Bolts, nuts, washers, etc. shall be galvanized or cadmium plated.
5. Walkway grating, brackets and railing shall be painted in accordance with Section 509, wiring shall be in accordance with Section 613.
6. Crossover safety walkway to be used when sign bridges have sign panels facing two directions.

LIGHTING NOTES

1. Fixtures shall be watertight, dustproof and designed for ease of lamp replacement.
2. Lamp shall be of the Mercury Vapor type (400 Watt). Lamps and ballasts shall be designed to operate over an ambient temperature range of −25° F to +120° F.
3. Ballasts shall operate from a 120 volt, 60 hz., single phase source with a regulated output of ± 12%. Ballasts shall be housed in a watertight dustproof enclosure.
4. The type, number and spacing of fixtures shall be per manufactures specifications to maintain a maximum initial illumination of the sign face of 30 foot candles to 60 foot candles with a maximum uniformity ratio (maximum illumination/minimum illumination) of 5:1.
5. Fixture and mounting details will be subject to approval by the Engineer.

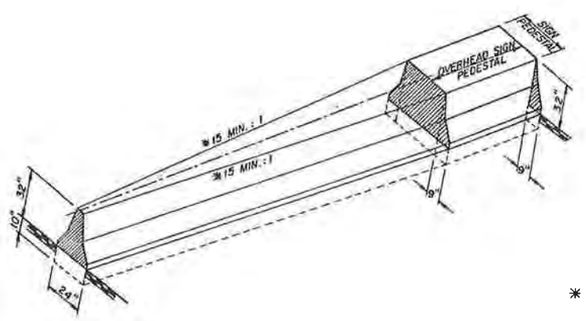

NOTE: Cost of Guard Rail Transitions Around Sign Bridge Pedestals to be Included in the Cost of the Pedestal.

* 15:1 Flare Rate Based On A 55 M.P.H. Operating Speed.

DETAIL OF GUARD RAIL TYPE 4 TRANSITION AROUND SIGN BRIDGE PEDESTALS IN I-25 MEDIAN

SIGN NO. 22 STA. 307+00
SIGN NO. 24 STA. 315+80

DEPARTMENT OF HIGHWAYS
STATE OF COLORADO
DIVISION OF HIGHWAYS
LIGHT FIXTURE
SAFETY WALKWAY,
AND
PEDESTAL DETAILS

OVERHEAD SIGNS - SHEET 4

FEDERAL ROAD REGION NO.	DIVISION	PROJ. NO.	SHEET NO.	TOTAL SHEETS
VIII	COLORADO	IR25-2(208)	81	

REVISIONS

AS CONSTRUCTED

NO REVISIONS ☐ REVISED ☐ VOID ☐

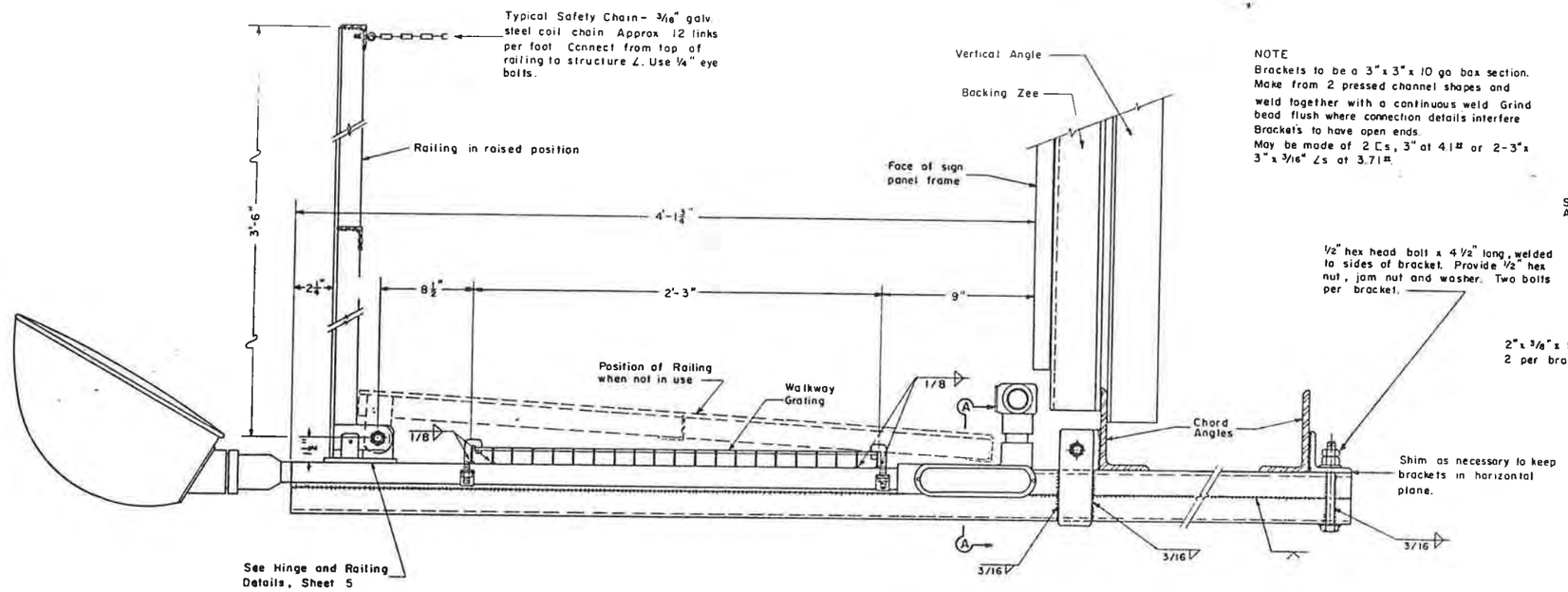

NOTE
Brackets to be a 3" x 3" x 10 ga box section. Make from 2 pressed channel shapes and weld together with a continuous weld. Grind bead flush where connection details interfere. Brackets to have open ends. May be made of 2 Cs, 3" at 4.1# or 2-3" x 3" x 3/16" ∠s at 3.71#.

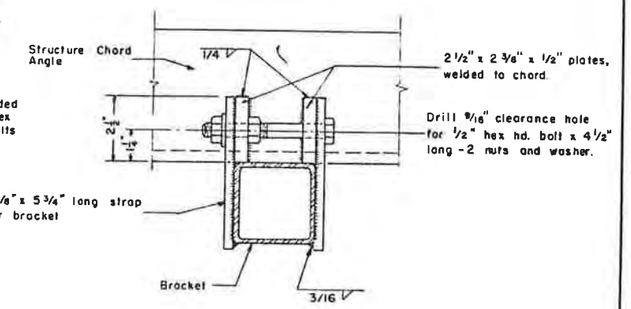

SECTION A-A

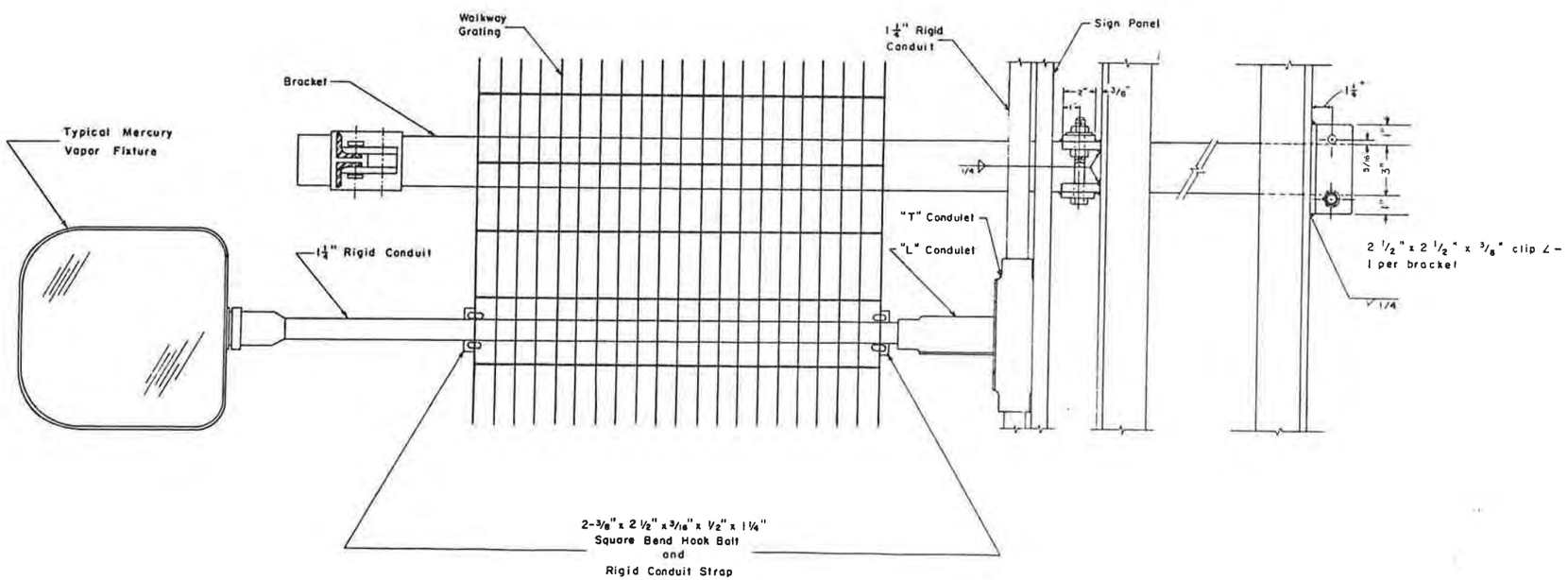

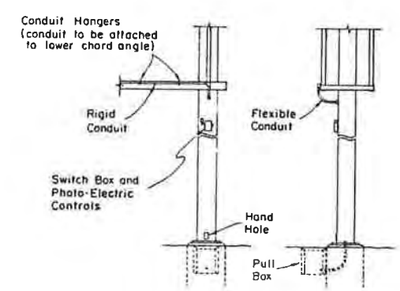

TYPICAL ELECTRICAL CONNECTION DETAIL

DEPARTMENT OF HIGHWAYS
STATE OF COLORADO
DIVISION OF HIGHWAYS
LIGHT FIXTURE
AND
SAFETY WALKWAY
DETAILS

ORIGINAL

DEPARTMENT OF HIGHWAYS
OF HIGHWAYS – STATE OF COLORADO
H 126

OVERHEAD SIGNS - SHEET 5

FEDERAL ROAD REGION NO	DIVISION	PROJ. NO.	SHEET NO	TOTAL SHEETS
VIII	COLORADO	IR25-2(208)	82	

REVISIONS		

AS CONSTRUCTED

NO REVISION ☐ REVISED ☐ VOID ☐

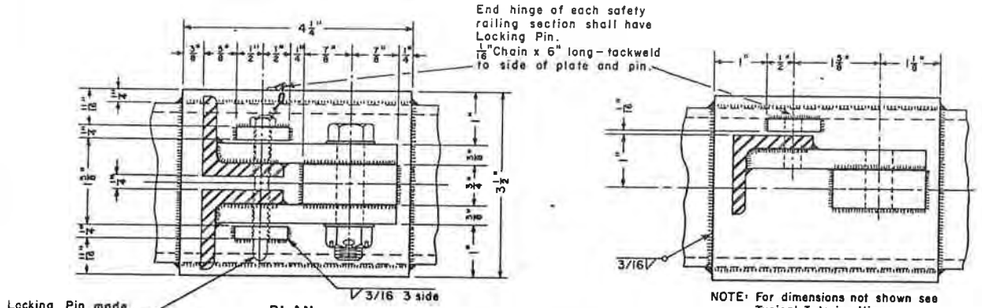

PLAN

TYPICAL INTERIOR HINGE

PLAN

TYPICAL EXTERIOR HINGE

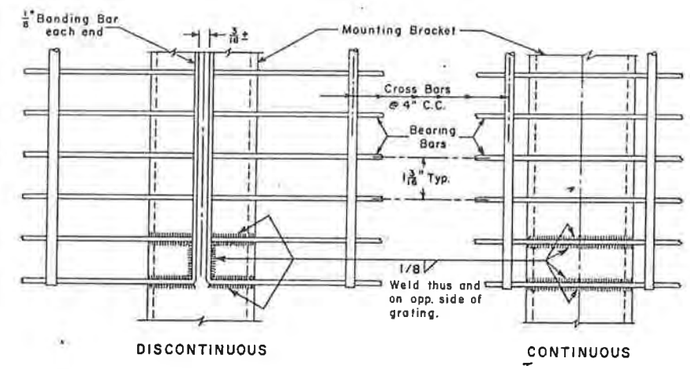

TYPICAL WALKWAY GRATING

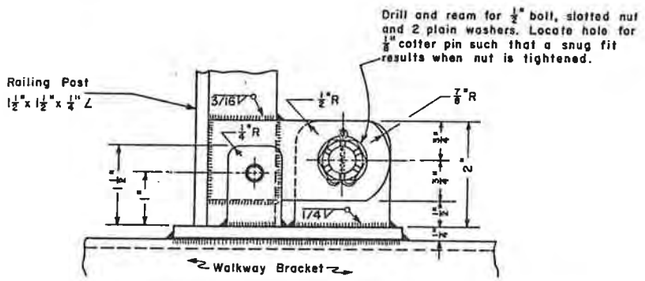

ELEVATION

TYPICAL INTERIOR HINGE

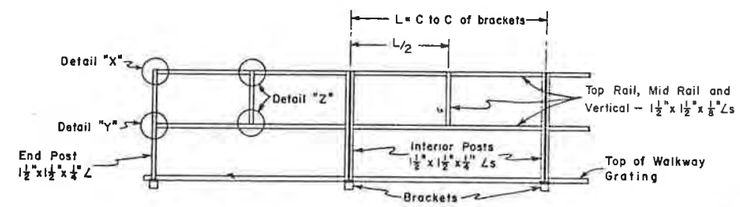

TYPICAL SAFETY RAILING ELEVATION AND DETAILS

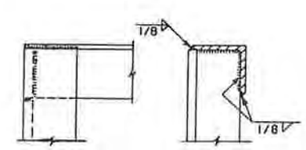

DETAIL "X"

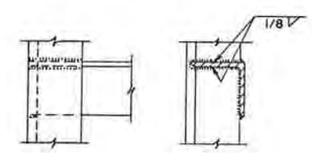

DETAIL "Y"

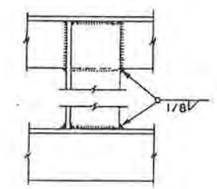

DETAIL "Z"

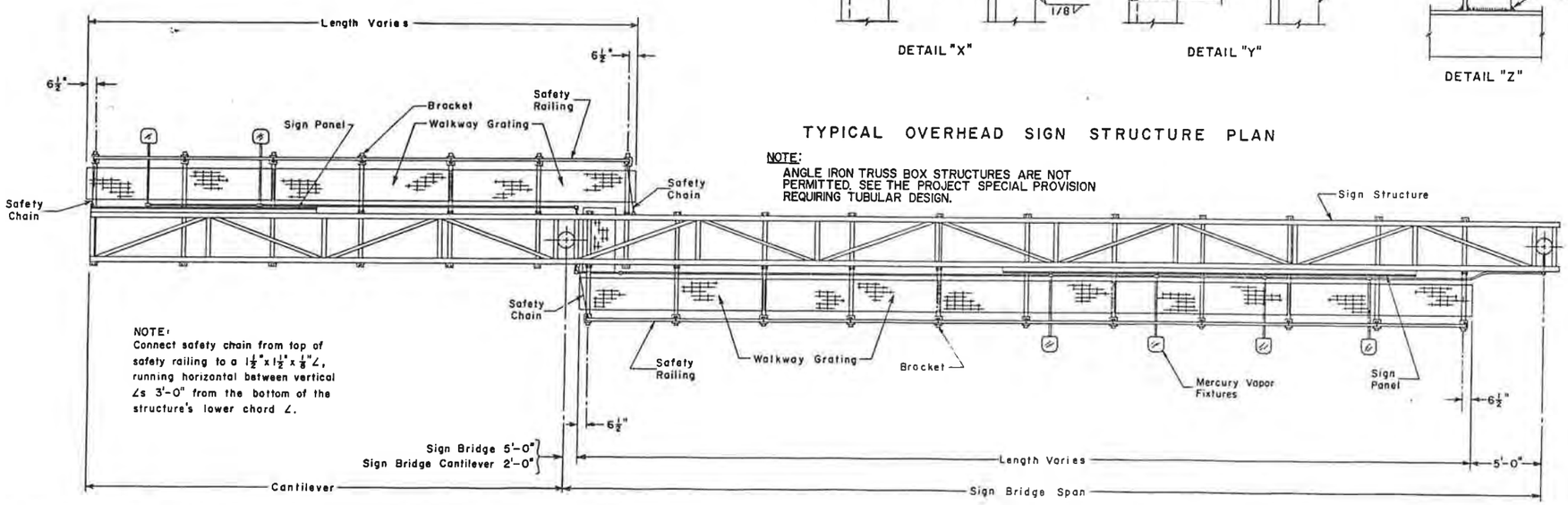

TYPICAL OVERHEAD SIGN STRUCTURE PLAN

NOTE:
ANGLE IRON TRUSS BOX STRUCTURES ARE NOT PERMITTED. SEE THE PROJECT SPECIAL PROVISION REQUIRING TUBULAR DESIGN.

NOTE:
Connect safety chain from top of safety railing to a 1 1/2" x 1 1/2" x 1/8" ∠, running horizontal between vertical ∠s 3'-0" from the bottom of the structure's lower chord ∠.

DEPARTMENT OF HIGHWAYS
STATE OF COLORADO
DIVISION OF HIGHWAYS

LIGHT FIXTURE AND SAFETY WALKWAY DETAILS

AS CONSTRUCTED						
NO REVISIONS		REVISED		VOID		

FED. ROAD REGION	DIVISION	PROJ. NO.	SHEET NO.	SHEET TOTALS
VIII	COLO.	IR25-2(208)	83	

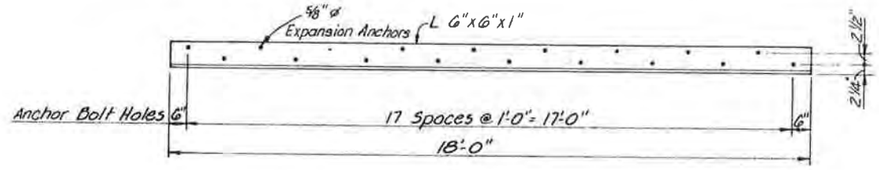

DETAIL I

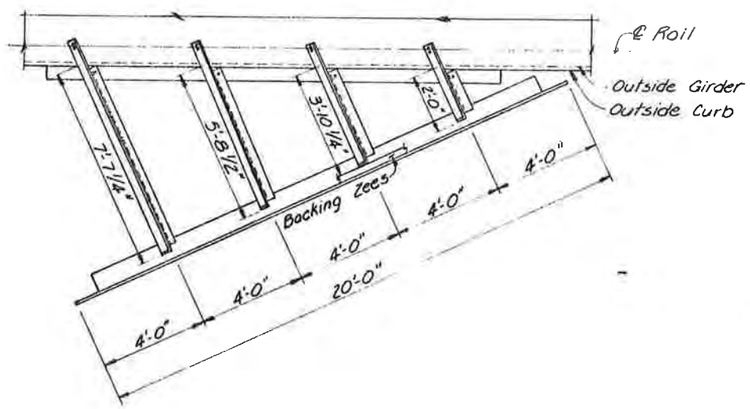

PLAN

Center Over I-25 Median
Adjust Slightly To Avoid Rail Posts

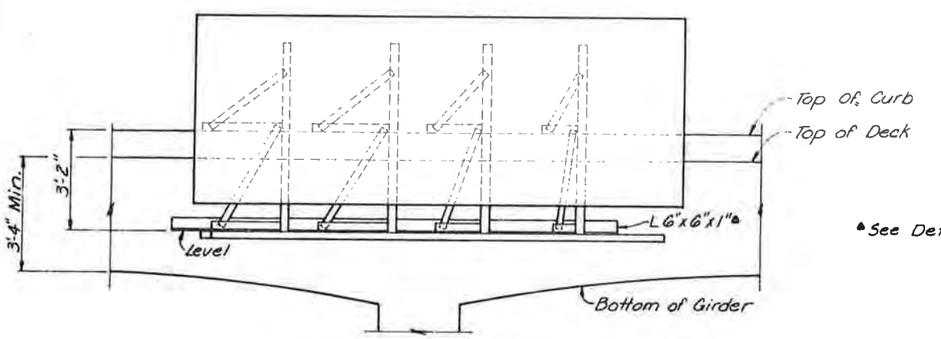

ELEVATION

▲See Detail I

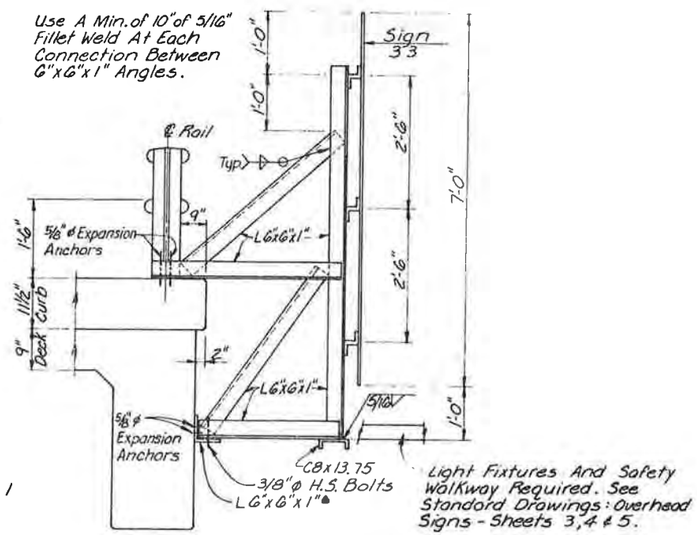

FRAME DETAIL

NOTES:

1. All Work Necessary to Mount Brackets Shall Be Paid As Item 614: Overpass Mounted Sign Bracket.
2. Applicable Specifications And Project Special Provisions Apply to This Work.
3. Contractor Shall Account For Dead Load Deflections And Construct Signs Level And Plumb.
4. All Structure Steel Shall Be ASTM 588.

BRACKET FOR SIGN 33

OVERPASS MOUNTED SIGN BRACKET DETAILS

STATE OF COLORADO
STATE DEPARTMENT OF HIGHWAYS
DIVISION OF HIGHWAYS:
D. O. H. FORM NO.126:
REV. FEB. 1984

AS CONSTRUCTED		
NO REVISIONS	REVISED	VOID

FED.ROAD REGION	DIVISION	PROJ. NO.	SHEET NO.	SHEET TOTALS
VIII	COLO.	IR 25-2 (208)	84	

REVISIONS		

GENERAL NOTES

ALL WORK SHALL BE DONE ACCORDING TO THE STANDARD SPECIFICATIONS OF THE DIVISION OF HIGHWAYS, STATE OF COLORADO, APPLICABLE TO THE PROJECT.

STRUCTURE EXCAVATION AND BACKFILL SHALL BE IN ACCORDANCE WITH STANDARD M-206-1.

EXPANSION JOINT MATERIAL SHALL MEET AASHTO SPECIFICATION M-213.

ALL STRUCTURAL STEEL SHALL BE AASHTO M-183 (ASTM A-36) UNLESS OTHERWISE NOTED.

CLASS 1 FINISH, FOLLOWED BY APPLICATION OF A COLORED ACRYLIC COATING WILL BE REQUIRED ON ALL EXPOSED CONCRETE AND DOWN TO 1'-0" BELOW GROUND LINE. REQUIREMENTS FOR COATING ARE GIVEN IN REVISION OF SECTION 601, STRUCTURAL CONCRETE (COATING).

ALL EXTERIOR CONCRETE CORNERS SHALL BE CONSTRUCTED WITH 3/4" CHAMFERS, UNLESS OTHERWISE NOTED.

GRADE 60 REINFORCING STEEL IS REQUIRED FOR #4 BARS AND LARGER. ALL REINFORCING STEEL SHALL BE EPOXY COATED UNLESS NOTED OTHERWISE.

THE FOLLOWING TABLE GIVES THE MINIMUM LAP SPLICE LENGTH FOR REINFORCING BARS:

BAR SIZE	#4	#5	#6	#7	#8	#9	#10	#11
SPLICE LENGTH FOR CLASS B CONCRETE	1'-0"	1'-3"	1'-8"	2'-3"	3'-0"	3'-10"	4'-10"	5'-11"

ANY SPLICES NOT SHOWN SHALL BE APPROVED BY THE ENGINEER.

APPLIED WIND LOADS AND EARTHQUAKE LOADS WERE NOT CONSIDERED IN ANALYZING THE STRUCTURE FOR STABILITY.

E.F. = EACH FACE
F.F. = FAR FACE
N.F. = NEAR FACE
T.F. = TOP FACE
B.F. = BOTTOM FACE

THE INFORMATION SHOWN ON THESE PLANS CONCERNING TYPE AND LOCATION OF UNDERGROUND UTILITIES IS NOT GUARANTEED TO BE ACCURATE OR ALL INCLUSIVE. THE CONTRACTOR IS RESPONSIBLE FOR MAKING HIS OWN DETERMINATION AS TO THE TYPE AND LOCATION OF UNDERGROUND UTILITIES AS MAY BE NECESSARY TO AVOID DAMAGE TO THEM.

DESIGN DATA

CURRENT AASHTO SPECIFICATIONS, EXCEPT AS NOTED.

LIVE LOAD: AASHTO HS-20-44 AND INTERSTATE ALTERNATE
DEAD LOAD: EARTH - 120 LBS. PER CU.FT., 3' SURCHARGE (LIVE LOAD)
EQUIVALENT FLUID PRESSURE (DESIGN): SEE DETAILS

REINFORCED CONCRETE:

CLASS B CONCRETE: FC = 1,200 PSI, N = 9

REINFORCING STEEL: #4 BARS AND LARGER: FS = 24,000 psi

SUMMARY OF QUANTITIES

	ITEM	DESCRIPTION	UNIT	WALL "G1"	WALL "G2"	WALL "G3"	WALL "G4"	TOTALS
	206	Structure Excavation	Cu. Yd.	79	156	672	600	1507
	206	Structure Backfill (Class 1)	Cu. Yd.	62	123	516	370	1071
	206	Filter Material (Class B)	Cu. Yd.	4	8	28	11	51
	513	Drain Pipe (3 Inch)	Lin. Ft.	1	3	13	13	30
	518	Water Stop (6 Inch)	Lin. Ft.	—	8	36	29	73
①	601	Concrete Class B (Wall)	Cu. Yd.	21.6	45.4	160.0	125.0	352
②	602	Reinforcing Steel (Epoxy Coated)	Lb.	1,930	4,365	15,545	12,160	34,000
	606	Bridge Rail Type 4	Lin. Ft.	30	65	300	300	695

① INCLUDES 1 CU. YD. FOR LIGHT STANDARD PEDESTAL AT WALLS "G3" & "G4".
② INCLUDES 149 LBS. FOR LIGHT STANDARD PEDESTAL AT WALLS "G3" & "G4".
QUANTITY FOR 2" ELECTRICAL CONDUIT ON LIGHTING TABS, DWG. NO. B-56.

INDEX OF DRAWINGS

B-1 GENERAL INFORMATION - SUMMARY OF QUANTITIES
B-2 ENGINEERING GEOLOGY
B-3 GENERAL LAYOUT - RETAINING WALL G1 & G2
B-4 GENERAL LAYOUT - RETAINING WALL G3
B-5 GENERAL LAYOUT - RETAINING WALL G4
B-6 RETAINING WALL DETAILS TYPE 2-A
B-7 RETAINING WALL DETAILS - MISCELLANEOUS

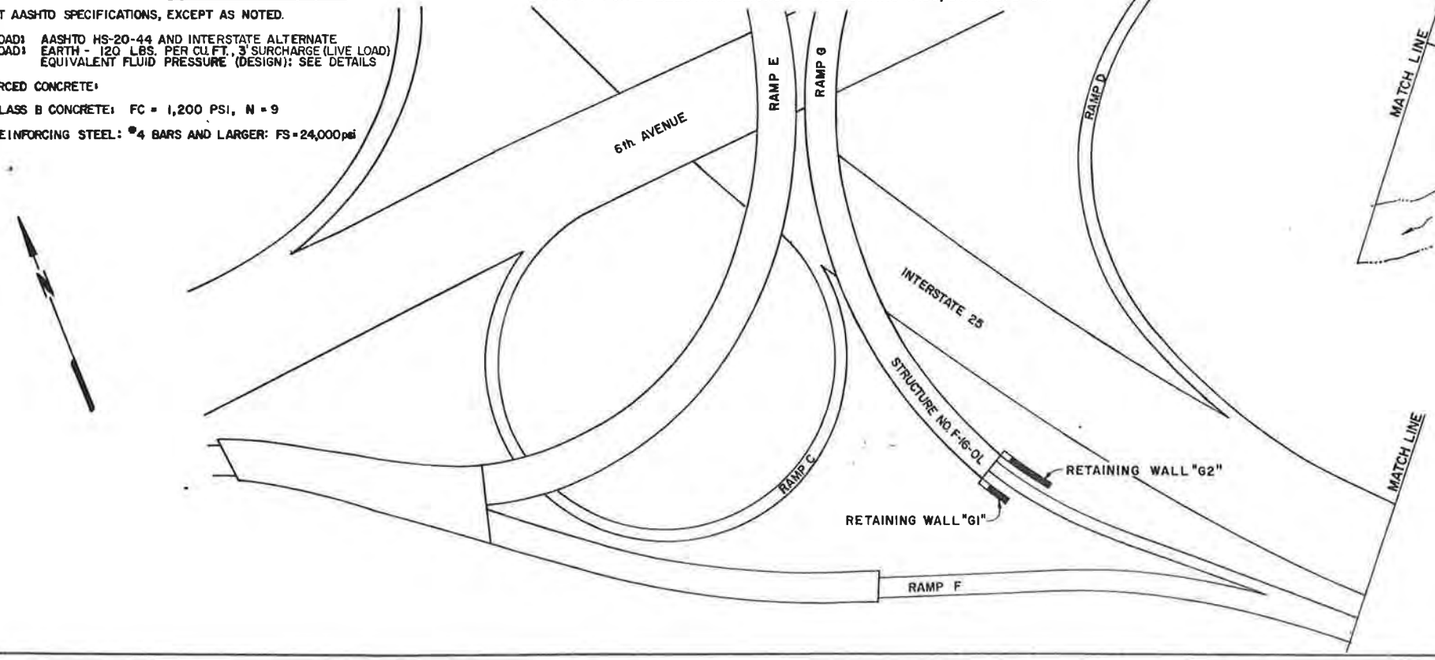

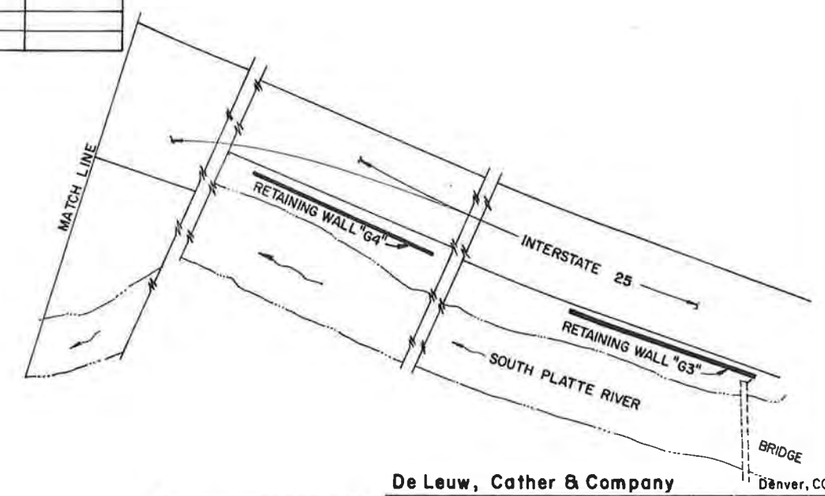

De Leuw, Cather & Company
Denver, CO.

COLORADO REGISTERED PROFESSIONAL ENGINEER
JEFFREY L. STANGESTON
19560

Reviewed
A. J. Ricciardi 6/27/85
BRIDGE ENGINEER DATE

DIVISION OF HIGHWAYS

GENERAL INFORMATION
SUMMARY OF QUANTITIES

RETAINING WALLS

Designer S.S. Jaing
Detailer R. Hinshaw
Structure Numbers
Drawing Number B-1 of 7 Drawings

Revision Dates (Preliminary Stage Only)

INITIAL			
DESIGNED BY	SSJ	CHECKED BY	BAA 2-88
CHECKED BY	BAA	QUANTITIES BY	SSJ 10-87
DETAILED BY	RMH	CHECKED BY	BAA 2-88

AS CONSTRUCTED		
NO REVISIONS	REVISED	VOID

FED. ROAD REG. NO	DIVISION	PROJECT NO.	SHEET NO.	TOTAL SHEETS
VIII	COLORADO	IR25-2(208)	85	

REVISIONS

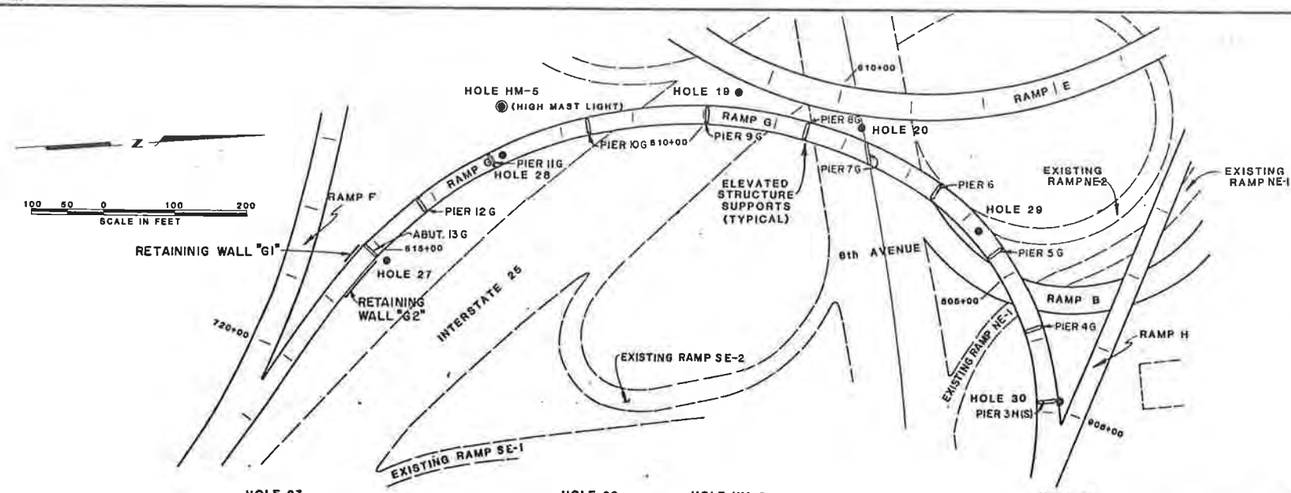

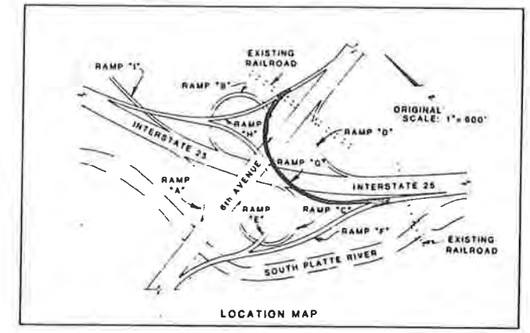

LOCATION MAP

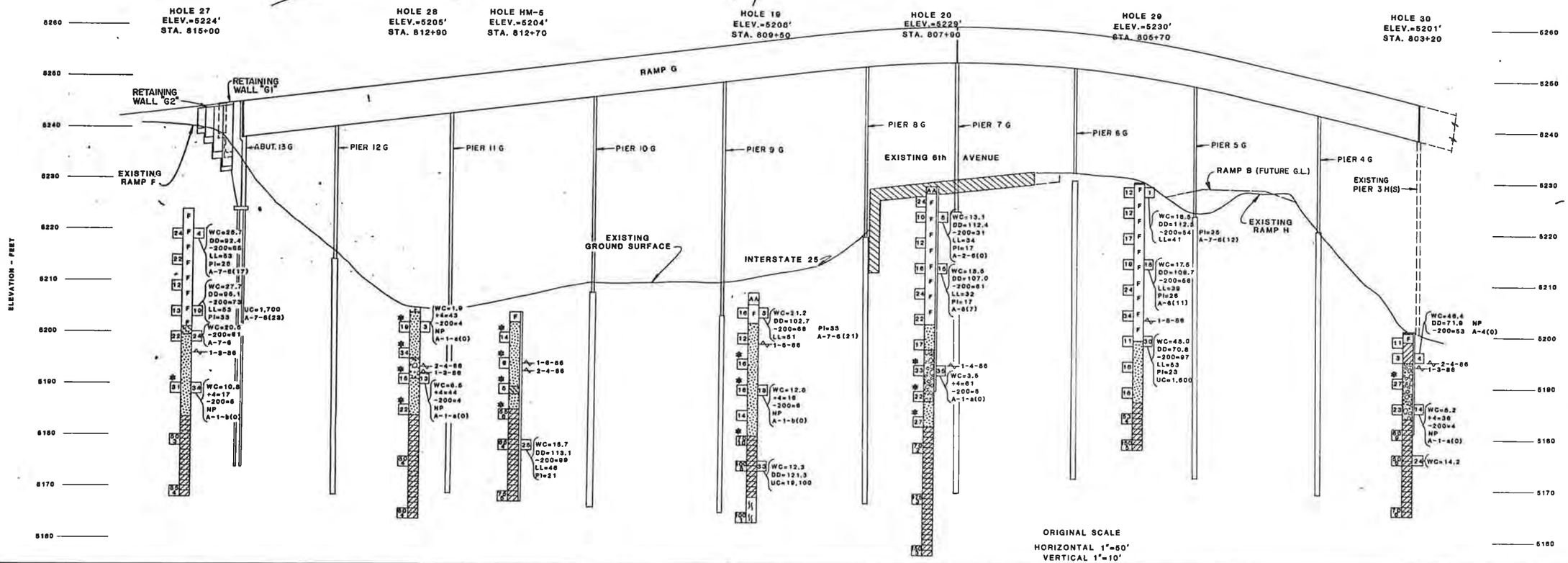

ORIGINAL SCALE
HORIZONTAL 1"=50'
VERTICAL 1"=10'

SUMMARY OF TEST RESULTS

Sample No.	Depth	Classification: Coarse of Engr or Visual	Classification: AASHTO	Grading Analysis (Percent): Gravel	Coarse Sand	Fine Sand	Silt and Clay	Atterberg Limits: Liquid Limit W_{LL}	Plastic Limit W_{PL}	Plastic Index I_P	Water Cont. W %	Wet Unit Weight γ P.C.F.	Unconfined Strength Q_u T.S.F.	Triaxial Shear Strength: φ	C P.S.I.	Dia. of Sample Inches

TYPE OF MATERIAL

- TOPSOIL
- AA ASPHALT
- F FILL, GRAVELLY SAND TO SANDY CLAY, MOIST, BROWN, ESTIMATED SOME TRASH CONSISTING OF RAGS, WOOD AND METAL IN HOLE 27 AT 11' TO 15'.
- SAND (SP) CLEAN TO SLIGHTLY SILTY, LOOSE TO DENSE, MOIST TO WET, BROWN.
- SAND (SC) CLAYEY TO SILTY, LOOSE TO MEDIUM DENSE, MOIST, BROWN.
- SAND AND GRAVEL (SP-GP) CLEAN TO SILTY, MEDIUM DENSE TO DENSE, MOIST TO WET, BROWN.
- CLAY (CL) SLIGHTLY SANDY TO SANDY, MEDIUM TO STIFF, MOIST, BROWN.
- CLAYSTONE BEDROCK, HARD TO VERY HARD, MOIST, BROWN TO BLUE-GRAY.
- SS SANDSTONE BEDROCK, VERY HARD, MOIST, BROWN TO BLUE-GRAY.

LEGEND

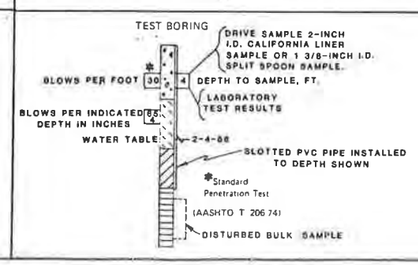

LABORATORY TEST RESULTS:

WC=MOISTURE CONTENT, %
DD=DRY DENSITY, pcf
+4=PERCENTAGE RETAINED ON NO. 4 SIEVE
-200=% PASSING NO. 200 SIEVE
LL=LIQUID LIMIT, %
PI=PLASTICITY INDEX, %
NP=NON-PLASTIC
UC=UNCONFINED COMPRESSIVE STRENGTH, pcf
SPD=MAXIMUM STANDARD PROCTOR DENSITY, pcf
OM=OPTIMUM MOISTURE CONTENT, %
R=HVEEM STABILOMETER RESISTANCE VALUE
A-1-b(0)=AASHTO CLASSIFICATION (GROUP INDEX)

○ HIGH MAST LIGHTING

DIVISION OF HIGHWAYS
CHEN & ASSOCIATES, INC.
ENGINEERING GEOLOGY
RAMP G
6th AVENUE/INTERSTATE 25 INTERCHANGE

Geologist
Drawn by A.S.
Checked by R.J.T.
Date February, 1986

STRUCTURE NO. F-16-OL
DWG. NO. 8-2 OF 7

STATE OF COLORADO
STATE DEPARTMENT OF HIGHWAYS
DIVISION OF HIGHWAYS:
D. O. H. FORM NO. 126:
REV. FEB. 1984

AS CONSTRUCTED		
NO REVISIONS	REVISED	VOID

FED. ROAD REGION	DIVISION	PROJ. NO.	SHEET NO.	SHEET TOTALS
VIII	COLO.	IR 25-2(208)	86	

REVISIONS		

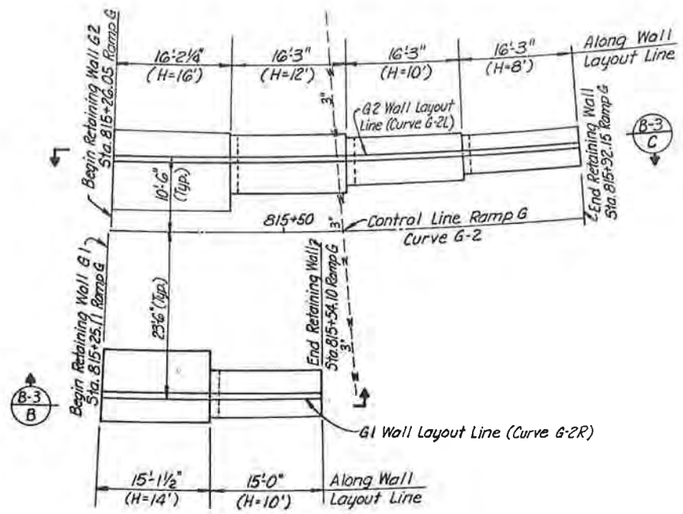

PLAN

CURVE DATA			
CURVE	G-2	G-2R	G-2L
Δ	83°40'08" Lt.	2°46'05" Lt.	6°18'42" Lt.
D	9°32'58"	9°11'21.8"	9°43'09.8"
R	600.00'	623.50'	589.50'
L	876.18'	30.12'	64.94'
T	537.11'	15.06'	32.50'

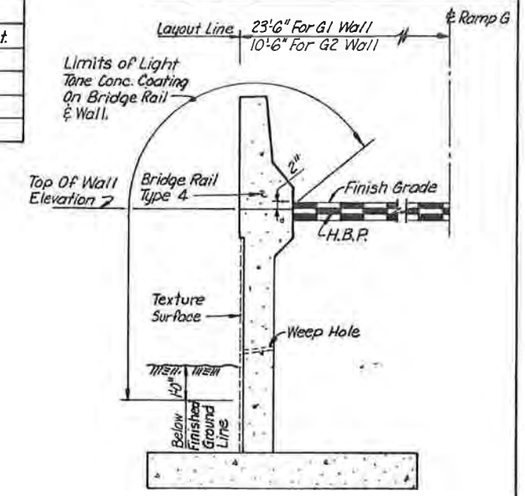

SECTION B-3 A

NOTES:

1. For Bridge Rail Type 4 Details, See Dwg. No. B-4b of 58.
2. See Dwg. No. B-6 & B-7 For Additional Details.
3. Top of Wall Elevation Is 2" Below Finished Grade (Roadway).

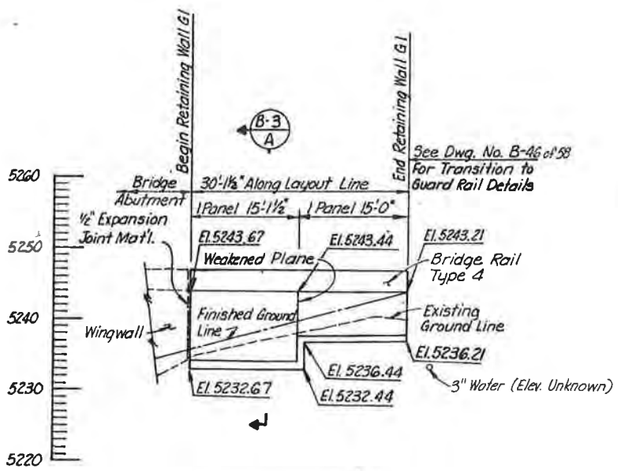

RETAINING WALL G1

SECTION B-3 B

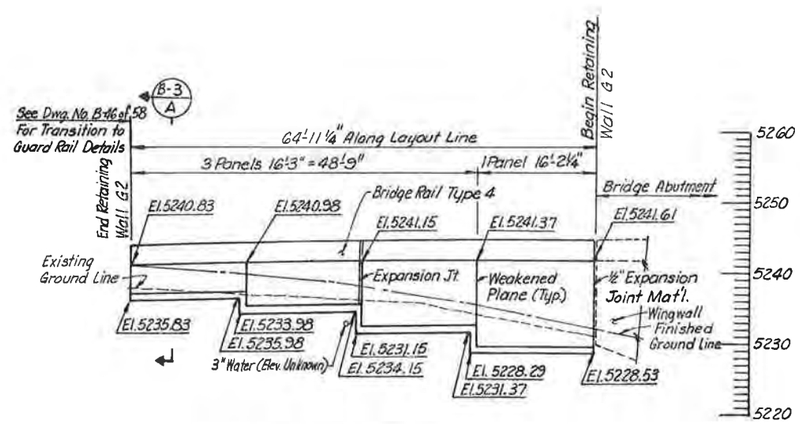

RETAINING WALL G2

SECTION B-3 C

	WITIAL	DATE	CHECKED BY
DESIGNED BY	S.S.J.	10-87	
CHECKED BY	B.A.A.	1-88	
DETAILED BY	R.M.H.	10-87	

De Leuw, Cather & Company — Denver, CO.

DIVISION OF HIGHWAYS

GENERAL LAYOUT RETAINING WALL

(G1)

STA. 815+25.11 TO STA. 815+54.10 RAMP G

(G2)

STA. 815+26.05 TO STA 815+92.15 RAMP G

Designer S.S. Jiang	Structure Numbers	F-16-OL
Detailer R. Hinshaw		
Drawing Number B-3	of 7	Drawings

Revision Dates (Preliminary Stage Only)

STATE OF COLORADO
STATE DEPARTMENT OF HIGHWAYS
DIVISION OF HIGHWAYS:
D. O. H. FORM NO. 1267
REV. FEB. 1964

AS CONSTRUCTED		
NO REVISIONS	REVISED	VOID

FED. ROAD REGION	DIVISION	PROJ. NO.	SHEET NO.	SHEET TOTALS
VIII	COLO.	IR 25-2(208)	87	

REVISIONS		

CURVE DATA		
CURVE	RCL.-3	G-3R
Δ	9°54'00" Lt.	1°06'32" Lt.
D	1°45'00"	1°04'30"
R	3274.24'	5330.00'
L	565.75'	103.14'
T	283.58'	51.57

COORDINATE DATA CURVE G-3R		
	NORTH	EAST
P.C.	686,986.655	2,139,352.768
P.I.	686,952.169	2,139,391.115
C.C.	690,949.756	2,142,916.856
P.T.	686,918.431	2,139,430.122

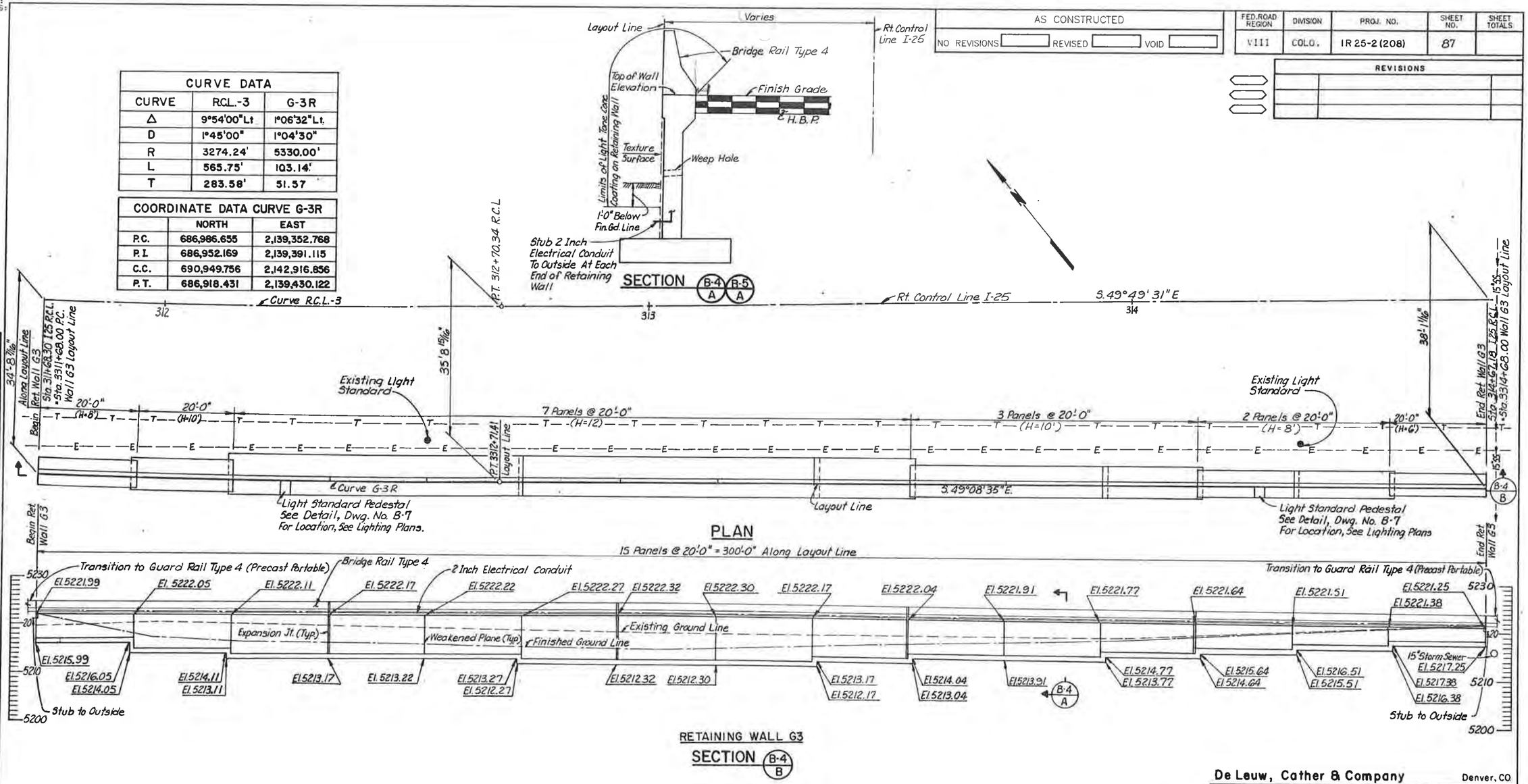

	INITIAL	DATE
DESIGNED BY	B.A.A.	2-83
CHECKED BY	L.L.S.	2-83
DETAILED BY	R.M.H.	2-83
CHECKED BY	J.L.S.	2-88

NOTES:
1. See Dwgs. B-6 And B-7 For Additional Details.
2. Utility Locations Are Approximate. See Utility Plans And Sections For Location And Elevation.

De Leuw, Cather & Company — Denver, CO

DIVISION OF HIGHWAYS

GENERAL LAYOUT
RETAINING WALL
(G3)
STA. 311+68.30 TO STA. 314+67.18 I-25 R.C.L.

Designer B. Arrighi	Structure Numbers
Detailer R. Hinshaw	
Drawing Number B-4 of 7 Drawings	

Revision Dates (Preliminary Stage Only)

STATE OF COLORADO
STATE DEPARTMENT OF HIGHWAYS
DIVISION OF HIGHWAYS:
D. O. H. FORM NO. 1261
REV. FEB. 1984

AS CONSTRUCTED		
NO REVISIONS	REVISED	VOID

FED. ROAD REGION	DIVISION	PROJ. NO.	SHEET NO.	SHEET TOTALS
VIII	COLO.	IR 25-2(208)	88	

REVISIONS		

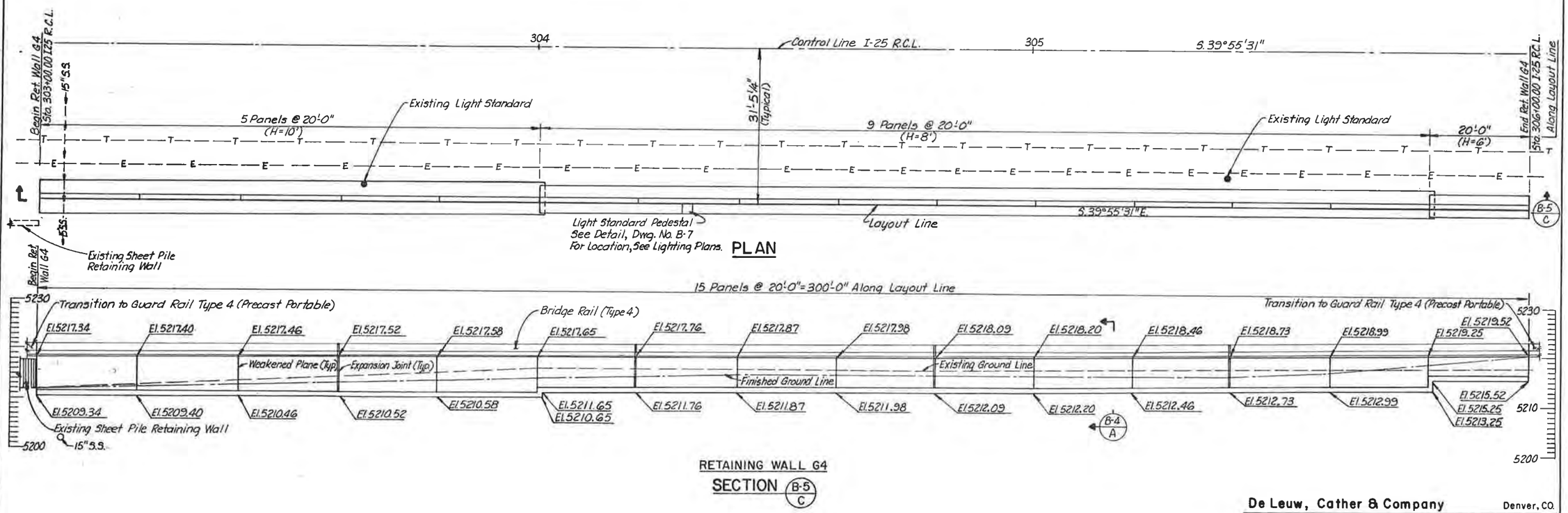

RETAINING WALL G4
SECTION B-5 / C

	INITIAL	DATE	CHECKED BY
DESIGNED BY	B.A.A.	3-88	
CHECKED BY	J.L.S.	3-88	
DETAILED BY	R.M.H.	5-88	

NOTES:
1. See Dwgs. B-6 And B-7 For Additional Details.
2. Utility Locations Are Approximate. See Utility Plans And Sections For Location And Elevation.

De Leuw, Cather & Company — Denver, CO.

DIVISION OF HIGHWAYS

GENERAL LAYOUT
RETAINING WALL
(G4)
STA. 303+00.00 TO STA. 306+00.00 I-25 R.C.L.

Designer B. Arrighi	Structure Numbers
Detailer R. Hinshaw	
Drawing Number B-5 of 7 Drawings	

Revision Dates (Preliminary Stage Only)

AS CONSTRUCTED		
NO REVISIONS	REVISED	VOID

FEDERAL ROAD REGION NO.	DIVISION	PROJ. NO.	SHEET NO.	TOTAL SHEETS
VIII	COLORADO	IR25-2(208)	89	

REVISIONS		

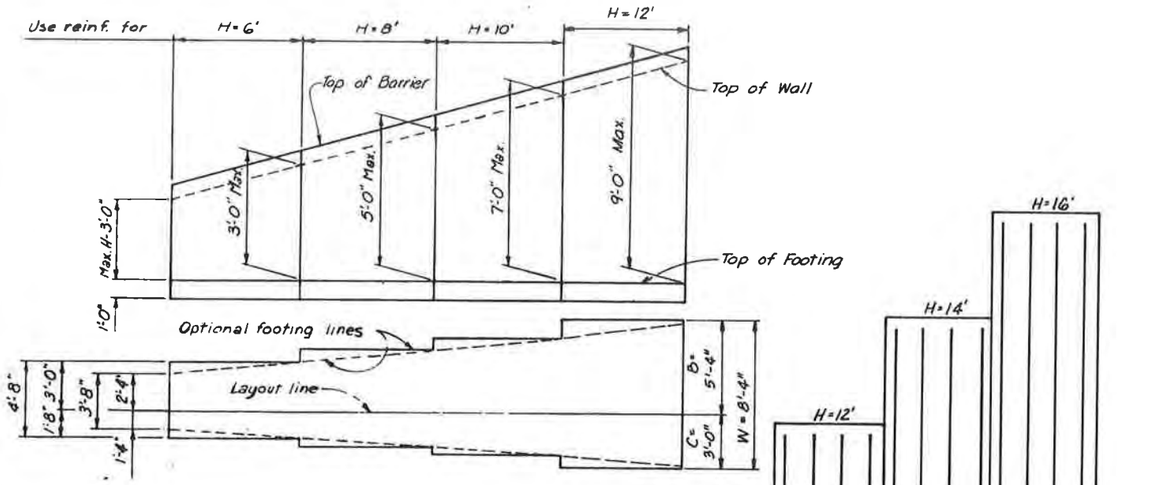

TYPICAL LAYOUT EXAMPLE

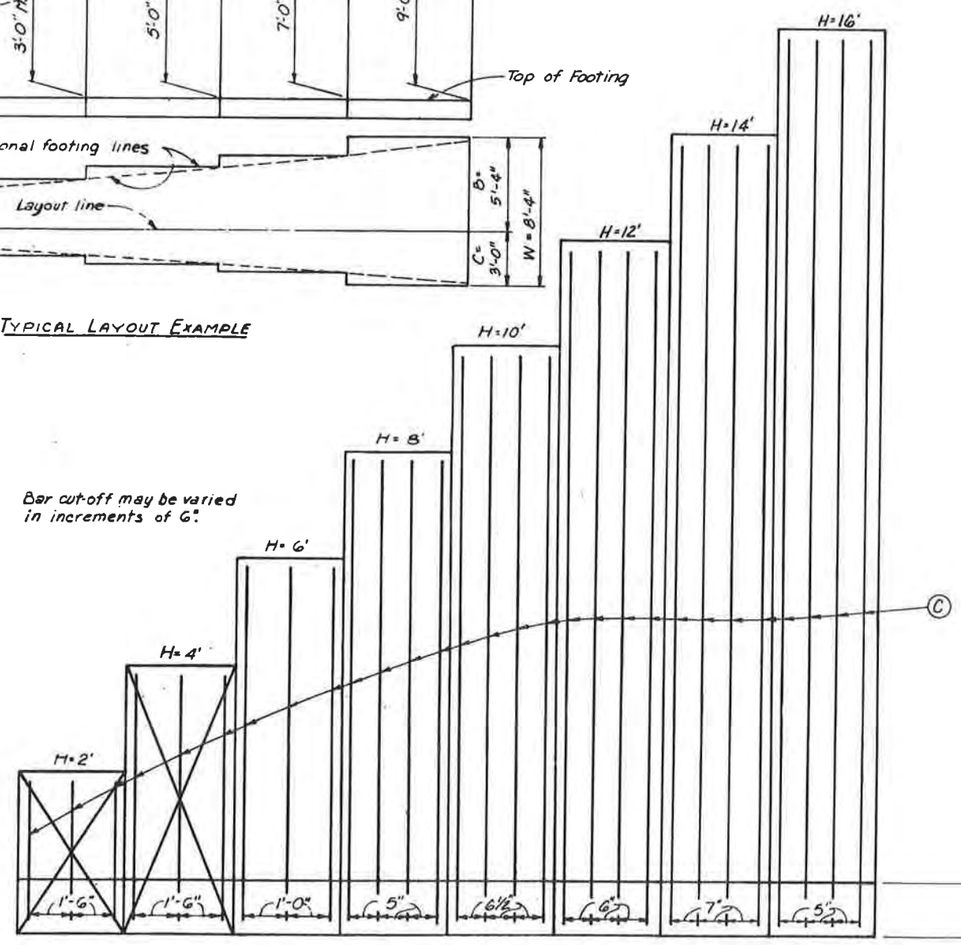

ELEVATION

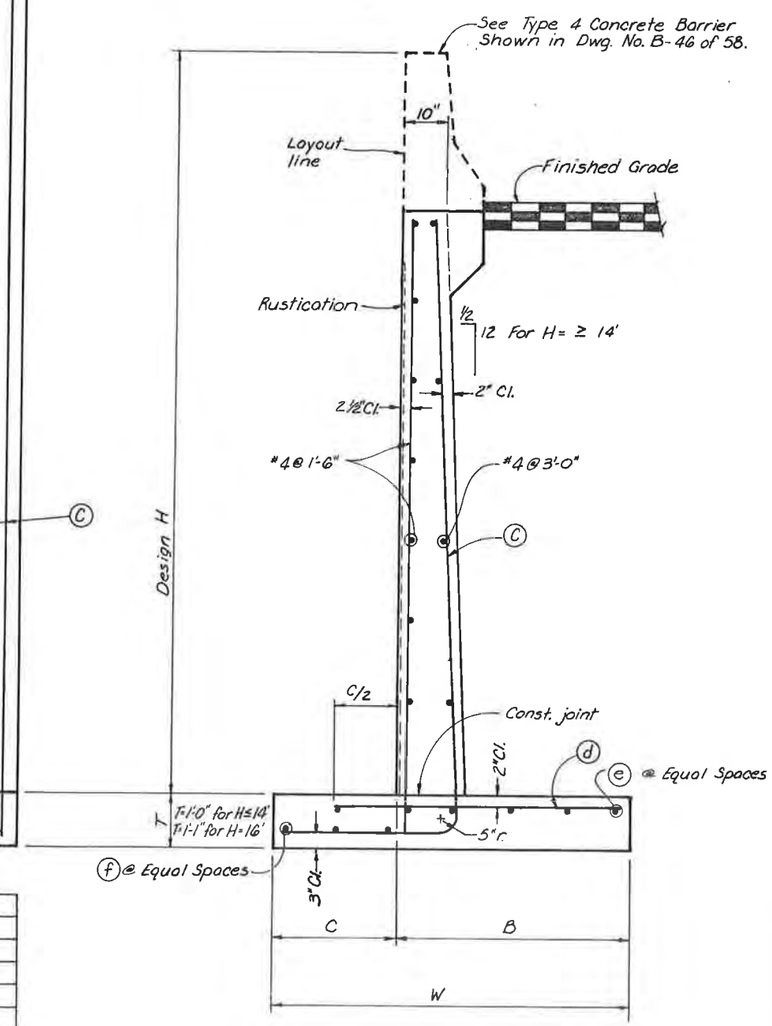

TYPICAL SECTION

NOTES:

1. for Other Details See Dwg. No. B-7.

DESIGN DATA

CURRENT AASHTO SPECIFICATION (1983)

WORKING STRESS DESIGN

REINFORCING STEEL: f_s = 24,000 psi f_y = 60,000 psi

REINFORCED CONCRETE: f_c = 1200 psi f'_c = 3000 psi n = 9
(CONC. CLASS B (WALL))

LOADINGS:

LIVE LOAD = 3' SURCHARGE

EARTH : 36 pcf EQUIVALENT FLUID PRESSURE
120 pcf DRY WEIGHT
COEFFICIENT OF FRICTION (μ) = 0.45

ALLOWABLE SOIL BEARING PRESSURE IS 1 TON / SQ.FT.

TYPE 2-A RETAINING WALL DESIGN DATA

H	2'	4'	6'	8'	10'	12'	14'	16'
C	1'-0"	1'-4"	1'-8"	2'-4"	2'-8"	3'-0"	3'-4"	3'-8"
B	1'-8"	2'-4"	3'-0"	3'-4"	4'-0"	5'-4"	6'-9"	7'-10"
W	2'-8"	3'-8"	4'-8"	5'-8"	6'-8"	8'-4"	10'-1"	11'-6"
ⓒ bars	—	—	#5@6"	#5@5"	#6@6½"	#6@6"	#6@7"	#6@5"
ⓓ bars	—	—	#4@8"	#4@8"	#4@8"	#4@8"	#4@5"	#5@5½"
ⓔ bars	—	—	#4 (tot.4)	#4 (tot.4)	#4 (tot.5)	#4 (tot.6)	#4 (tot.7)	#4 (tot.8)
ⓕ bars	—	—	#4 (tot.3)	#4 (tot.3)	#4 (tot.3)	#4 (tot.3)	#4 (tot.4)	#4 (tot.4)
Reinf. Lbs/L.F.	—	—	26	38	51	65	76	112
Conc. Cu.Yd./L.F.	—	—	0.285	0.397	0.495	0.619	0.830	1.015

DIVISION OF HIGHWAYS

RETAINING WALL DETAILS

Designer S.S. Jiang		Structure Numbers	
Detailer D. Kurschinski			
Drawing Number B-6	of 7	Drawings	

(11-1-79)

Revision Dates (Preliminary Stage Only)

101

AS CONSTRUCTED		
NO REVISIONS	REVISED	VOID

FEDERAL ROAD ADMIN. NO.	DIVISION	PROJ. NO.	SHEET NO.	TOTAL SHEETS
XXX	COLORADO	IR25-2(208)	90	

REVISIONS		

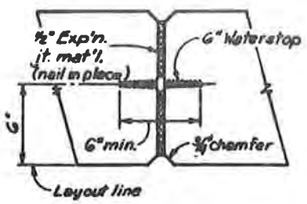

EXPANSION JOINT

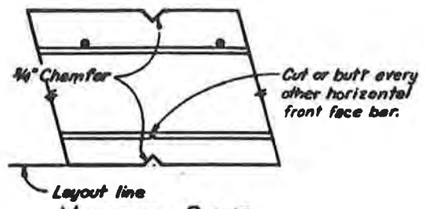

WEAKENED PLANE
(@ 22'-0" Max.)

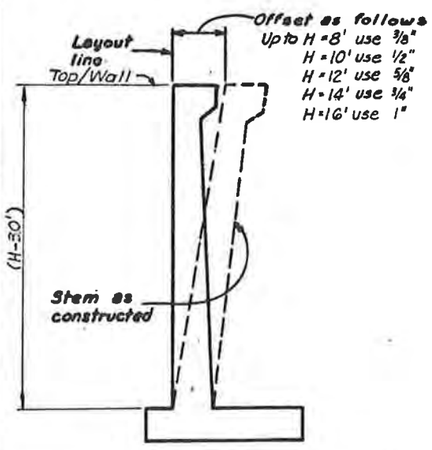

APPROX. WALL OFFSETS

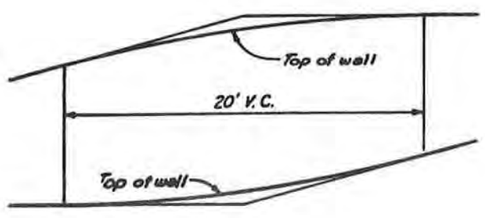

20' V.C. AT TOP OF WALL SLOPE CHANGE

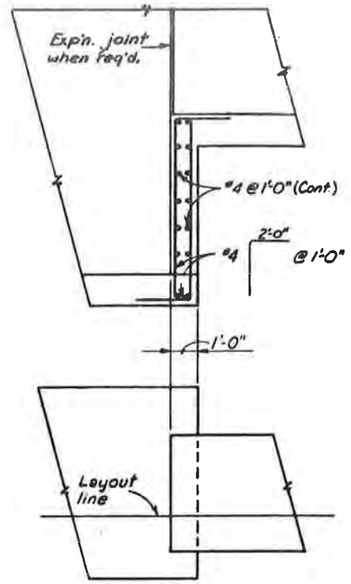

FOOTING STEP

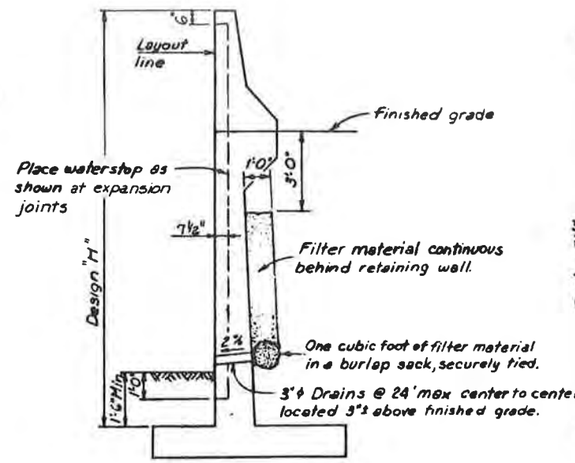

DESIGN AND DRAINAGE

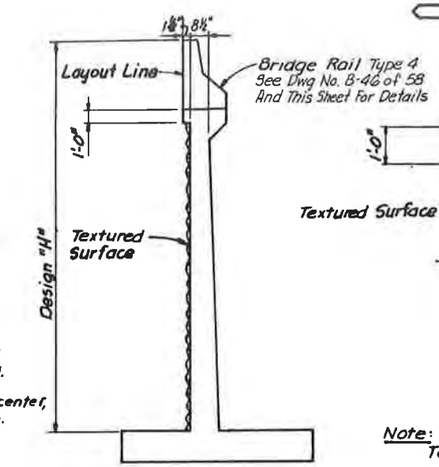

Textured RUSTICATION

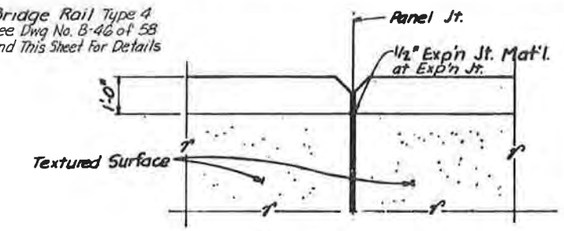

FRONT FACE OF WALL

Note:
Textured Surface shall conform to the surface as Detailed Below, or As Approved By The Engineer.

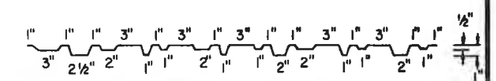

TEXTURED SURFACE DETAIL

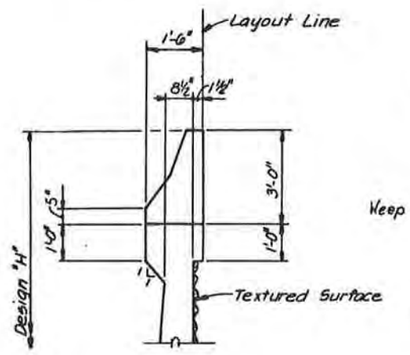

Type 4 Concrete Barrier

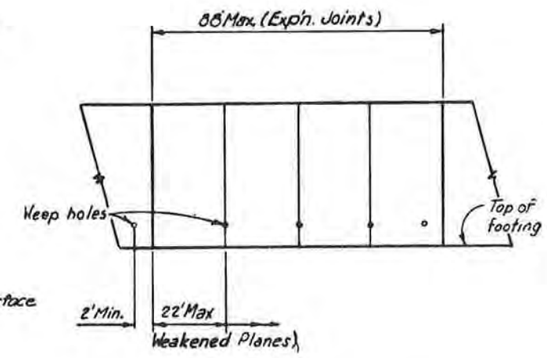

WALL EXPANSION JOINTS AND WEAKENED PLANES

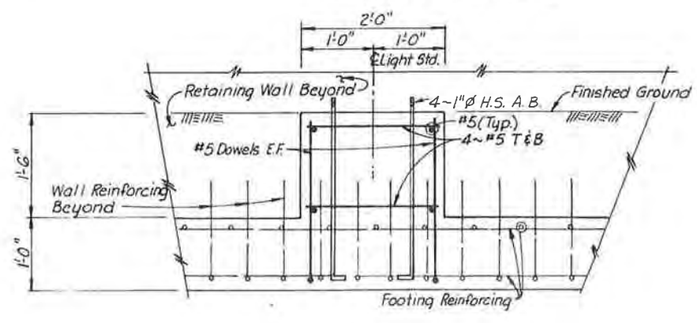

SECTION A/B-7

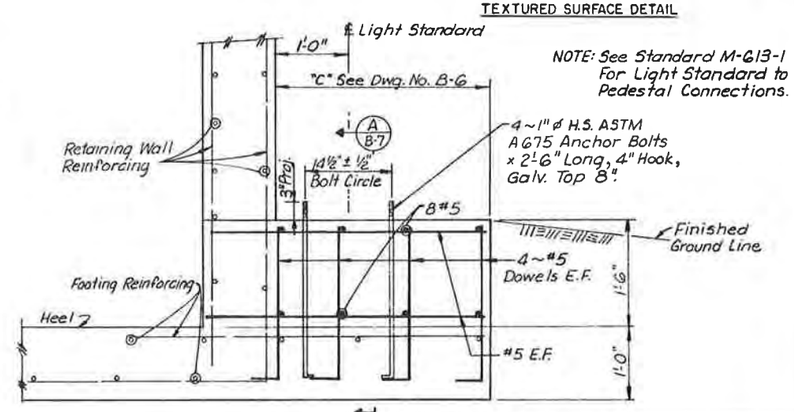

NOTE: See Standard M-613-1 For Light Standard to Pedestal Connections.

LIGHT STANDARD PEDESTAL DETAIL

DIVISION OF HIGHWAYS

RETAINING WALL DETAILS
MISCELLANEOUS

Designer R. Koester		Structure Numbers	
Detailer R. Hinshaw			
Drawing Number B-7	of 7		Drawings

(11-1-79)

Revision Dates (Preliminary Stage Only)

STATE OF COLORADO
STATE DEPARTMENT OF HIGHWAYS
DIVISION OF HIGHWAYS
D. O. H. FORM NO. 1261
REV. FEB. 1984

GENERAL NOTES

ALL WORK SHALL BE DONE ACCORDING TO THE STANDARD SPECIFICATIONS OF THE DIVISION OF HIGHWAYS, STATE OF COLORADO, APPLICABLE TO THE PROJECT.

STRUCTURE EXCAVATION AND BACKFILL SHALL BE IN ACCORDANCE WITH STANDARD M-206-2.

EXPANSION JOINT MATERIAL SHALL MEET AASHTO SPECIFICATION M-213.

ALL STRUCTURAL STEEL SHALL BE AASHTO M-222 (ASTM A-588, CORROSION RESISTANT), UNLESS OTHERWISE NOTED. REQUIREMENTS FOR PAINTING STEEL ARE GIVEN IN REVISION OF SECTION 509, STRUCTURAL STEEL PAINTING. INSIDE OF BOX GIRDERS SHALL RECEIVE ONE SHOP COAT OF PAINT. EXPOSED SURFACES SHALL BE PAINTED AS PER SPECIFICATIONS.

FOLLOWING MEMBERS SHALL BE FRACTURE CRITICAL: ALL STRUCTURAL ELEMENTS USING AASHTO M-222 (ASTM A-588) STEEL AND ANY MEMBER INDICATED AS FCM IN THESE DRAWINGS.

ALL BOLTS SHALL BE AASHTO M-164 (ASTM A-325), 7/8 INCH DIAMETER, HIGH STRENGTH, TYPE 3, UNLESS OTHERWISE NOTED.

NO FIELD WELDING OF ANY KIND SHALL BE PERMITTED ON THE FLANGES OF STEEL GIRDERS UNLESS SPECIFICALLY CALLED FOR ON THE PLANS. SHOP WELDING FOR SPLICES OF FLANGES AND WEBS, AS DETAILED ON THE PLANS, SHALL BE PERMITTED. SHOP DRAWINGS SHALL SHOW LOCATION AND DETAILS OF ALL SHOP SPLICES.

CLASS I FINISH, FOLLOWED BY APPLICATION OF A COLORED ACRYLIC COATING, WILL BE REQUIRED ON ALL EXPOSED CONCRETE SURFACES DOWN TO 1'-0" BELOW GROUND LINE. REQUIREMENTS FOR COATING ARE GIVEN IN REVISION OF SECTION 601, STRUCTURAL CONCRETE (COATING).

ALL EXTERIOR CONCRETE CORNERS SHALL BE CONSTRUCTED WITH 3/4" CHAMFERS, UNLESS OTHERWISE NOTED.

GRADE 60 REINFORCING STEEL IS REQUIRED FOR #4 BARS AND LARGER. ALL REINFORCING STEEL SHALL BE EPOXY COATED, UNLESS NOTED OTHERWISE.

THE FOLLOWING TABLE GIVES THE MINIMUM LAP SPLICE LENGTH FOR REINFORCING BARS:

BAR SIZE	#4	#5	#6	#7	#8	#9	#10	#11
SPLICE LENGTH FOR CLASS B CONCRETE	1'-0"	1'-3"	1'-8"	2'-3"	3'-0"	3'-10"	4'-10"	5'-11"
SPLICE LENGTH FOR CLASS D, BZ & S CONCRETE	1'-0"	1'-3"	1'-6"	2'-0"	2'-7"	3'-4"	4'-2"	5'-1"

THE ABOVE SPLICE LENGTHS SHALL BE INCREASED BY 20 PERCENT FOR 3 BAR BUNDLES AND 33 PERCENT FOR 4 BAR BUNDLES.

ANY REINFORCING STEEL SPLICES NOT SHOWN SHALL BE APPROVED BY THE ENGINEER.

APPLIED WIND LOADS AND EARTHQUAKE LOADS WERE NOT CONSIDERED IN ANALYZING THE STRUCTURE FOR STABILITY DURING THE CONSTRUCTION STAGES.

FOR STRUCTURE NUMBER INSTALLATION, SEE STANDARD S-614-12.

PERMANENT STEEL BRIDGE DECK FORMS SHALL BE USED FOR ALL INTERIOR SLAB SPANS AS SHOWN IN THE TYPICAL SECTIONS. NO STEEL BRIDGE DECK FORMS WILL BE ALLOWED ON THE CANTILEVER PORTIONS OF THE SLAB. FORMS SHALL NOT BE ATTACHED TO THE STEEL GIRDERS BY WELDING.

THE INFORMATION SHOWN ON THESE PLANS CONCERNING TYPE AND LOCATION OF UNDERGROUND UTILITIES IS NOT GUARANTEED TO BE ACCURATE OR ALL INCLUSIVE. THE CONTRACTOR IS RESPONSIBLE FOR MAKING HIS OWN DETERMINATION AS TO THE TYPE AND LOCATION OF UNDERGROUND UTILITIES AS MAY BE NECESSARY TO AVOID DAMAGE TO THEM.

THE FOLLOWING ARE STANDARD ABBREVIATIONS:

E.F. = EACH FACE
F.F. = FAR FACE
N.F. = NEAR FACE
E.W. = EACH WAY
T.F. = TOP FACE
B.F. = BOTTOM FACE
N.C. = NON-EPOXY COATED

DESIGN NOTES

CURRENT AASHTO SPECIFICATIONS:

LIVE LOAD : AASHTO HS-20-44 AND INTERSTATE ALTERNATE
DEAD LOAD : ASSUMES 48 LBS. PER SQ. FT. FOR BITUMINOUS PAVEMENT
ASSUMES 150 LBS. PER SQ. FT. FOR IN-PLACE CONCRETE FORMWORK

REINFORCED CONCRETE:
CLASS B CONCRETE: fc = 1,200 psi, n = 9, f'c = 3,000 psi AT 28 DAYS
CLASS D CONCRETE: fc = 1,800 psi, n = 8, f'c = 4,500 psi AT 28 DAYS

REINFORCING STEEL: #4 BARS AND LARGER: fs = 24,000 psi, fy = 60,000 psi

STRUCTURAL STEEL: AASHTO M-183 (ASTM A-36) fs = 20,000 psi
AASHTO M-222 (ASTM A-588) fs = 27,000 psi

PRESTRESSED CONCRETE:
CLASS S CONCRETE: f'c = 5,500 psi AT 28 DAYS
f'ci = 4,500 psi AT STRESSING

PRESTRESSING STEEL: HIGH STRENGTH ALLOY STEEL BARS CONFORMING TO ASTM A-722, ULTIMATE STRENGTH = 150,000 psi MINIMUM.

DESIGN METHOD:

SUPERSTRUCTURE: SERVICE LOAD DESIGN (WORKING STRESS)
SUBSTRUCTURE: SERVICE LOAD (WORKING STRESS) EXCEPT LOAD FACTOR DESIGN FOR PIER COLUMNS AND CAISSONS.

INDEX OF DRAWINGS

B-1 GENERAL INFORMATION
B-2 SUMMARY OF QUANTITIES
B-3 GENERAL LAYOUT RAMP G - UNIT 1
B-4 GENERAL LAYOUT RAMP G - UNIT 2
B-5 TYPICAL SECTIONS
B-6 ENGINEERING GEOLOGY
B-7 CAISSON AND CONSTRUCTION LAYOUT - UNIT 1 & 2
B-8 CAISSON AND CONSTRUCTION LAYOUT - UNIT 2
B-9 CAISSON DETAILS
B-10 PIER 3H(S) BEARING SEAT DETAILS
B-11 PIERS 4G, 5G, & 6G DETAILS
B-12 PIER 7G DETAILS
B-13 PIER 7G SECTIONS
B-14 PIERS 8G, 9G, 10G, 11G, & 12G DETAILS
B-15 PIER CAP PRESTRESSING - PIERS 4G THRU 6G
B-16 PIER CAP PRESTRESSING - PIERS 8G THRU 12G
B-17 PIER CAP REINFORCEMENT - PIERS 4G THRU 6G AND 8G THRU 12G
B-18 ABUTMENT 13G DETAILS
B-19 ABUTMENT 13G AND WINGWALL DETAILS
B-20 FRAMING PLAN AND GIRDER ELEVATION - UNIT 1
B-21 FRAMING PLAN AND GIRDER ELEVATION - UNIT 1
B-22 FRAMING PLAN AND GIRDER ELEVATION - UNIT 2
B-23 FRAMING PLAN AND GIRDER ELEVATION - UNIT 2
B-24 FRAMING PLAN AND GIRDER ELEVATION - UNIT 2
B-25 FRAMING PLAN AND GIRDER ELEVATION - UNIT 2
B-26 ERECTION PROCEDURE
B-27 BEARING DEVICE (TYPE III) DETAILS
B-28 BEARING DEVICE (TYPE III) DETAILS
B-29 END DIAPHRAGM DETAILS - PIER 3H(S) AND ABUTMENT 13G
B-30 END DIAPHRAGM DETAILS - PIER 7G
B-31 INTERIOR DIAPHRAGM DETAILS - PIERS 4G THRU 6G & 8G THRU 12G
B-32 DIAPHRAGM AND STRUCTURAL STEEL - MISCELLANEOUS DETAILS
B-33 STRUCTURAL STEEL MISCELLANEOUS DETAILS
B-34 BOX GIRDER - FIELD SPLICES
B-35 STEEL BOX GIRDER CAMBER DIAGRAM - UNIT 1
B-36 STEEL BOX GIRDER CAMBER DIAGRAM - UNIT 2
B-37 DECK REINFORCEMENT - UNIT 1
B-38 DECK REINFORCEMENT - UNIT 2
B-39 DECK REINFORCEMENT AND SECTIONS - UNITS 1 & 2
B-40 DECK REINFORCING AT EXPANSION DEVICES
B-41 EXPANSION DEVICE (0-9 INCH) - PIER 3H(S)
B-42 EXPANSION DEVICE (0-9 INCH) - PIER 7G
B-43 EXPANSION DEVICE (0-9 INCH) - ABUTMENT 13G
B-44 EXPANSION DEVICE (0-9 INCH) DETAILS
B-45 STEEL BOX GIRDER BRIDGE EXPANSION JOINT DETAILS
B-46 BRIDGE RAIL TYPE 4
B-47 BRIDGE DRAIN (SPECIAL)
B-48 APPROACH SLAB DETAILS
B-49 INTERIOR LIGHTING (STEEL BOX GIRDER)
B-50 BENCH MARK
B-51 BRIDGE DECK ELEVATIONS
B-52 BRIDGE DECK ELEVATIONS
B-53 BRIDGE DECK ELEVATIONS
B-54 BRIDGE DECK ELEVATIONS
B-55 BRIDGE DECK ELEVATIONS
B-56 BRIDGE DECK ELEVATIONS
B-57 ROADWAY APPROACHES

AS CONSTRUCTED
NO REVISIONS ☐ REVISED ☐ VOID ☐

FED. ROAD REGION	DIVISION	PROJ. NO.	SHEET NO.	SHEET TOTALS
VIII	COLO.	IR25-2(208)	91	

REVISIONS

CROSS REFERENCE DRAWING NUMBER
B-
SECTION OR DETAIL IDENTIFICATION

BRIDGE DESCRIPTION

UNIT 1 : 4-SPAN (97'-10 13/16", 118'-4 1/16", 118'-3 15/16", 116'-2 1/2") BRIDGE.
UNIT 2 : 6-SPAN (86'-1 5/8", 137'-6", 172'-8 7/8", 138'-1 11/16", 111'-0", 88'-8 5/8") BRIDGE.
EACH UNIT CONTINUOUS AND COMPOSITE, STEEL BOX GIRDER.

OVER I-25 AND 6TH AVENUE.
VARIABLE ROADWAY WIDTH AND SKEW.
1'-6" CONCRETE BARRIERS. BRIDGE RAIL TYPE 4.

	INITIAL	DATE
DESIGNED BY	J.L.S.	11-87
CHECKED BY	J.A.B.	1-88
DETAILED BY	S.S.	11-87
CHECKED BY		

DeLeuw, Cather & Company Denver, CO.

COLORADO REGISTERED JEFFREY L. STAPLETON 19560 PROFESSIONAL ENGINEER

Reviewed

BRIDGE ENGINEER DATE

DIVISION OF HIGHWAYS

GENERAL INFORMATION
Sta. 803+18.00 to 815+11.75

In DENVER Sec. 4 & 9 T4S R68W

Designer J. L. Stapleton | Structure Numbers F-16-OL
Detailer S. Shibao
Drawing Number B-1 of 57 Drawings

Revision Dates (Preliminary Stage Only)

STATE OF COLORADO
STATE DEPARTMENT OF HIGHWAYS
DIVISION OF HIGHWAYS
D.O.H. FORM NO. 126
REV. FEB. 1984

AS CONSTRUCTED		
NO REVISIONS ☐	REVISED ☐	VOID ☐

FED. ROAD REGION	DIVISION	PROJ. NO.	SHEET NO.	SHEET TOTALS
VIII	COLO.	IR25-2(208)	92	

SUMMARY OF QUANTITIES

	ITEM NO.	DESCRIPTION	UNIT	SUPER-STRUCTURE	PIER 3H(S) ABUT. 1	PIER 4G 2	PIER 5G 3	PIER 6G 4	PIER 7G 5	PIER 8G 6	PIER 9G 7	PIER 10G ABUT. 8	PIER 11G	PIER 12G	ABUT. 13G	TOTAL
	206	STRUCTURE EXCAVATION	CU. YD.			7	7	7	103	7	7	7	7	7	319	478
	206	STRUCTURE BACKFILL (CLASS 1)	CU. YD.												394	394
	206	STRUCTURE BACKFILL (CLASS 2)	CU. YD.			5	5	5	86	5	5	5	5	5		126
	206	FILTER MATERIAL (CLASS B)	CU. YD.												5	5
	403	HOT BITUMINOUS PAVEMENT (GR. E)														
		(HAUL AND ASPHALT)	TON	287												287
	410	PLANT MIXED SEAL COAT (TYPE B)														
		(HAUL AND ASPHALT)	TON	172												172
	503	DRILLED CAISSON (30 INCH)	LIN. FT.												350	350
	503	DRILLED CAISSON (84 INCH)	LIN. FT.			51	51	58	54	44		42	36.5	45.5		382
①	509	STRUCTURAL STEEL	LB.	1,648,700	280		305		560		305	305	305		280	1,651,040
	512	BEARING DEVICE (TYPE III)	EACH		2	2	2	2	4	2	2	2	2	2	2	24
	513	BRIDGE DRAIN (SPECIAL)	EACH	4												4
	515	WATERPROOFING (MEMBRANE)	SQ. YD.	4,174												4,174
	518	BRIDGE COMPRESSION JOINT SEALER	LIN. FT.												18	18
	518	WATERSTOP (6 INCH)	LIN. FT.												26	26
	518	BRIDGE EXPANSION DEVICE (0-9 INCH)	LIN. FT.	104												104
	601	CONCRETE CLASS B (BRIDGE)	CU. YD.												108	108
②	601	CONCRETE CLASS D (BRIDGE)	CU. YD.	1,238		13	14	9	80	24	21	22	24	12	36	1,493
③	601	CONCRETE CLASS S (BRIDGE)	CU. YD.			33	29	29		29	33	29	29	29		240
	602	REINFORCING STEEL	LB.												2,490	2,490
④	602	REINFORCING STEEL (EPOXY COATED)	LB.	463,200		12,380	11,155	10,190	16,520	15,090	12,325	14,805	15,645	11,190	14,370	596,870
	606	BRIDGE RAIL TYPE 4	LIN. FT.	2,409											30	2,439
⑥	606	BRIDGE RAIL TYPE 4 SPECIAL	LIN. FT.	526												526
	613	3/4- INCH ELECTRICAL CONDUIT	LIN. FT.	78												78
	613	2 - INCH ELECTRICAL CONDUIT	LIN. FT.	1,200												1,200
	613	INTERIOR LIGHTING (STEEL BOX GIRDER)	EACH	1												1
⑤	618	PRESTRESSING STEEL BAR	M. KFT.			24.2	22.5	22.5		22.5	24.8	22.5	22.5	22.5		184
	626	MOBILIZATION	LS													.7

① *Includes 117,200 Lbs. of A-36 Steel for interior bracing; 12,260 Lbs. of A-36 Steel for temporary bracing is incidental to the project and will not be paid for separately.*

② *Includes 20 Cu. Yds. Concrete Class D for approach slab.*

③ *Volume of concrete for payment shall not be reduced by the volume of prestressing ducts.*

④ *Includes 2,720 Lbs. Reinforcing Steel (Epoxy-Coated) for approach slab.*

⑤ *Includes furnishing, placing in the concrete and post-tensioning the prestressing steel. The Contractor shall furnish all stressing equipment and accessories required for installation and stressing operations. Quantity shall not be remeasured, but shall be the number shown.*

⑥ *Applies to bridge barrier replacement on Existing Structure F-16-DU*

	INITIAL	DATE
DESIGNED BY	K.M.A.	3-88
CHECKED BY	S.S.J.	3-88
DETAILED BY	S.S.	3-88
CHECKED BY		
QUANTITIES BY	K.M.A.	3-88
CHECKED BY	S.S.J.	3-88

DeLeuw, Cather & Company Denver, CO.

DIVISION OF HIGHWAYS

SUMMARY OF QUANTITIES

(KAN 2 P)

Designer K. Alkanani
Detailer S. Shibao
Structure Numbers F-16-OL
Drawing Number B-2 of 57 Drawings

Revision Dates (Preliminary Stage Only)

STATE OF COLORADO
STATE DEPARTMENT OF HIGHWAYS
DIVISION OF HIGHWAYS:
D. O. H. FORM NO. 126:
REV. FEB. 1984

AS CONSTRUCTED		
NO REVISIONS	REVISED	VOID

FED. ROAD REGION	DIVISION	PROJ. NO.	SHEET NO.	SHEET TOTALS
VIII	COLO.	IR 25-2(209)	93	

REVISIONS

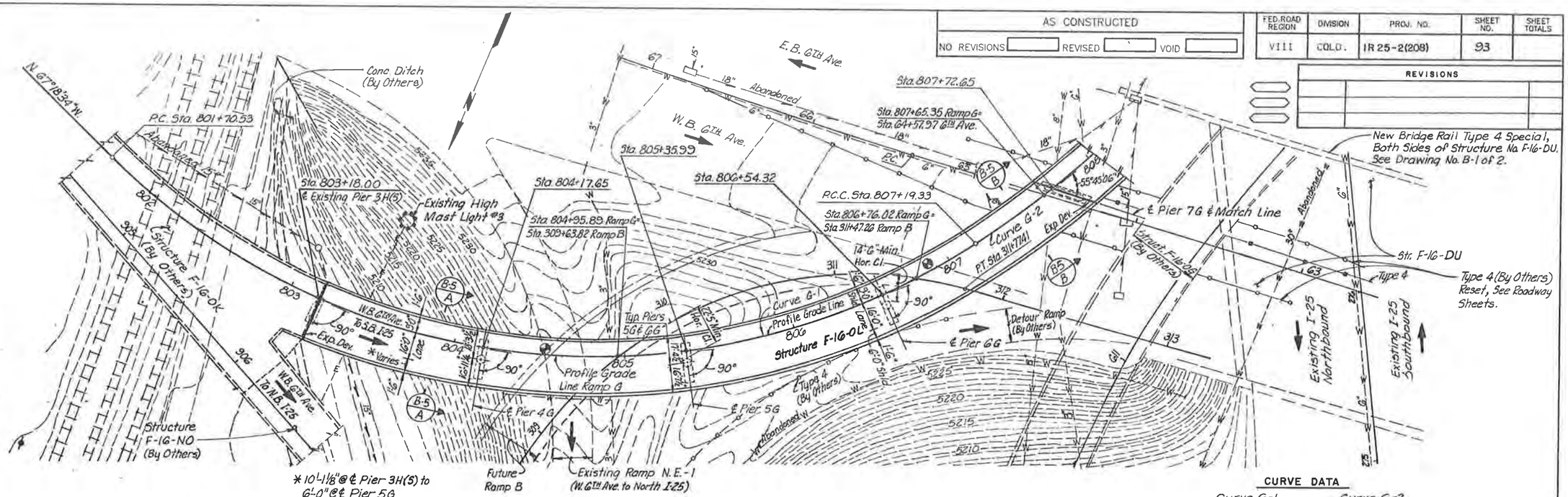

PLAN

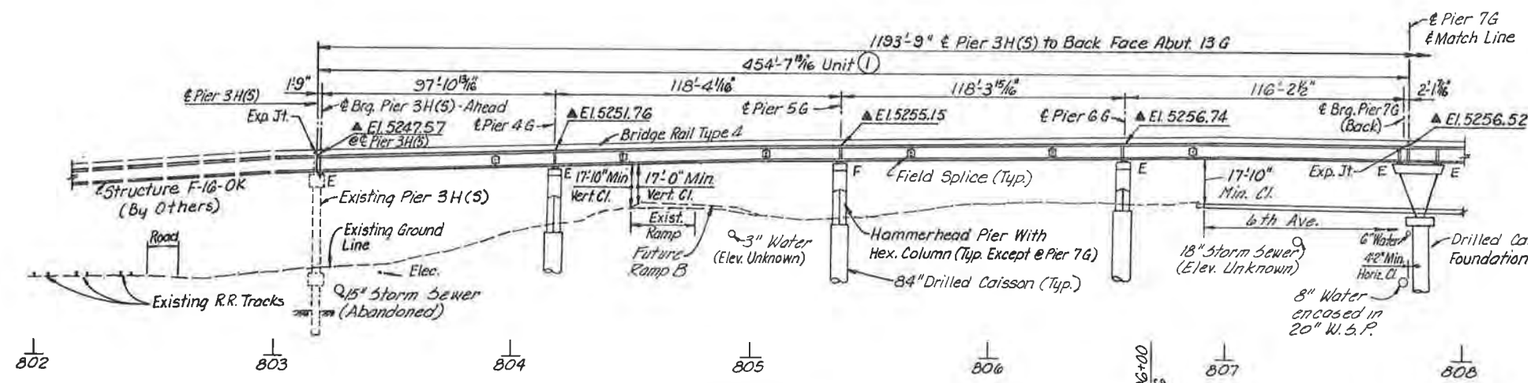

SECTION

Taken At Profile Grade Line Ramp G
▲ Finished Grade Elevations

CURVE DATA

Curve G-1	Curve G-2
Δ = 78°36'38" Lt.	Δ = 83°40'08" Lt.
D = 14°19'26"	D = 9°32'58"
R = 400.00'	R = 600.00'
L = 548.81'	L = 876.18'
T = 327.46'	T = 537.11'
e = 0.075 Ft./Ft.	e = 0.066 Ft./Ft.
MDS = 35 M.P.H.	MDS = 35 M.P.H.
SSD = 230'	SSD = 288'

Right Shoulder Cross-Slope Transition:
.0396 Ft/Ft At Sta. 803+18.00
.075 Ft/Ft At Sta. 803+78.00

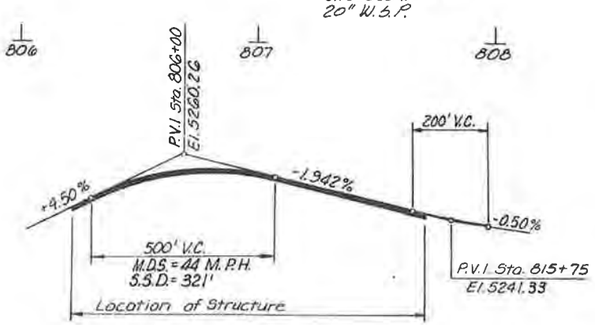

PROFILE GRADE RAMP "G"

NOTES:

1. Live Loading = HS 20-44 And Interstate Alternate
2. For Continuation of Bridge Structure (Unit 2) See Dwg. No. B-4.
3. Construction Labeled "By Others" Is Under Project IR25-2(191).

◐ Indicates Point of Minimum Vertical Clearance.

DESIGNED BY	J. AB	6-87	
CHECKED BY	R. KRN	9-87	
DETAILED BY	R. NH	6-87	

De Leuw, Cather & Company — Denver, CO.

DIVISION OF HIGHWAYS

GENERAL LAYOUT

RAMP G
UNIT 1

Designer J. Barraza		Structure Numbers	F-16-OL
Detailer R. Hinshaw			
Drawing Number B-3	of 57	Drawings	

Revision Dates (Preliminary Stage Only)

STATE OF COLORADO
STATE DEPARTMENT OF HIGHWAYS
DIVISION OF HIGHWAYS:
D. O. H. FORM NO.126:
REV. FEB. 1984

AS CONSTRUCTED		
NO. REVISIONS	REVISED	VOID

FED.ROAD REGION	DIVISION	PROJ. NO.	SHEET NO.	SHEET TOTALS
VIII	COLO.	IR 25-2(208)	94	

REVISIONS	

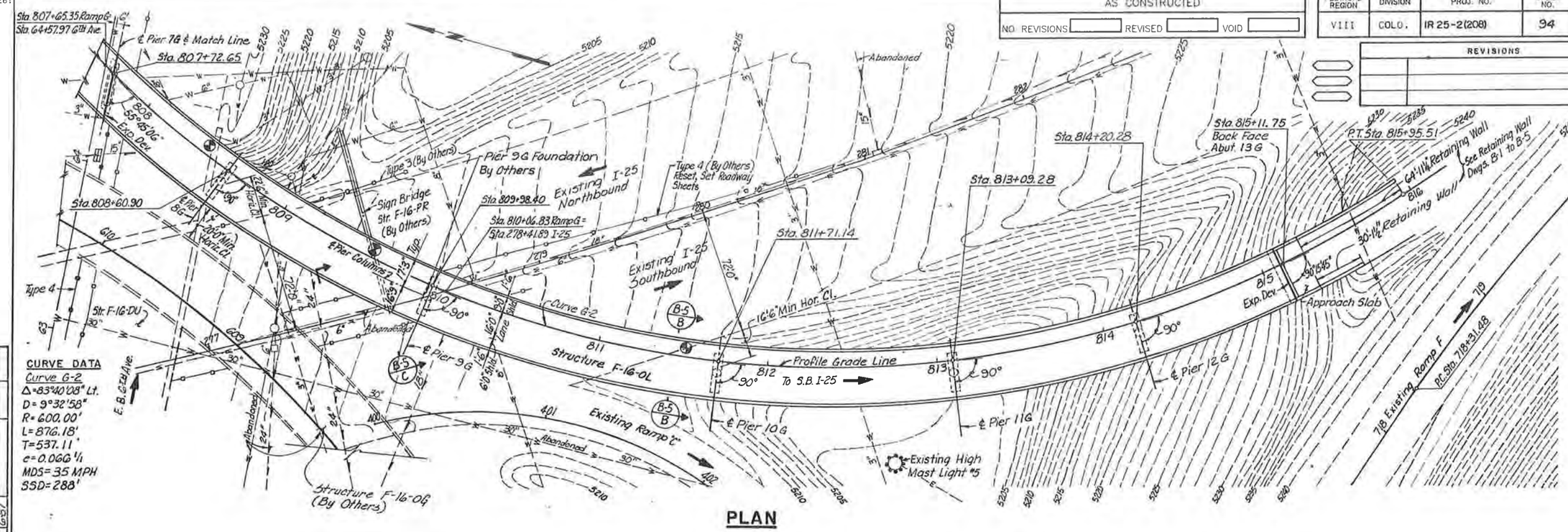

PLAN

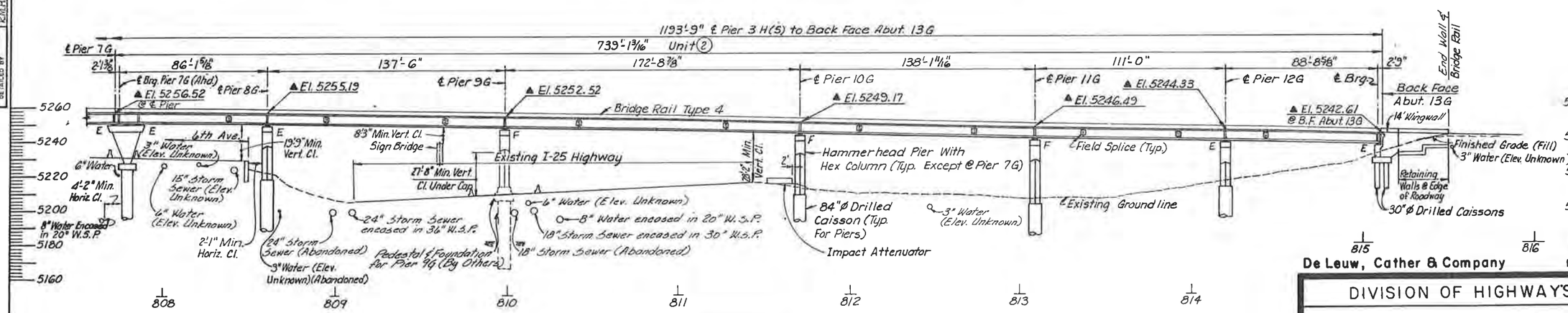

SECTION

Taken At Profile Grade Line Ramp G
▲ Finished Grade Elevations

NOTES:
1. Live Loading = HS 20-44 And Interstate Alternate
2. For Continuation of Bridge Structure (Unit 1) See Dwg. No. B-3
3. For Profile Grade Ramp G See Dwg. No. B-3
4. Construction Labeled "By Others" Is Under Project IR 25-2 (191)

◐ Indicates Point of Minimum Vertical Clearance

	INITIAL	DATE	CHECKED BY	DATE
DESIGNED BY	J.A.B.	6-87	J.A.B.	6-87
CHECKED BY	M.P.M.	9-87	M.P.M.	9-87
DETAILED BY	R.M.H.	6-87		

De Leuw, Cather & Company — Denver, CO.

DIVISION OF HIGHWAYS

GENERAL LAYOUT

RAMP G
UNIT (2)

Designer J. Barraza		Structure Numbers	F-16-OL
Detailer R. Hinshaw			
Drawing Number B-4	of 57	Drawings	

Revision Dates (Preliminary Stage Only)

STATE OF COLORADO
STATE DEPARTMENT OF HIGHWAYS
DIVISION OF HIGHWAYS
D. O. H. FORM NO. 126
REV. FEB. 1984

AS CONSTRUCTED		
NO REVISIONS	REVISED	VOID

FED. ROAD REGION	DIVISION	PROJ. NO.	SHEET NO.	SHEET TOTALS
VIII	COLO.	I R 25-2(208)	95	

REVISIONS		

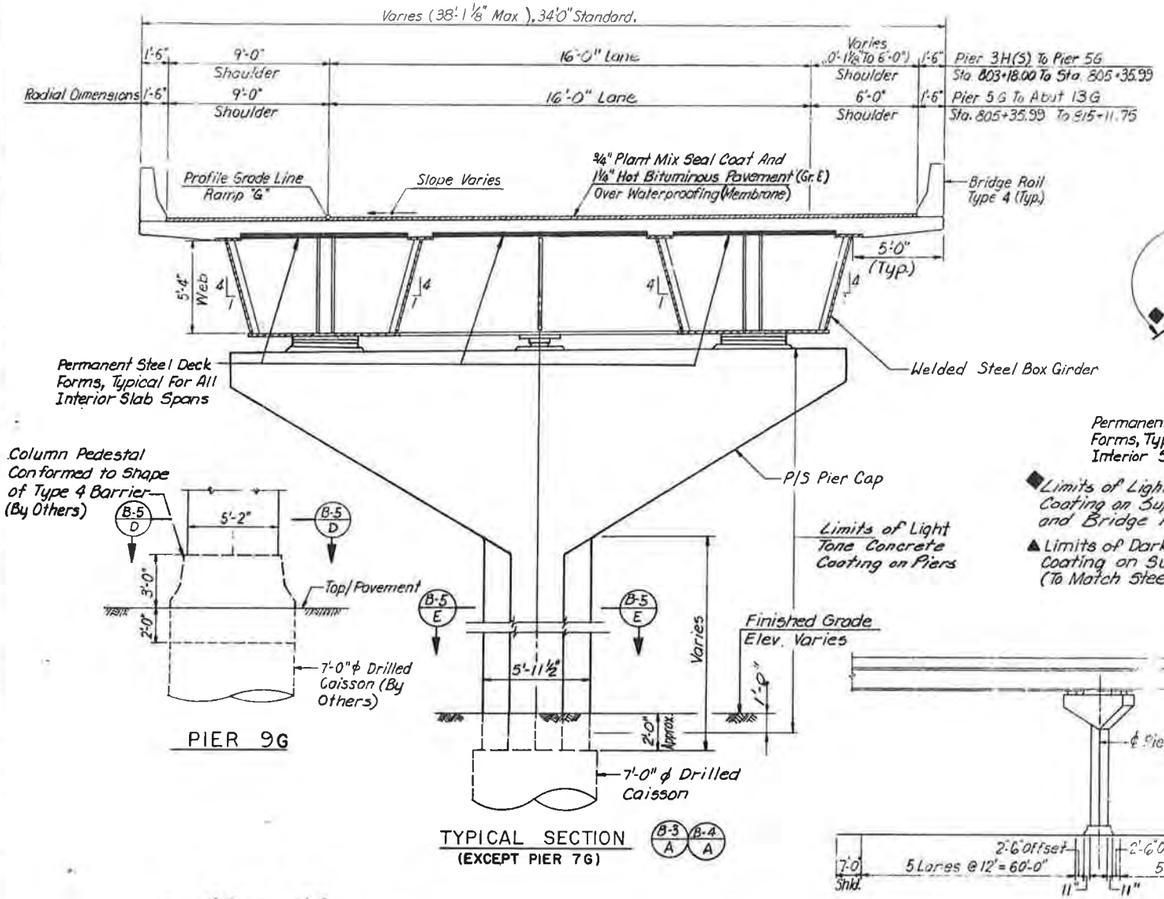

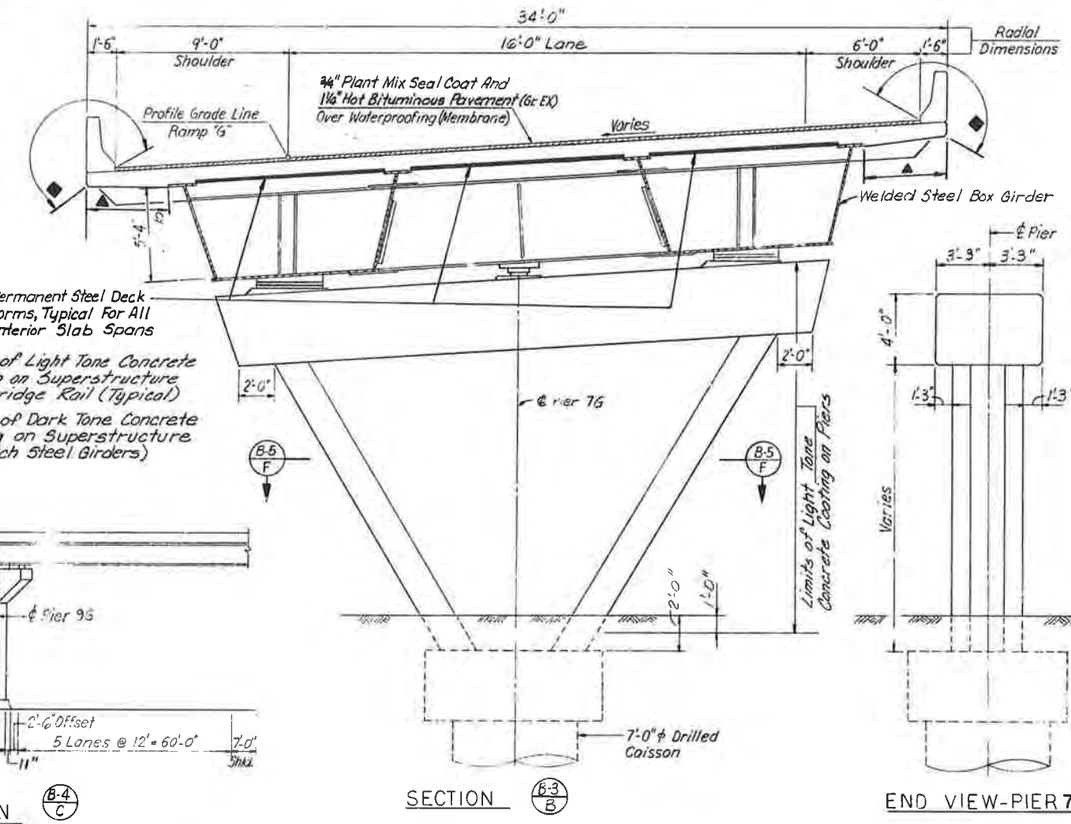

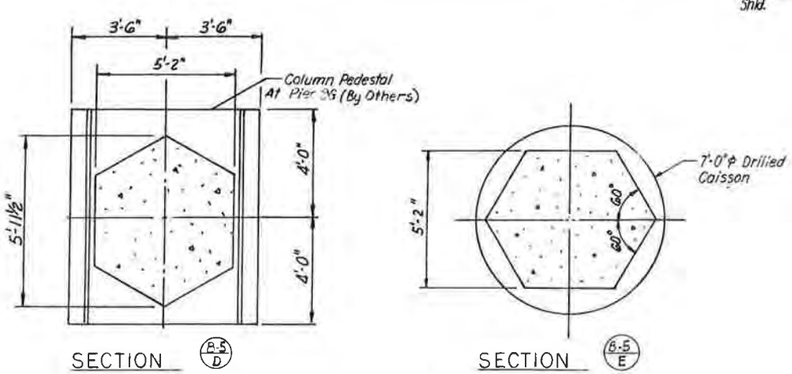

INITIAL	DATE	CHECKED BY
DESIGNED BY J.A.B.	5/87	
CHECKED BY J.L.S.	2/88	
DETAILED BY R.J.H.	5/87	

De Leuw, Cather & Company — Denver, CO

DIVISION OF HIGHWAYS

TYPICAL SECTIONS

Designer J. Barraza	Structure Numbers	F-16-OL
Detailer R. Hinshaw		
Drawing Number B-5	of 57	Drawings

Revision Dates (Preliminary Stage Only)

AS CONSTRUCTED		
NO REVISIONS	REVISED	VOID

FED. ROAD REG. NO	DIVISION	PROJECT NO.	SHEET NO	TOTAL SHEETS
VIII	COLORADO	IR25-2(208)	96	

REVISIONS

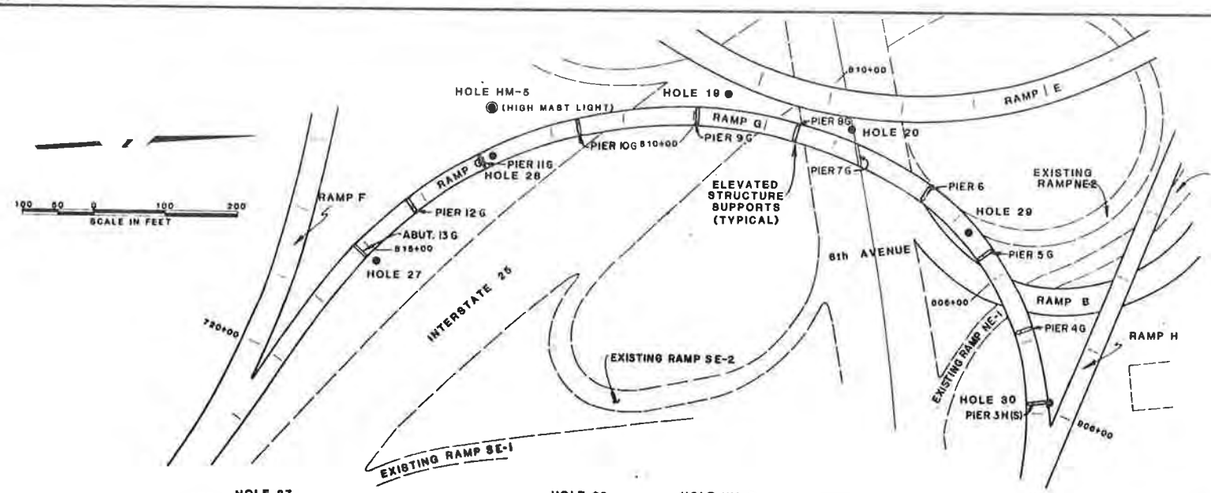

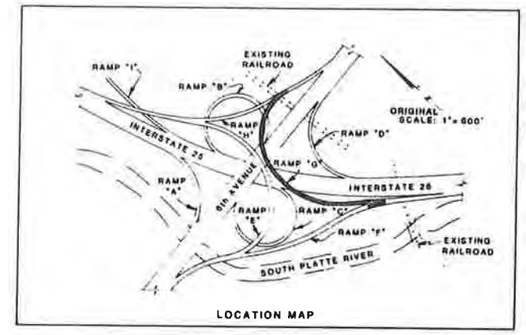

LOCATION MAP

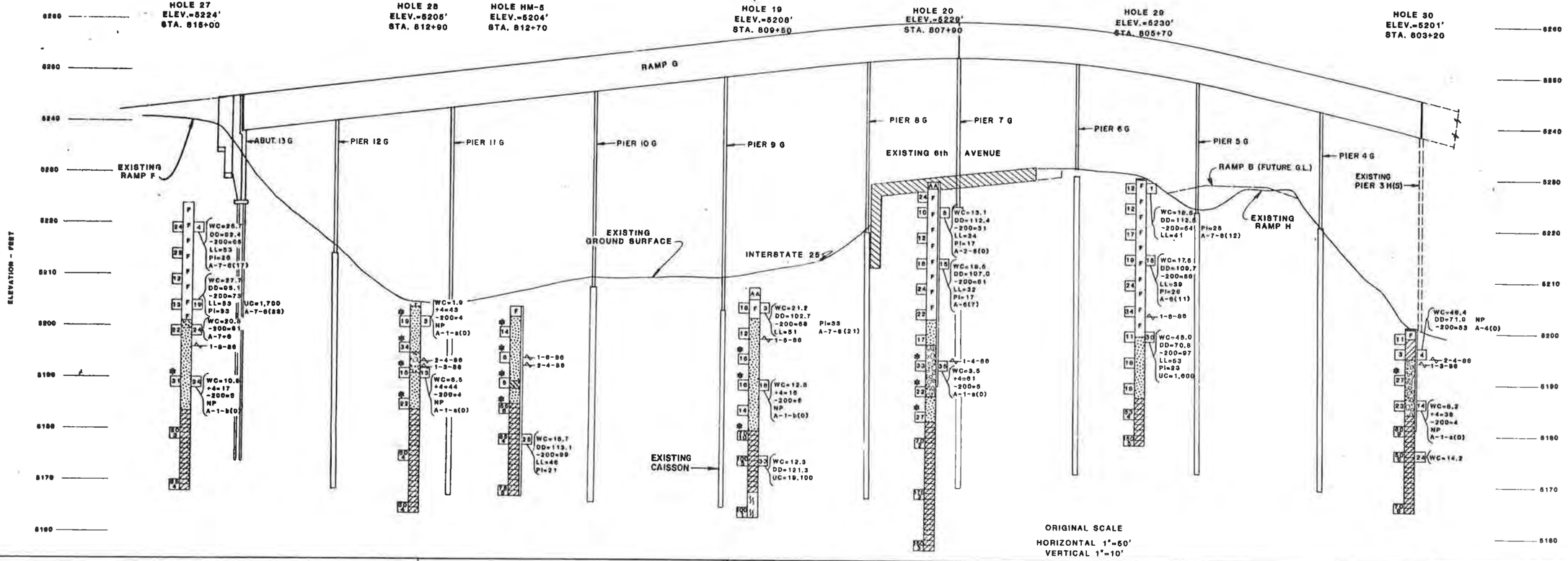

SUMMARY OF TEST RESULTS

Sample No.	Depth	Classification: Cover of Edge of Visual	Classification: AASHTO	Grading Analysis, Percent: Gravel	Coarse Sand	Fine Sand	Silt and Clay	Atterberg Limits: Liquid Limit LL	Plastic Limit PL	Plastic Index PI	Water Cont. W %	Wet Unit Weight γ P.C.F.	Unconfined Strength Q_u T.S.F.	Triaxial Shear Strength: φ°	C P.S.I.	Qty. of Samples Tested

TYPE OF MATERIAL

- TOPSOIL
- AA ASPHALT
- F FILL, GRAVELLY SAND TO SANDY CLAY, MOIST, BROWN, ESTIMATED SOME TRASH CONSISTING OF RAGS, WOOD AND METAL IN HOLE 27 AT 11' TO 18'.
- SAND (SP) CLEAN TO SLIGHTLY SILTY, LOOSE TO DENSE, MOIST TO WET, BROWN.
- SAND (SC) CLAYEY TO SILTY, LOOSE TO MEDIUM DENSE, MOIST, BROWN.
- SAND AND GRAVEL (SP-GP) CLEAN TO SILTY, MEDIUM DENSE TO DENSE, MOIST TO WET, BROWN.
- CLAY (CL) SLIGHTLY SANDY TO SANDY, MEDIUM TO STIFF, MOIST, BROWN.
- CLAYSTONE BEDROCK, HARD TO VERY HARD, MOIST, BROWN TO BLUE-GRAY.
- SS SANDSTONE BEDROCK, VERY HARD, MOIST, BROWN TO BLUE-GRAY.

LEGEND

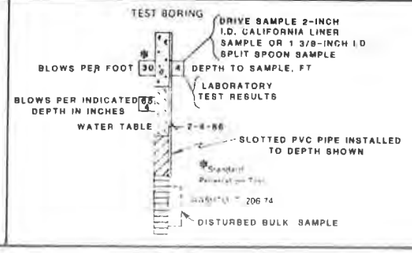

LABORATORY TEST RESULTS:

WC=MOISTURE CONTENT, %
DD=DRY DENSITY, pcf
+4=PERCENTAGE RETAINED ON NO. 4 SIEVE
-200=% PASSING NO. 200 SIEVE
LL=LIQUID LIMIT, %
PI=PLASTICITY INDEX, %
NP=NON-PLASTIC
UC=UNCONFINED COMPRESSIVE STRENGTH, pcf
SPD=MAXIMUM STANDARD PROCTOR DENSITY, pcf
OM=OPTIMUM MOISTURE CONTENT, %
R=HVEEM STABILOMETER RESISTANCE VALUE
A-1-b(0)=AASHTO CLASSIFICATION (GROUP INDEX)

HIGH MAST LIGHTING

DIVISION OF HIGHWAYS

CHEN & ASSOCIATES, INC.

ENGINEERING GEOLOGY

RAMP G

61th AVENUE/INTERSTATE 25 INTERCHANGE

Geologist
Drawn by A.S.
Checked by R.J.T.
Date February, 1986

STRUCTURE NO. F-16-OL
DWG NO. B-6 OF 57

STATE OF COLORADO
STATE DEPARTMENT OF HIGHWAYS
DIVISION OF HIGHWAYS
D. O. H. FORM NO. 126
REV. FEB. 1984

AS CONSTRUCTED		
NO REVISIONS ☐	REVISED ☐	VOID ☐

FED. ROAD REGION	DIVISION	PROJ. NO.	SHEET NO.	SHEET TOTALS
VIII	COLO.	IR25-2(208)	97	

REVISIONS		

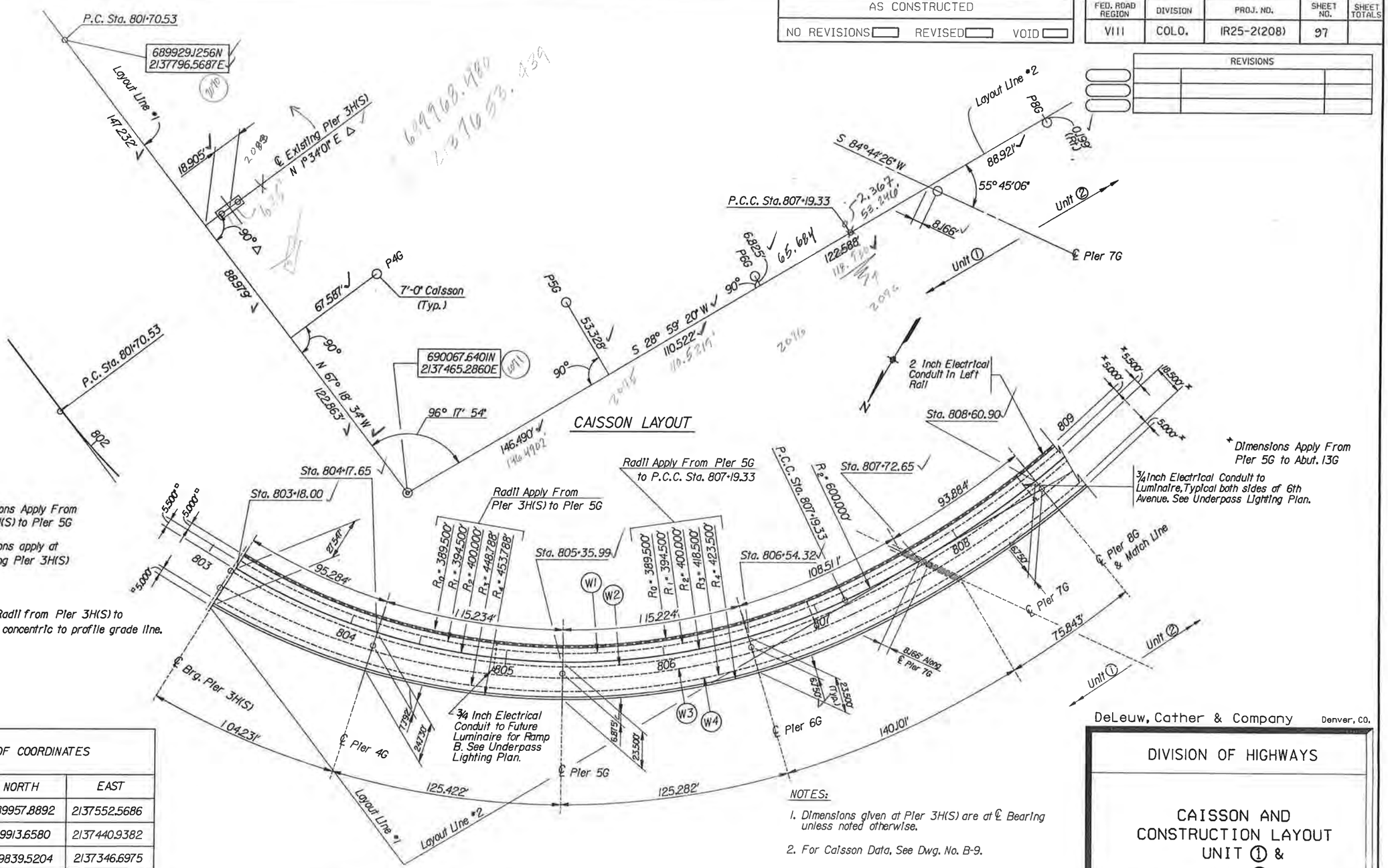

TABLE OF COORDINATES		
POINT	NORTH	EAST
℄ Pier 4G *	689957.8892	2137552.5686
℄ Pier 5G *	689913.6580	2137440.9382
℄ Pier 6G *	689839.5204	2137346.6975
℄ Pier 7G *	689738.0497	2137274.9582
℄ Pier 8G *	689661.1138	2137239.8211

* AT ℄ CAISSON

NOTES:

1. Dimensions given at Pier 3H(S) are at ℄ Bearing unless noted otherwise.
2. For Caisson Data, See Dwg. No. B-9.
3. Coordinate Data are for field layout purposes.
4. Dimensions and angles marked with a △ are based on Contract Plans IR25-2(191) and shall be field verified by the Contractor before preparation of Shop Drawings.

DeLeuw, Cather & Company Denver, CO.

DIVISION OF HIGHWAYS

CAISSON AND CONSTRUCTION LAYOUT UNIT ① & UNIT ②

Designer	B. Arright	Structure Numbers	F-16-OL
Detailer	S. Shibao		
Drawing Number	B-7 of 57 Drawings		

Revision Dates (Preliminary Stage Only)

DESIGNED BY	B. A.	11-87
CHECKED BY	J. L. S.	2-88
DETAILED BY	S. S.	11-87

UD1L1.DGN
DATE 30-MAR-1988 - TIME 07:24

STATE OF COLORADO
STATE DEPARTMENT OF HIGHWAYS
DIVISION OF HIGHWAYS
D. O. H. FORM NO. 126
REV. FEB. 1984

AS CONSTRUCTED		
NO REVISIONS ☐	REVISED ☐	VOID ☐

FED. ROAD REGION	DIVISION	PROJ. NO.	SHEET NO.	SHEET TOTAL
VIII	COLO.	IR25-2(208)	98	

REVISIONS		

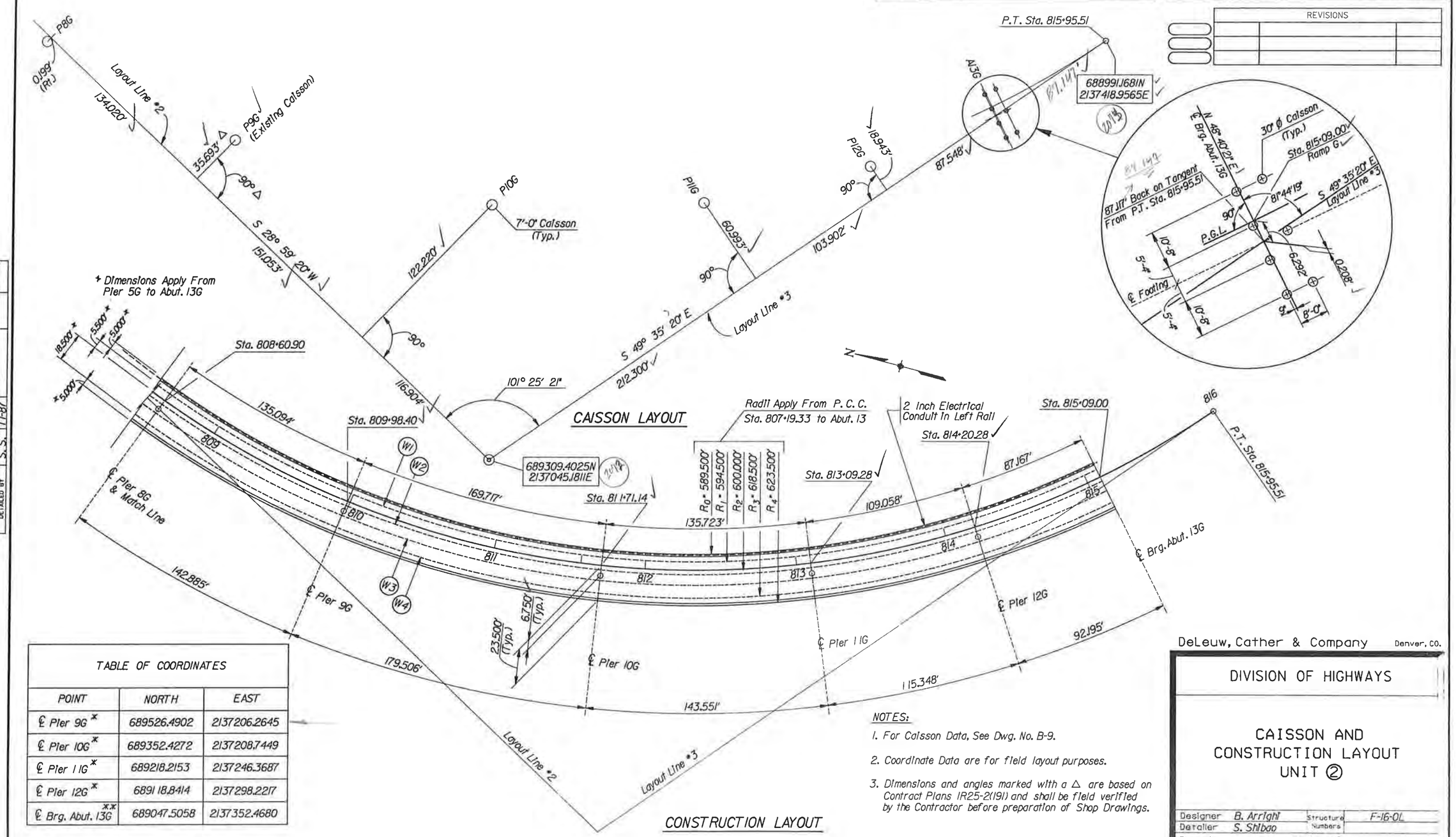

TABLE OF COORDINATES		
POINT	NORTH	EAST
℄ Pier 9G *	689526.4902	2137206.2645
℄ Pier 10G *	689352.4272	2137208.7449
℄ Pier 11G *	689218.2153	2137246.3687
℄ Pier 12G *	689118.8414	2137298.2217
℄ Brg. Abut. 13G **	689047.5058	2137352.4680

* AT ℄ CAISSON ** AT ℄ ABUTMENT FOOTING

NOTES:

1. For Caisson Data, See Dwg. No. B-9.
2. Coordinate Data are for field layout purposes.
3. Dimensions and angles marked with a △ are based on Contract Plans IR25-2(191) and shall be field verified by the Contractor before preparation of Shop Drawings.

	INITIAL	DATE	CHECKED BY
DESIGNED BY	B. A.	1-87	
CHECKED BY	J.L.S.	1-88	
DETAILED BY	S.S.	1-87	

DeLeuw, Cather & Company Denver, CO.

DIVISION OF HIGHWAYS

CAISSON AND CONSTRUCTION LAYOUT UNIT ②

Designer	B. Arright	Structure Numbers	F-16-OL
Detailer	S. Shibao		
Drawing Number	B-8 of 57 Drawings		

Revision Dates (Preliminary Stage Only)

UD1:1100.3152.DGN1
UDA1:PLOTS188.PRF
DATE 28-MAR-1988 - TIME 10:43

STATE OF COLORADO
STATE DEPARTMENT OF HIGHWAYS
DIVISION OF HIGHWAYS
D. O. H. FORM NO. 126
REV. FEB. 1984

CAISSON DATA

LOCATION	DIMENSIONS A	B	C	D	E	N1	N2	ELEVATIONS F	G	REINFORCEMENT BARS "A"	BARS "B"	MAX. AXIAL LOAD PER CAISSON	TOTAL NUMBER OF CAISSONS
PIER 4G	84"	51'-0"	7'-0"	N/A	14'-0"	6'-6"	N/A	5220.00	5183.0	36-#11	30-#11	825 TON	1
PIER 5G	84"	51'-0"	7'-0"	N/A	14'-0"	8'-0"	12'-0"	5223.00	5186.0	36-#11	48-#11(B)	760 TON	1
PIER 6G	84"	58'-0"	7'-0"	N/A	14'-0"	6'-6"	N/A	5230.00	5186.0	36-#11	30-#11	900 TON	1
PIER 7G	84"	54'-0"	N/A	3'-9"	14'-0"	N/A	N/A	5223.00	5183.0	36-#11	N/A	860 TON	1
PIER 8G	84"	44'-0"	7'-0"	N/A	14'-0"	8'-0"	14'-0"	5211.00	5181.0	40-#11	60-#11(B)	900 TON	1
PIER 9G													
PIER 10G	84"	42'-0"	7'-0"	N/A	16'-0"	8'-0"	16'-0"	5208.00	5182.0	40-#11	68-#11(B)	1,100 TON	1
PIER 11G	84"	36'-6"	7'-0"	N/A	16'-0"	8'-0"	16'-0"	5203.00	5182.5	40-#11	68-#11(B)	825 TON	1
PIER 12G	84"	45'-6"	7'-0"	N/A	14'-0"	6'-6"	N/A	5214.00	5182.5	36-#11	30-#11	760 TON	1
ABUT. 13G	30"	50'-0"	N/A	2'-9"	10'-0"	N/A	N/A	5223.50	5183.5	17-#9	N/A	135 TON	7

← Existing Caisson, Constructed under Project No. IR 25-2(191)

(B) = 2 Bar Bundle. One bar with N1 projection; the other bar with N2 projection, above top of caisson. Bars shown in table are total number of bars, e.g. 48-#11(B) means 24 X 2-#11.

AS CONSTRUCTED		
NO REVISIONS ☐	REVISED ☐	VOID ☐

FED. ROAD REGION	DIVISION	PROJ. NO.	SHEET NO.	SHEET TOTALS
VIII	COLO.	IR25-2(208)	99	

REVISIONS		

NOTES:

1. For caisson layout see Dwg. No. B-7 and B-8.
2. Dimension "E" shown is the required minimum penetration in bedrock.
3. Dimension "B" shown is based on an estimated top of bedrock elevation "G". Actual top of bedrock shall be verified by the Engineer in the field.
4. Dowel bars to match column reinforcement. See Dwg. Nos. B-11, B-13 and B-14. Dowel bars to be Epoxy Coated.
5. Dowel bars in the caisson will not be paid for separately and shall be included in pay item 503.
6. Placement of dowel bars in caisson at Pier 10G & 11G shall be done with the use of a template to ensure proper location and spacing. Steel casing for these caissons shall be left in place. Any void space between the exterior of the casing and the surrounding soil shall be compacted by water jetting, except the top 8 ft., which shall be filled with cement grout. All necessary labor and materials to be included in pay item 503.

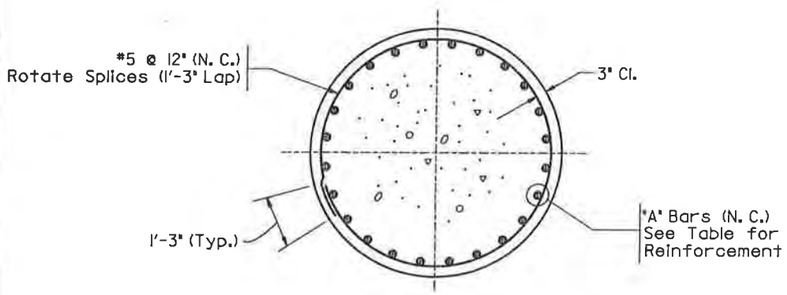

SECTION B-9 A
(Typ.)

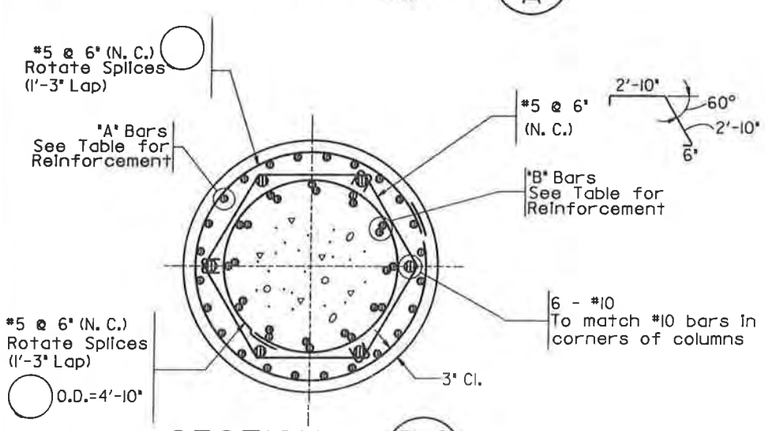

SECTION B-9 B
(Piers 4G, 5G, 6G, 8G, 10G, 11G & 12G)

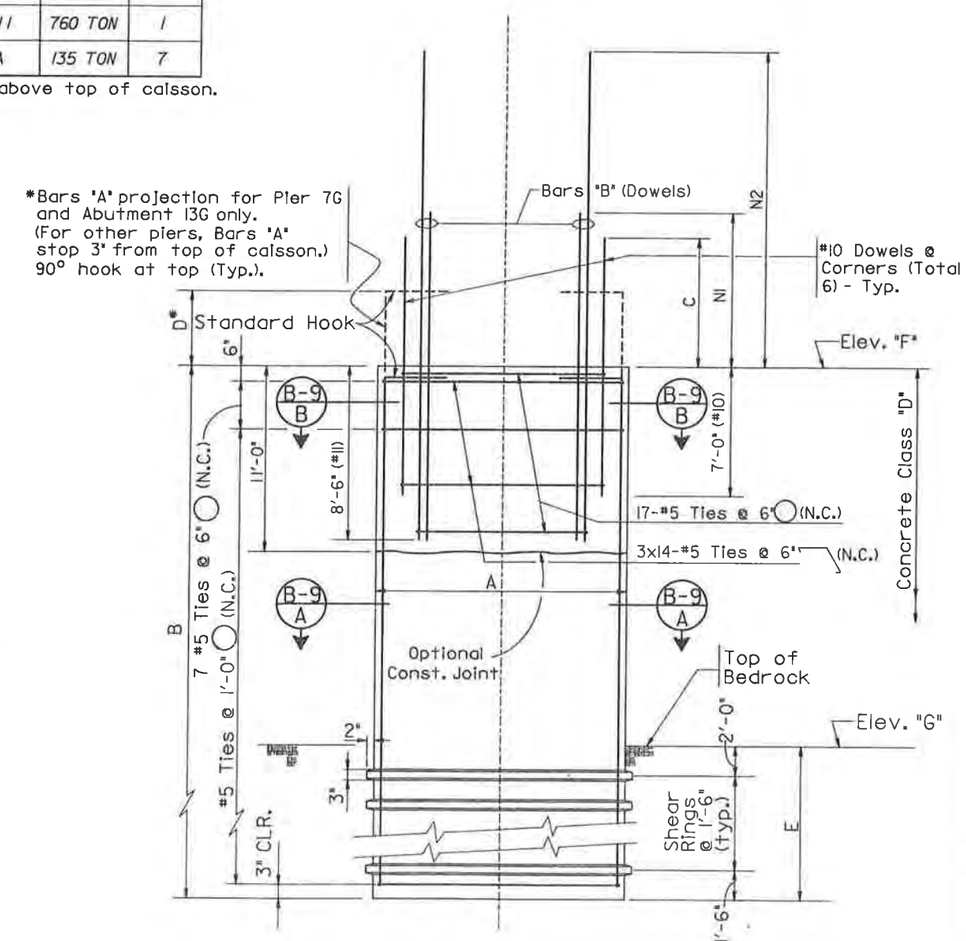

ELEVATION

INITIAL	DATE	
DESIGNED BY J. L. S.	1-7-87	CHECKED BY
CHECKED BY S. S.	3-3-88	QUANTITIES BY
DETAILED BY S. S.	1-7-87	CHECKED BY

DeLeuw, Cather & Company Denver, CO.

DIVISION OF HIGHWAYS

CAISSON DETAILS

Designer J. L. Stapleton	Structure Numbers	F-16-OL
Detailer S. Shibao		
Drawing Number B-9 of 57 Drawings		

Revision Dates (Preliminary Stage Only)

STATE OF COLORADO
STATE DEPARTMENT OF HIGHWAYS
DIVISION OF HIGHWAYS:
D. O. H. FORM NO. 1261
REV. FEB. 1984

AS CONSTRUCTED		
NO REVISIONS	REVISED	VOID

FED. ROAD REGION	DIVISION	PROJ. NO.	SHEET NO.	SHEET TOTALS
VIII	COLO.	IR25-2(208)	100	

REVISIONS		

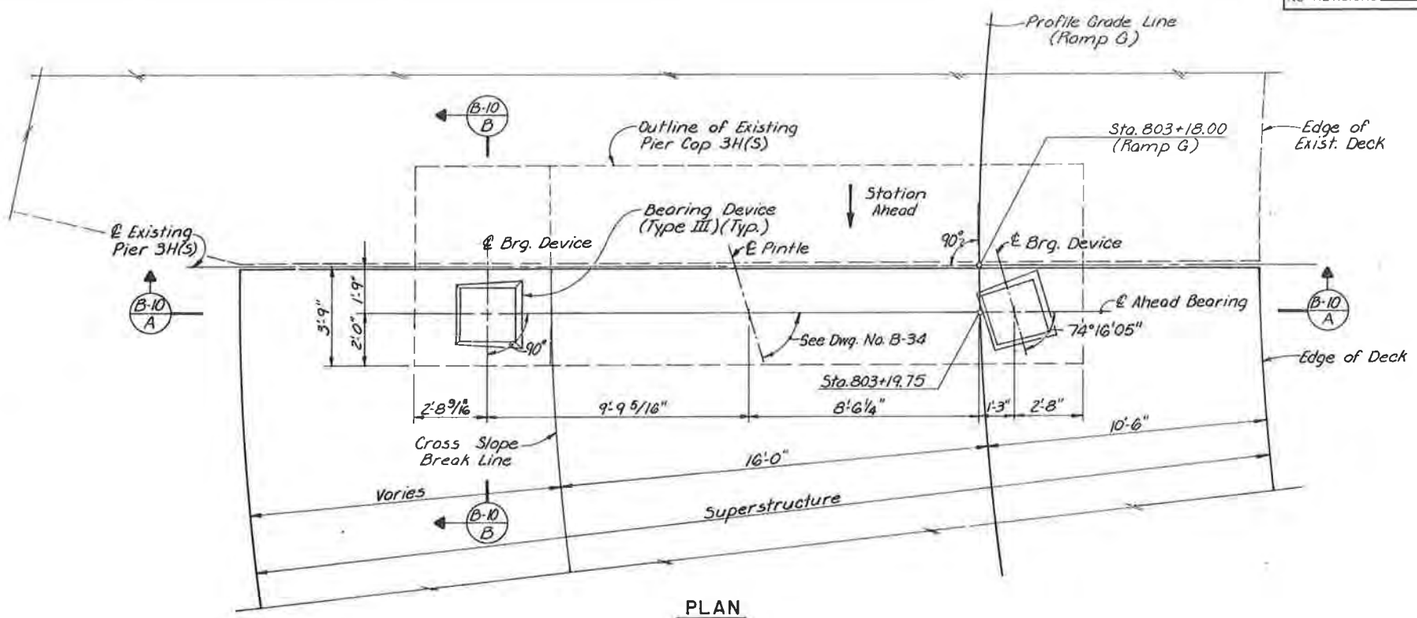

PLAN

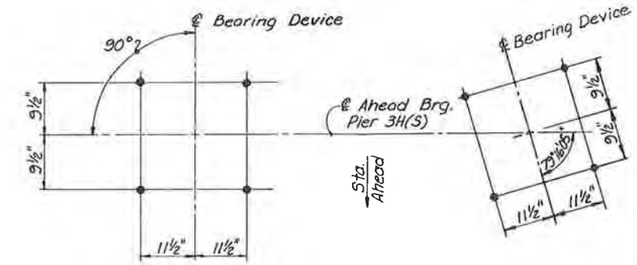

ANCHOR BOLT LAYOUT

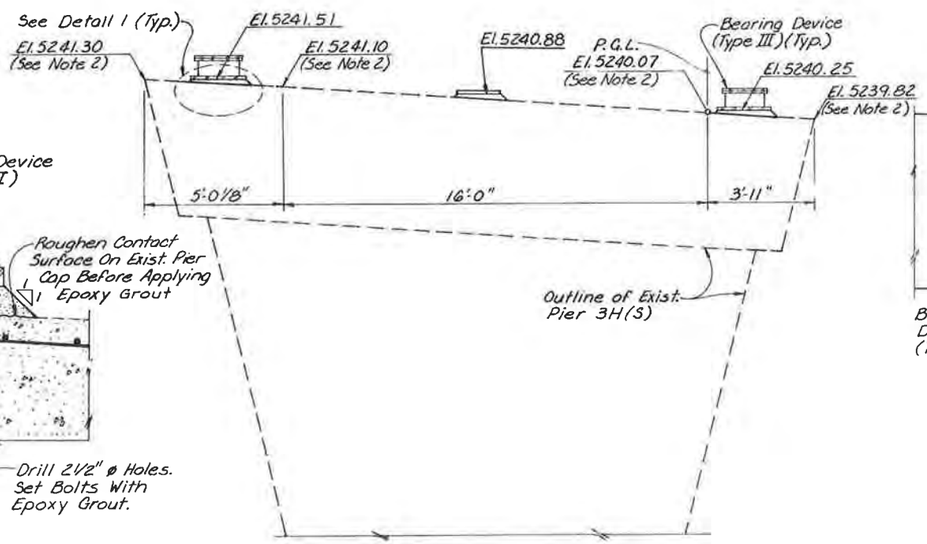

SECTION B-10 A

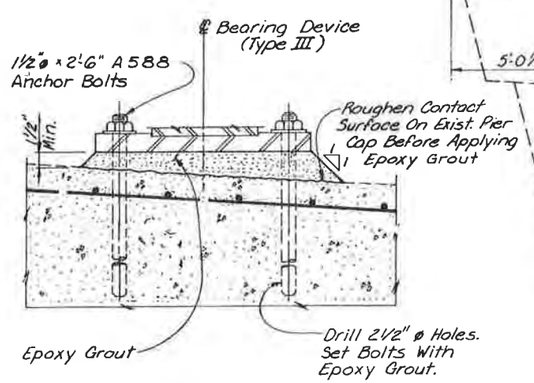

DETAIL 1

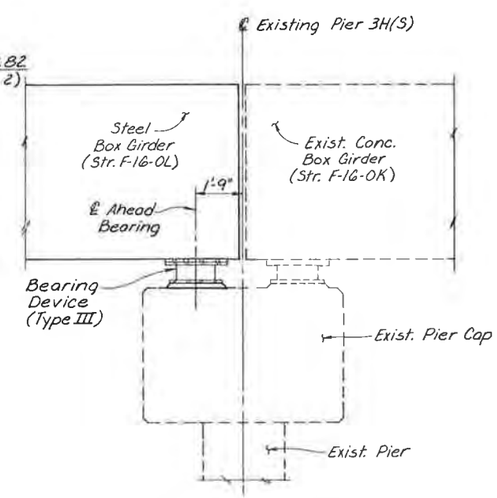

SECTION B-10 B

NOTES:

1. For Bearing Device (Type III) Details See Dwg. No. B-27.
2. Contractor Shall Verify Top of Pier Elevations At Exist. Pier 3H(S) Before Preparing Shop Drawings for Bearing Devices.
3. Bearing Seat Details Shall Conform to Dwg. No. B-27, Except As Shown in Detail 1.

	INITIAL	DATE	CHECKED BY	DATE
DESIGNED BY	M.R.M.	10-87	M.R.M.	11-87
CHECKED BY	B.A.A.	1-88	J.L.S.	11-87
DETAILED BY	D.L.K.	10-87		

De Leuw, Cather & Company — Denver, CO.

DIVISION OF HIGHWAYS

PIER 3H(S)

BEARING SEAT DETAILS

Designer M. Merklinger		Structure Numbers	F-16-OL
Detailer D. Kurschinski			
Drawing Number B-10	of 57	Drawings	

Revision Dates (Preliminary Stage Only)

STATE OF COLORADO
STATE DEPARTMENT OF HIGHWAYS
DIVISION OF HIGHWAYS
D. O. H. FORM NO. 126
REV. FEB. 1984

AS CONSTRUCTED		
NO REVISIONS	REVISED	VOID

FED. ROAD REGION	DIVISION	PROJ. NO.	SHEET NO.	SHEET TOTALS
VIII	COLO.	IR25-2(208)	101	

REVISIONS

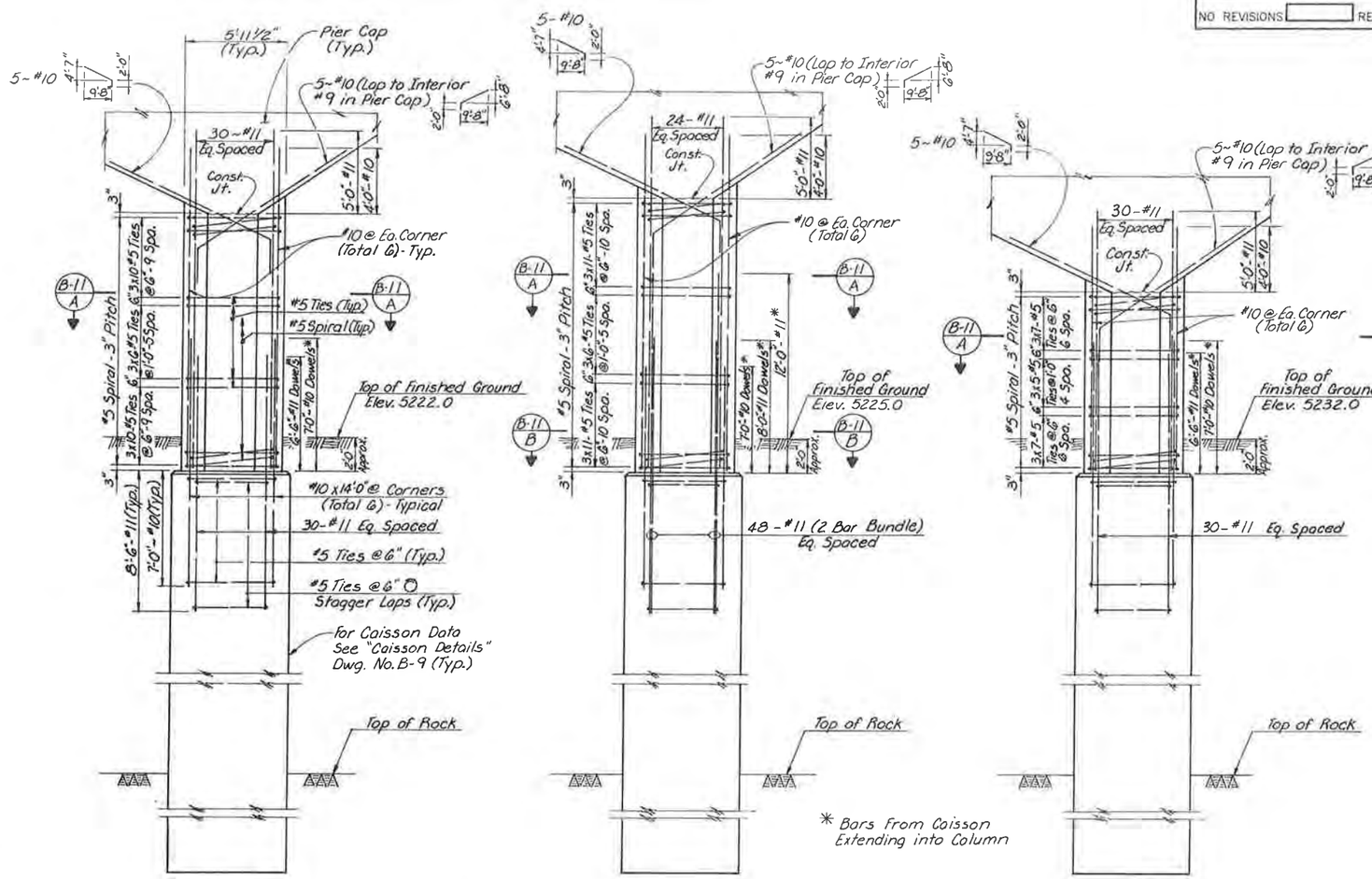

PIER 4G

PIER 5G

PIER 6G

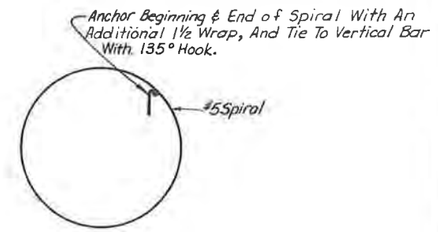

DETAIL 1

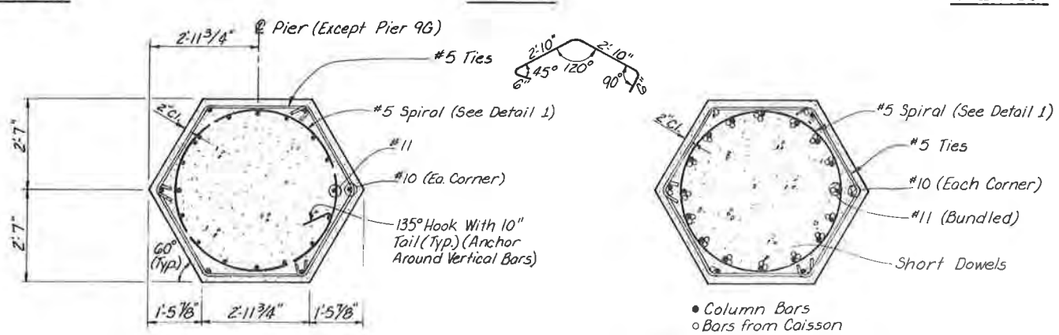

SECTION B-11 A / B-14 A

SECTION B-11 B / B-14 B

NOTES:

1. Concrete for Columns to be Class "D" Concrete, f'c = 4500 psi.
2. For Pier Cap Dimensions and Prestressing Details see Dwg. No. B-15.
3. For Pier Cap Reinforcement see Dwg. No. B-17.

	INITIAL	DATE	CHECKED BY
DESIGNED BY	RDK	1-88	
CHECKED BY	JLS	2-88	
DETAILED BY	DLK	10-87	

De Leuw, Cather & Company — Denver, CO

DIVISION OF HIGHWAYS

PIERS 4G, 5G & 6G DETAILS

Designer	R. Koester	Structure Numbers	F-16-OL
Detailer	D. Kurschinski		
Drawing Number B-11		of 57	Drawings

Revision Dates (Preliminary Stage Only)

STATE OF COLORADO
STATE DEPARTMENT OF HIGHWAYS
DIVISION OF HIGHWAYS
D. O. H. FORM NO. 1261
REV. FEB. 1984

AS CONSTRUCTED		
NO REVISIONS	REVISED	VOID

FED.ROAD REGION	DIVISION	PROJ. NO.	SHEET NO.	SHEET TOTALS
VIII	COLO.	IR25-2(208)	102	

REVISIONS

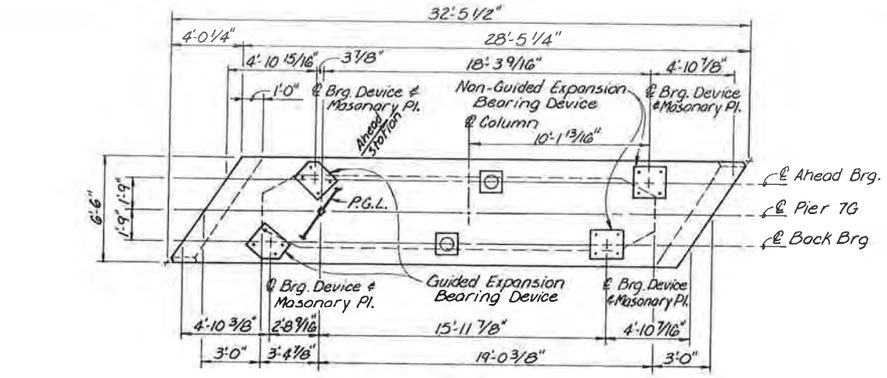

PIER CAP PLAN

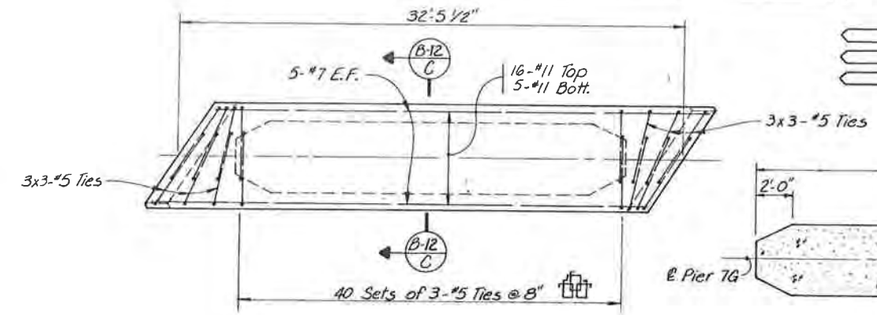

PIER CAP REINFORCEMENT

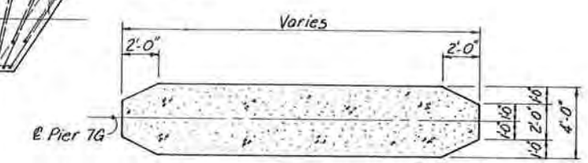

SECTION B-12 A

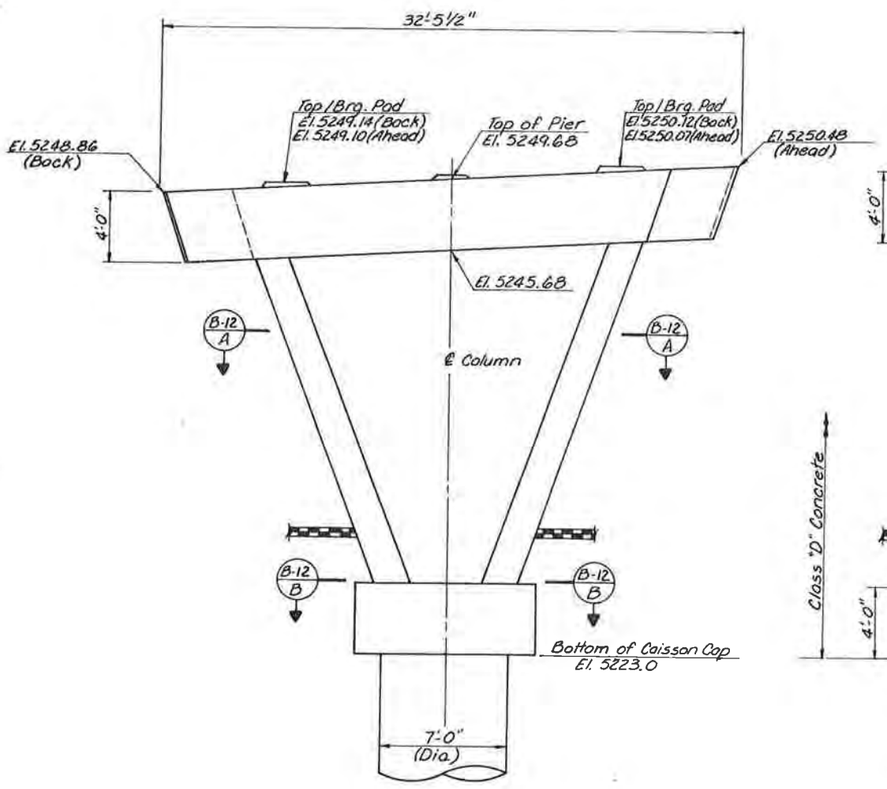

ELEVATION

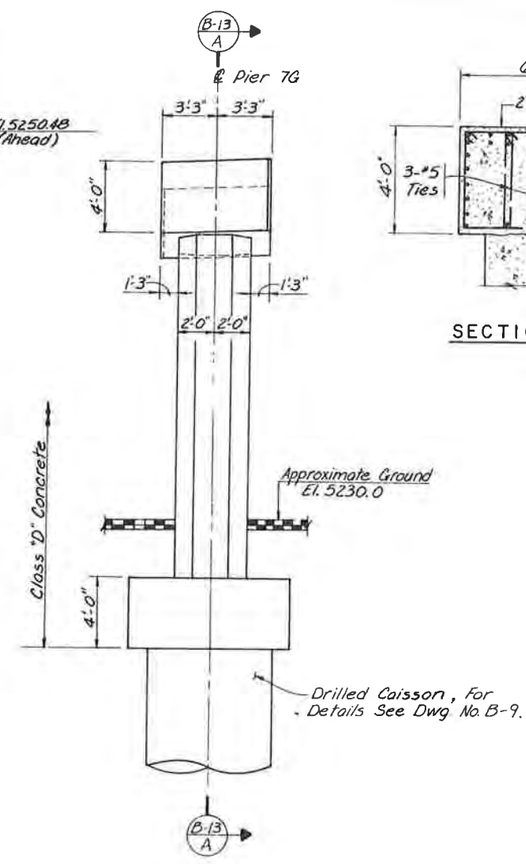

END VIEW

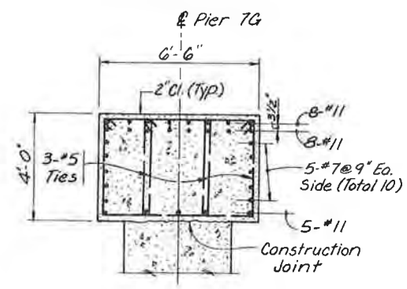

SECTION B-12 C

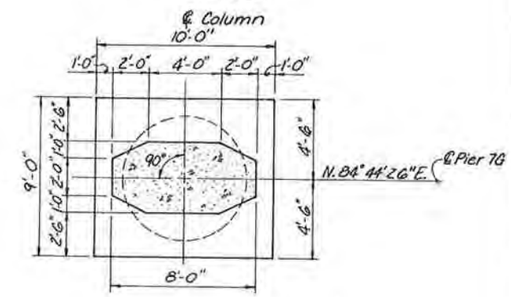

SECTION B-12 B

NOTES:
1. For Caisson Data, See Dwg. No. B-9
2. For Bearing Details, See Dwg. No.s B-27 & B-28
3. For Additional Reinforcement Details, See Dwg. No. B-13
4. For Pintle Details, See Dwg. No. B-34

	INITIAL	DATE	CHECKED BY	BAA 2-88
DESIGNED BY	BAA	10-87		
CHECKED BY	JLS	2-88		
DETAILED BY	DLK	10-87		

De Leuw, Cather & Company — Denver, CO.

DIVISION OF HIGHWAYS

PIER 7G DETAILS

Designer	B. Arrighi	Structure Numbers	F-16-OL
Detailer	D. Kurschinski		
Drawing Number	B-12	of 57	Drawings

Revision Dates (Preliminary Stage Only)

STATE OF COLORADO
STATE DEPARTMENT OF HIGHWAYS
DIVISION OF HIGHWAYS:
D. O. H. FORM NO. 126:
REV. FEB. 1984

AS CONSTRUCTED		
NO REVISIONS	REVISED	VOID

FED. ROAD REGION	DIVISION	PROJ. NO.	SHEET NO.	SHEET TOTALS
VIII	COLO.	IR25-2(208)	103	

REVISIONS		

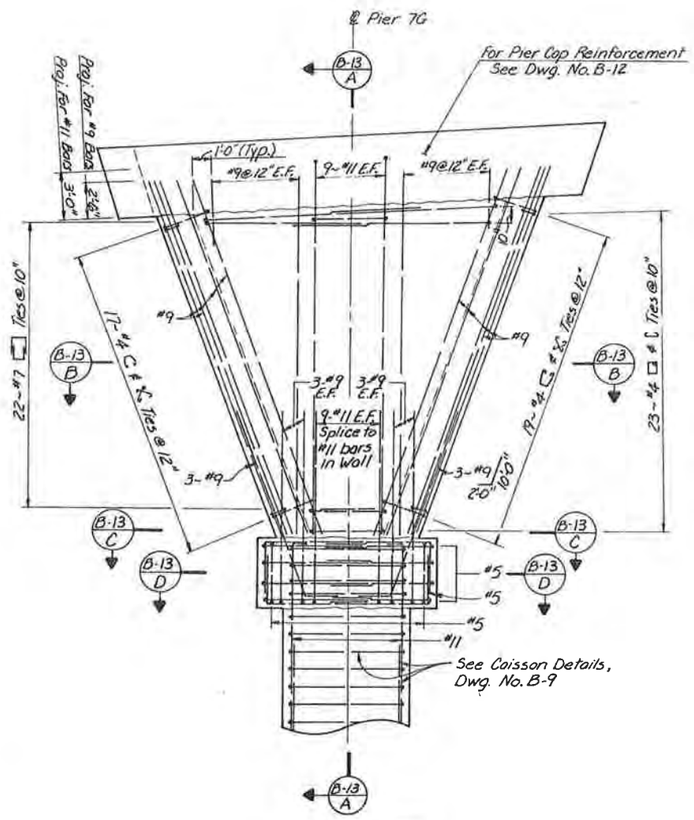

SECTION B-13 / A

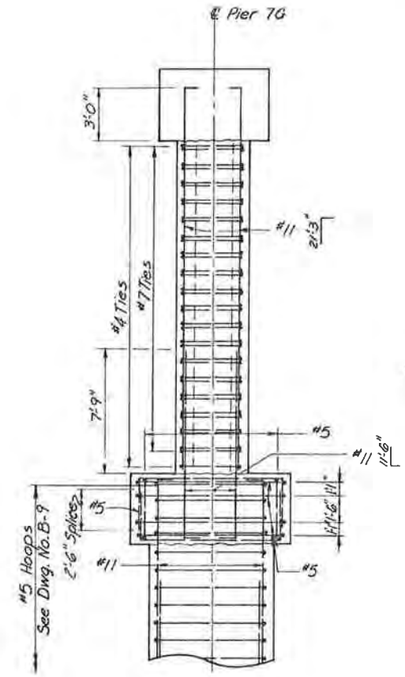

SECTION B-13 / A

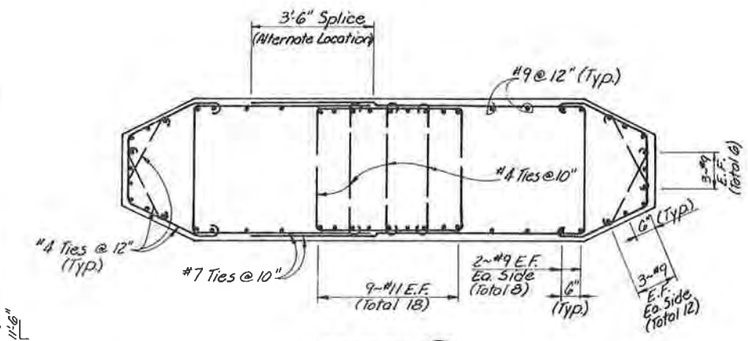

SECTION B-13 / B

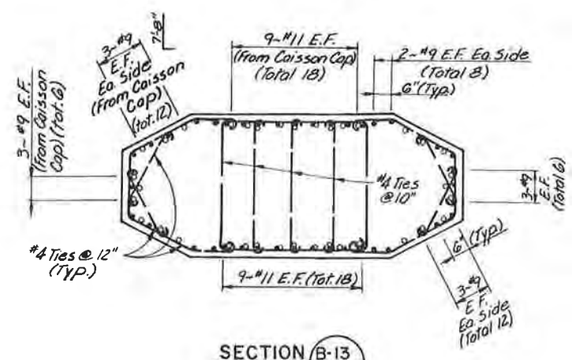

SECTION B-13 / C

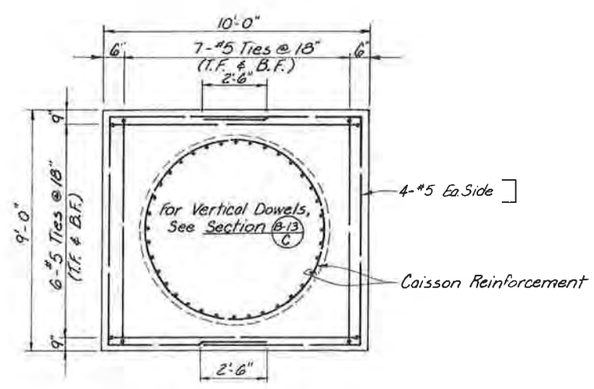

SECTION B-13 / D

NOTES:

1. For Caisson Reinforcement, See Dwg. No. B-9.
2. For Additional Pier Details See Dwg. No. B-12.

	INITIAL	DATE	CHECKED BY	BAA 2-88
DESIGNED BY	BAA	10-87		
CHECKED BY	JLS	2-88		
DETAILED BY	DLK	10-87		

De Leuw, Cather & Company — Denver, CO.

DIVISION OF HIGHWAYS

PIER 7G DETAILS

Designer	B. Arrighi	Structure Numbers	F-16-OL
Detailer	D. Kurschinski		
Drawing Number B-13		of 57	Drawings

Revision Dates (Preliminary Stage Only)

STATE OF COLORADO
STATE DEPARTMENT OF HIGHWAYS
DIVISION OF HIGHWAYS
D. O. H. FORM NO. 1261
REV. FEB. 1984

AS CONSTRUCTED		
NO REVISIONS	REVISED	VOID

FED. ROAD REGION	DIVISION	PROJ. NO.	SHEET NO.	SHEET TOTALS
VIII	COLO.	IR25-2(208)	104	

REVISIONS

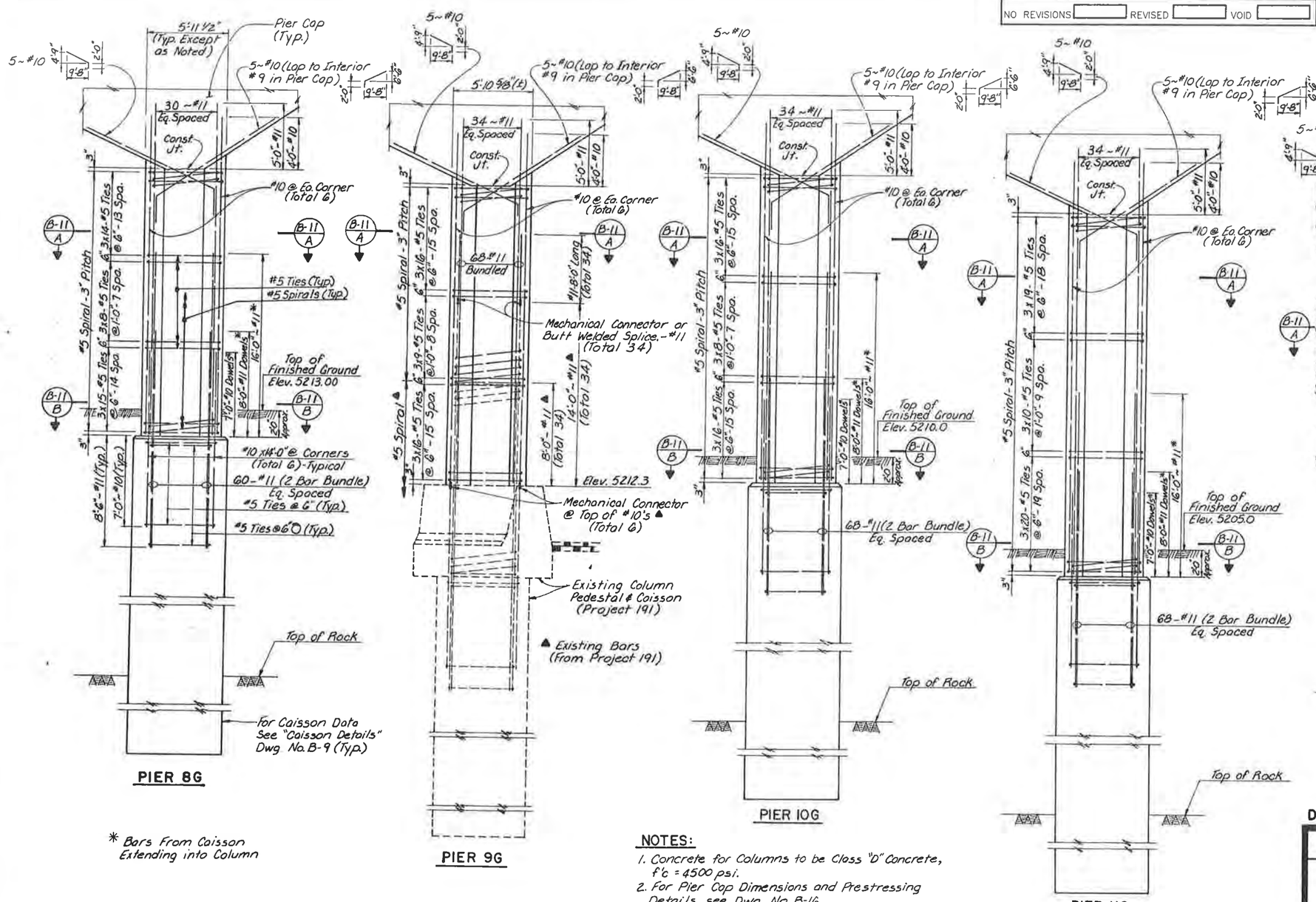

* Bars From Caisson Extending into Column

NOTES:

1. Concrete for Columns to be Class "D" Concrete, f'c = 4500 psi.
2. For Pier Cap Dimensions and Prestressing Details see Dwg. No. B-16.
3. For Pier Cap Reinforcement see Dwg. No. B-17.
4. For Sections A-A & B-B See Dwg. No. B-11.

	INITIAL	DATE	CHECKED BY
DESIGNED BY	RDK	1-83	
CHECKED BY	JLS	2-88	
DETAILED BY	DLK	10-87	

De Leuw, Cather & Company — Denver, CO.

DIVISION OF HIGHWAYS

PIERS 8G, 9G, 10G, 11G & 12G DETAILS

Designer	R. Koester	Structure Numbers	F-16-OL
Detailer	D. Kurschinski		
Drawing Number B-14		of 57	Drawings

Revision Dates (Preliminary Stage Only)

STATE OF COLORADO
STATE DEPARTMENT OF HIGHWAYS
DIVISION OF HIGHWAYS
S.L.H. FORM 1.126
REV. FEB. 1984

AS CONSTRUCTED		
NO REVISIONS	REVISED	VOID

FED. ROAD REGION	DIVISION	PROJ. NO.	SHEET NO.	SHEET TOTALS
VIII	COLO.	IR25-2(208)	105	

REVISIONS

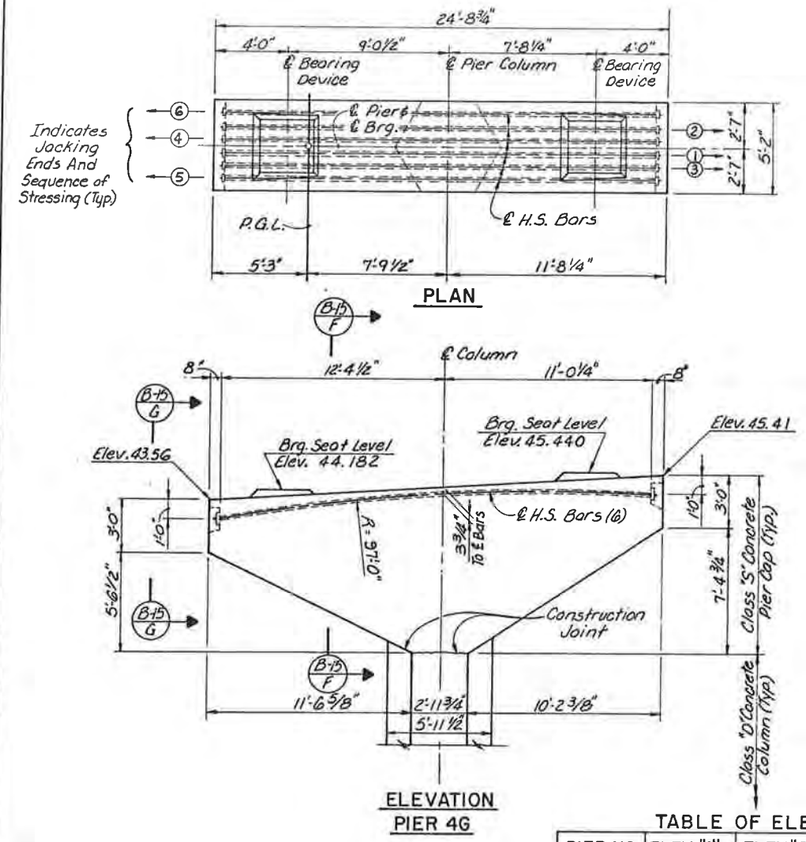

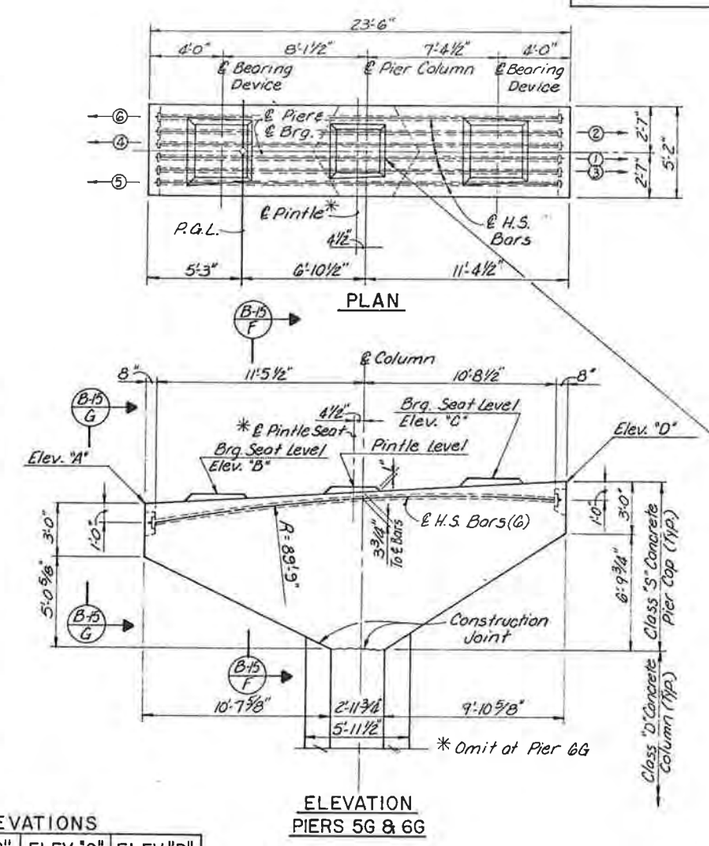

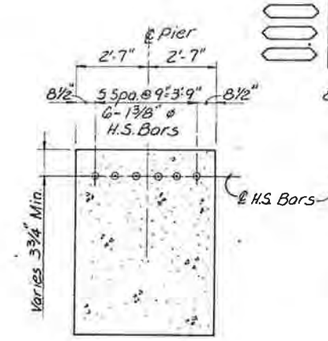

SECTION B-15 / F

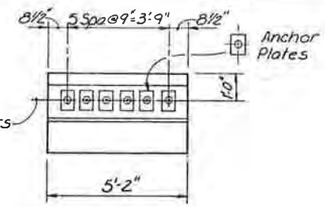

VIEW B-15 / G
(Showing Anchorage Arrangement)

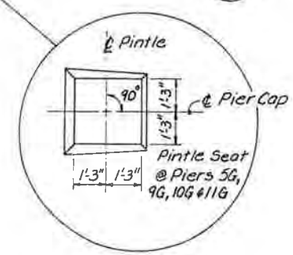

PINTLE DETAIL

TABLE OF ELEVATIONS

PIER NO.	ELEV. "A"	ELEV. "B"	ELEV. "C"	ELEV. "D"
5G	47.07	47.694	48.859	48.84
6G	48.54	49.162	50.324	50.30

PRESTRESSING NOTES:

1. GENERAL

1.1 REINFORCING THAT INTERFERES WITH THE PRESTRESSING DUCT ALIGNMENT SHALL BE ADJUSTED TO CLEAR PRESTRESSING DUCTS AS DIRECTED BY THE ENGINEER. NO CUTTING OF THE REINFORCING STEEL IS PERMITTED.

1.2 DEAD END ANCHORAGES AND LENGTH OF PROJECTING STEEL AT DEAD END ANCHORAGES SHALL PERMIT JACKING WITH THE SAME JACKING EQUIPMENT USED ON THE LIVE END.

1.3 DEVIATIONS FROM THE DUCT PATTERN, DUCT SIZE AND BAR SIZE ASSUMED IN THE DESIGN MUST BE APPROVED BY THE ENGINEER

1.4 JACKING FORCES FOR EACH PIER CAP SHALL BE AS INDICATED IN THE FOLLOWING TABLE, WHERE P(JACK) IS THE TOTAL FORCE IN KIPS FOR THE TOTAL NUMBER OF BARS BEING STRESSED AT EACH END. (3 BARS)

P(JACK) FORCES

PIER 4G,5G,&6G	477
PIERS 8G,10G,11G,&12G	477
PIER 9G	525

1.5 DESIGN IS BASED ON CORRUGATED SHEATHING, 2" OD WITH A FRICTION CURVATURE COEFFICIENT U = 0.20 AND A FRICTION WOBBLE COEFFICIENT K = 0.0003 ALLOWANCE FOR OTHER LOSSES = 20 KSI. CONTRACTOR TO SUBMIT ELONGATION AND JACKING CALCULATIONS BASED ON THESE VALUES.

1.6 THE CONTRACTOR SHALL SUBMIT CALCULATIONS FOR BEARING STRESSES AT ANCHORAGES USING:

A) AT TRANSFER OF LOAD:

$$FCP = 0.8\ f'ci\sqrt{\frac{A'b}{Ab} - 0.2} \leq 1.25\ f'ci$$

B) AT SERVICE LOAD:

$$FCP = 0.6\ f'c\sqrt{\frac{A'b}{Ab}} \leq 1.25\ f'c$$

Ab = BEARING AREA OF DEVICE
A'b = MAX. AREA OF THE DEVICE BEARING SURFACE THAT IS SIMILAR TO AND CONCENTRIC WITH THE BEARING AREA OF THE DEVICE

1.7 CONCRETE SHALL BE PLACED IN SUCH A MANNER AS TO ENSURE THAT ALIGNMENT OF POST-TENSIONING SHEATHING REMAINS UNCHANGED. SPECIAL PROVISION SHALL BE MADE TO ENSURE PROPER VIBRATION OF CONCRETE AROUND BEARING PLATES.

2. STRESSING SEQUENCE

2.1 HIGH-STRENGTH BARS SHALL BE JACKED FROM ONE END.

2.2 SEQUENCE OF PRESTRESSING SHALL BE AS SHOWN ON THE DRAWINGS.

POST-TENSIONING SEQUENCE MUST BE SHOWN ON THE POST-TENSIONING SHOP DRAWINGS.

2.3 AT THE CONTRACTORS OPTION, THE PRESTRESSING FORCE MAY VARY +/- 5 PERCENT FROM THE THEORETICAL FORCE PER BAR PROVIDED THE TOTAL P(JACK) FORCE AT EACH END IS OBTAINED AND DISTRIBUTED SYMMETRICALLY ABOUT THE CENTERLINE OF THE SECTION

3. DESIGN

3.1 CONCRETE FOR PIER CAPS SHALL BE CONCRETE CLASS S (BRIDGE)

f'ci = 4,500 psi

f'c = 5,500 psi (28 DAYS)

3.2 PRESTRESSING STEEL TO BE HIGH STRENGTH ALLOY STEEL BARS CONFORMING TO ASTM A722 WITH ULTIMATE STRENGTH f's = 150,000 psi MINIMUM.

NOTES:

1. For Pier Cap Reinforcement See Dwg. No. B-17.
2. For Column Reinforcement See Dwg. No. B-11.
3. For Anchorage Details and Notes See Dwg. No. B-16.

	INITIAL	DATE
DESIGNED BY	JAB	10-87
CHECKED BY	RDK	2-88
DETAILED BY	DLK	10-87

De Leuw, Cather & Company — Denver, CO

DIVISION OF HIGHWAYS

PIER CAP PRESTRESSING

PIERS 4G THRU 6G AND 8G THRU 12G

Designer J. Barraza
Detailer D. Kurschinski
Structure Numbers F-16-OL
Drawing Number B-15 of 57 Drawings

Revision Dates (Preliminary Stage Only)

STATE OF COLORADO
STATE DEPARTMENT OF HIGHWAYS
DIVISION OF HIGHWAYS:
J. G. H. FORM 16. 1261
REV. FEB. 1984

AS CONSTRUCTED		
NO REVISIONS	REVISED	VOID

FED. ROAD REGION	DIVISION	PROJ. NO.	SHEET NO.	SHEET TOTALS
VIII	COLO.	IR25-2(208)	106	

REVISIONS

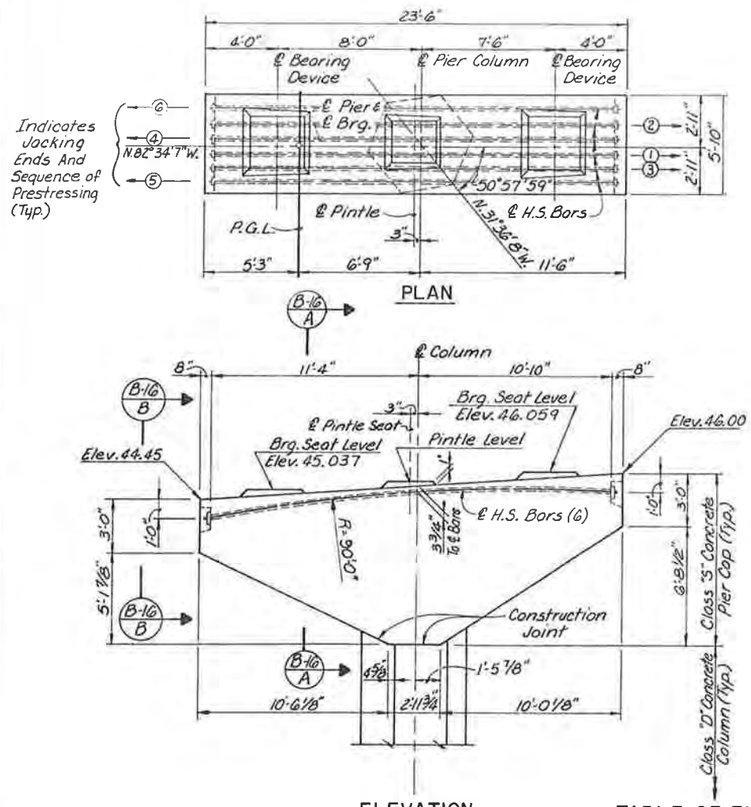

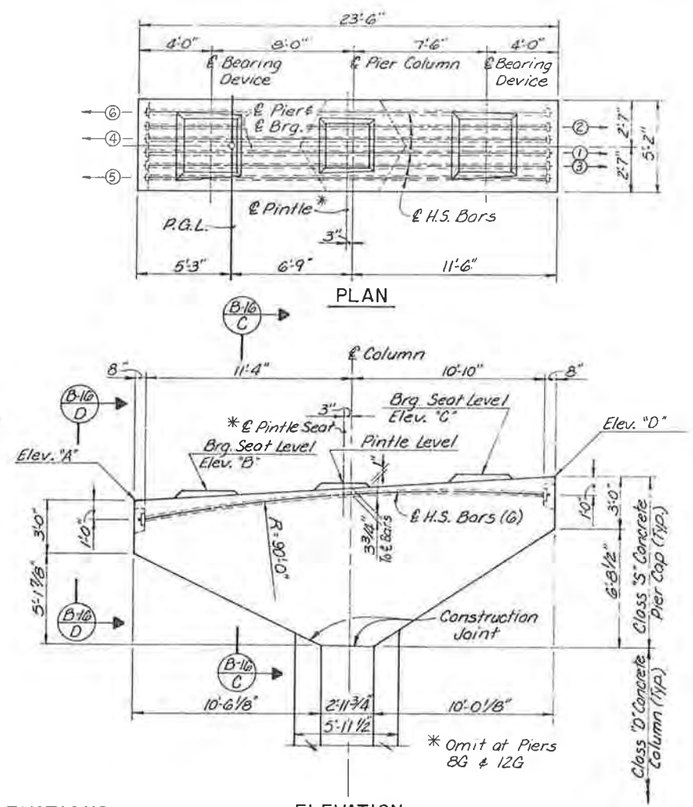

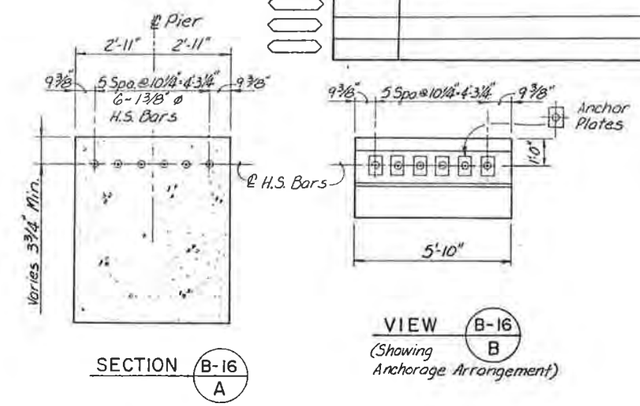

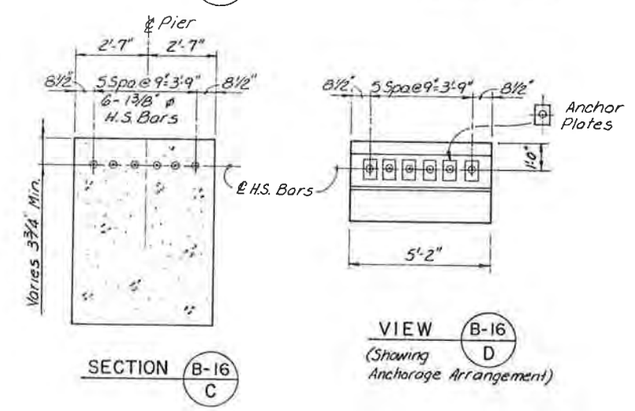

TABLE OF ELEVATIONS

PIER NO.	ELEV. "A"	ELEV. "B"	ELEV. "C"	ELEV. "D"
8G	47.06	47.643	48.708	48.65
10G	41.10	41.683	42.706	42.65
11G	38.45	39.037	40.060	40.00
12G	36.20	36.788	37.853	37.80

NOTES:

1. For Pier Cap Reinforcement, See Dwg. No. B-17.
2. For Column Reinforcement, See Dwg. No. B-14.
3. For Prestressing Notes, See Dwg. No. B-15.
4. For Pintle Details See Dwg. No. B-15.

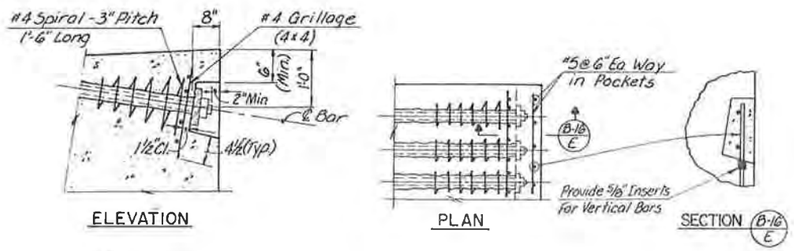

ANCHORAGE DETAILS

ANCHORAGE NOTES:

1. The anchorage shall be covered with concrete to provide a minimum of 2" cover.
2. The distance between the edge of a bearing plate and the edge or corner of the concrete shall be 2" min.
3. Ducts for prestressing bars shall be rigid ferrous metal, galvanized, mortar tight and shall be securely fastened in place to prevent movement.
4. Anchorages with plastic elements permanently embedded in the concrete will not be allowed.
5. All exposed metal surfaces of the anchorage shall be epoxy coated before filling pockets with grout.
6. After completion of prestressing and grouting of ducts, the anchorage pockets shall be cleaned and filled with non-shrink high strength grout (f'c = 6,000 psi at 28 days). The cost of this work shall be included in the unit cost of Class S Concrete (Bridge).
7. Bursting steel (spirals and grillages) shall be epoxy coated. The cost of this steel is incidental to the cost of Prestressing Steel (Bars)

	INITIAL	DATE	CHECKED BY
DESIGNED BY	JAB.	10-87	
CHECKED BY	RJK.	2-88	
DETAILED BY	DLK.	10-87	

De Leuw, Cather & Company — Denver, CO.

DIVISION OF HIGHWAYS

PIER CAP PRESTRESSING

PIERS 4G THRU 6G AND 8G THRU 12G

Designer	J. Barrazo	Structure Numbers	F-16-OL
Detailer	D. Kurschinski		
Drawing Number B-16		of 57	Drawings

Revision Dates (Preliminary Stage Only)

STATE OF COLORADO
STATE DEPARTMENT OF HIGHWAYS
DIVISION OF HIGHWAYS
D. O. H. FORM NO. 1267
REV. FEB. 1984

AS CONSTRUCTED		
NO REVISIONS	REVISED	VOID

FED. ROAD REGION	DIVISION	PROJ. NO.	SHEET NO.	SHEET TOTALS
VIII	COLO.	IR25-2(208)	107	

REVISIONS		

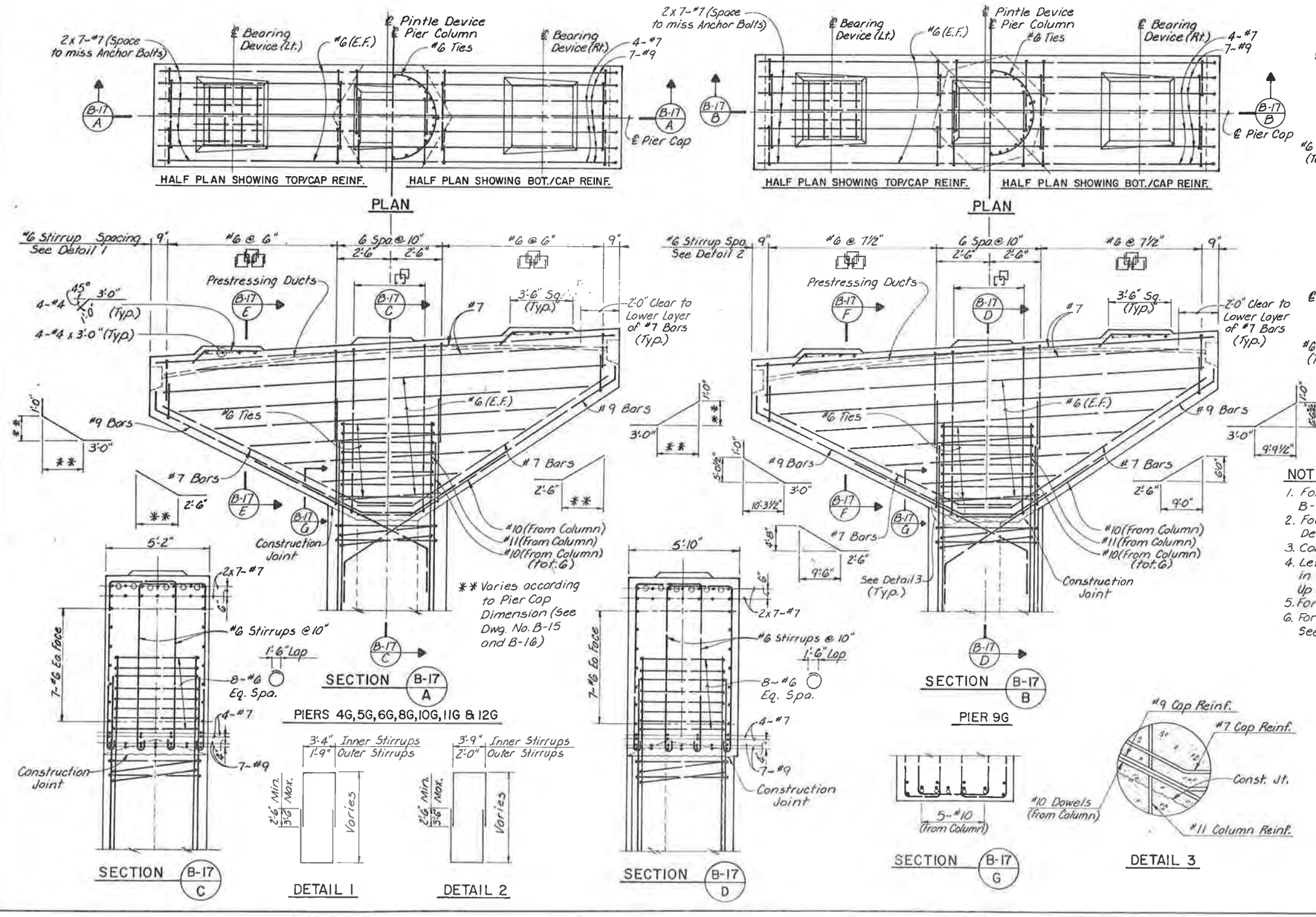

NOTES:

1. For Column Reinforcement See Dwgs. No. B-11 & B-14.
2. For Prestressing Details and other Pier Cap Details See Dwgs. No. B-15 & B-16.
3. Concrete for Pier Caps to be Concrete Class "S".
4. Left (Lt.) and Right (Rt.) Bearing Locations are in Reference to Pier Cap Side looking Towards Up Stationing.
5. For Pintle Device Details See Dwg. No. B-15.
6. For Location of Anchor Bolts For Bearings See Dwg. No. B-28.

INITIAL	DATE	CHECKED BY
DESIGNED BY JAB	10-87	
CHECKED BY JLS	12-3	
DETAILED BY DLK	10-87	

De Leuw, Cather & Company — Denver, CO

DIVISION OF HIGHWAYS

PIER CAP REINFORCEMENT

PIERS 4G THRU 6G AND 8G THRU 12G

Designer	J. Barraza	Structure Numbers	F-16-OL
Detailer	D. Kurschinski		
Drawing Number B-17		of 57	Drawings

Revision Dates (Preliminary Stage Only)

STATE OF COLORADO
STATE DEPARTMENT OF HIGHWAYS
DIVISION OF HIGHWAYS:
D. O. H. FORM NO. 126:
REV. FEB. 1984

AS CONSTRUCTED			
NO REVISIONS	REVISED	VOID	

FED. ROAD REGION	DIVISION	PROJ. NO	SHEET NO.	SHEET TOTALS
VIII	COLO.	IR 25-2(208)	108	

REVISIONS		

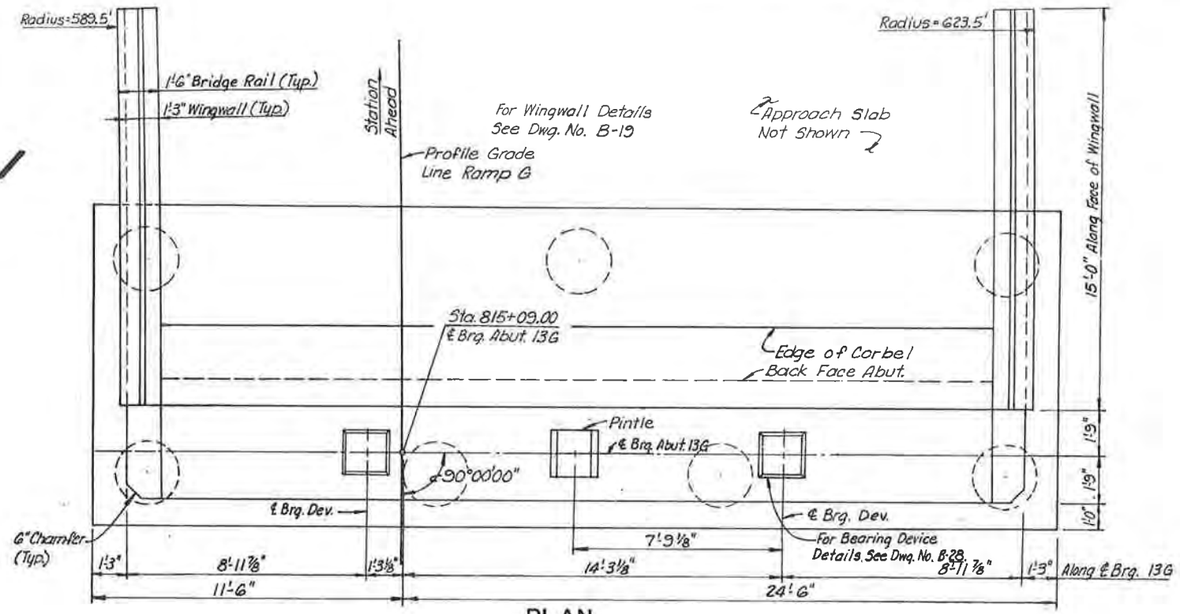

PLAN

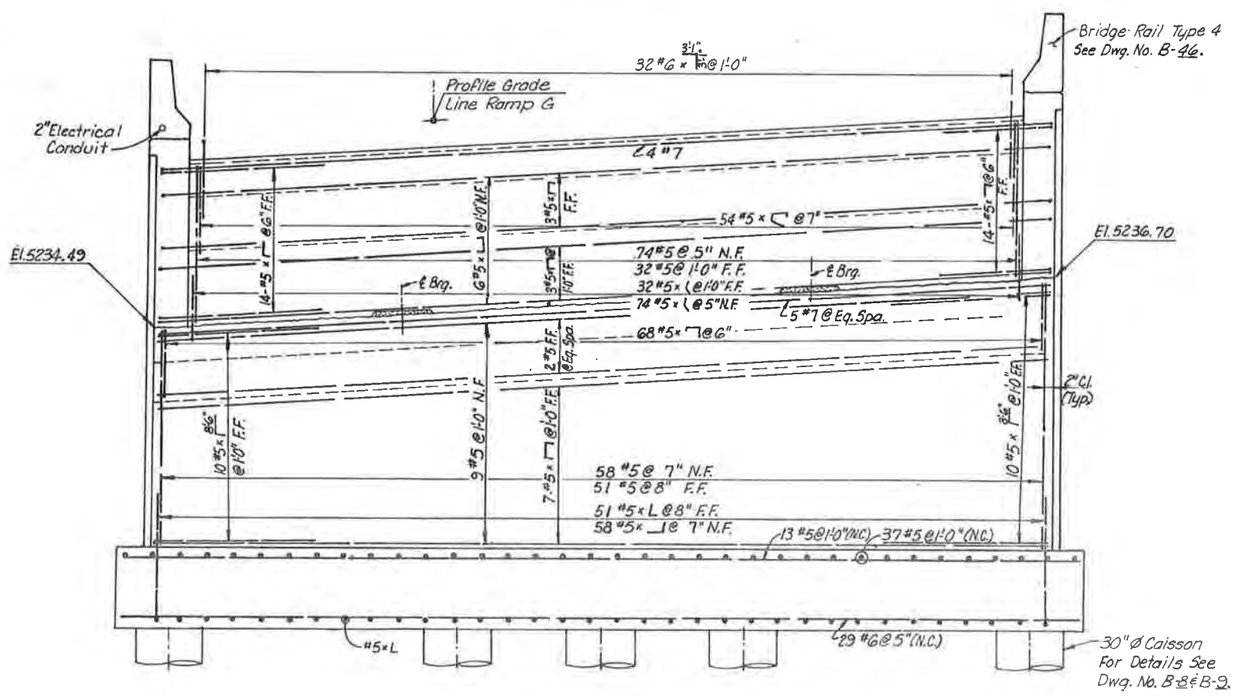

ELEVATION

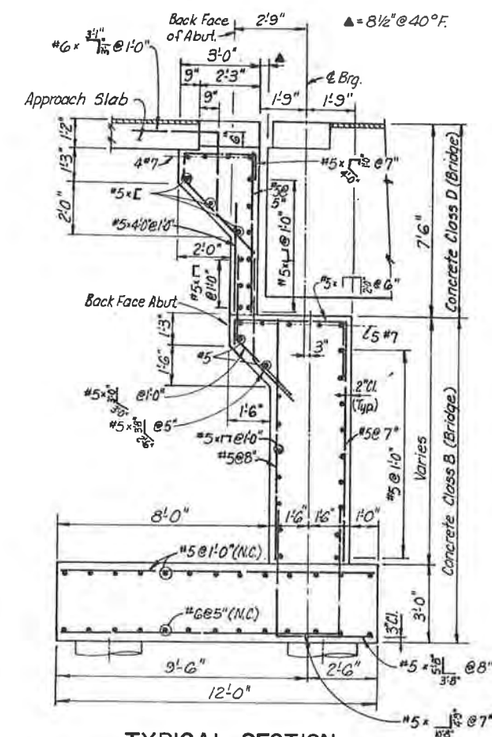

TYPICAL SECTION

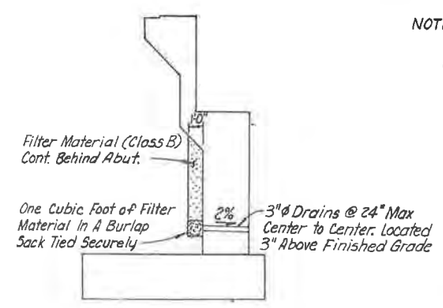

WEEP HOLE DETAIL

NOTES:
1. See Dwg. No. B-19 For Wingwall Details.
2. For Location of Anchor Bolts For Bearings See Dwg No. B-28.

	INITIAL	DATE	CHECKED
DESIGNED BY	S.S.J.	10-57	BAA 1-83
CHECKED BY	B.A.A.	1-83	
DETAILED BY	R.M.H.	10-57	

De Leuw, Cather & Company Denver, CO.

DIVISION OF HIGHWAYS

ABUTMENT 13G
DETAILS

Designer S.S. Jiang	Structure Numbers	F-16-OL
Detailer R. Hinshaw		
Drawing Number B-18	of 57	Drawings

Revision Dates (Preliminary Stage Only)

STATE OF COLORADO
STATE DEPARTMENT OF HIGHWAYS
DIVISION OF HIGHWAYS
D. U. H. FUND 1.1963
REV. FEB. 1964

AS CONSTRUCTED		
NO REVISIONS	REVISED	VOID

FED. ROAD REGION	DIVISION	PROJ. NO.	SHEET NO.	SHEET TOTALS
VIII	COLO.	IR 25-2(208)	109	

REVISIONS		

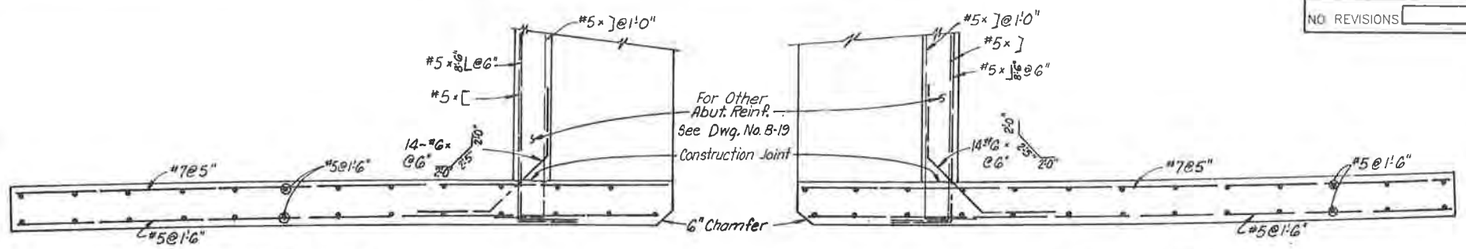

SECTION B-19 A

SECTION B-19 B

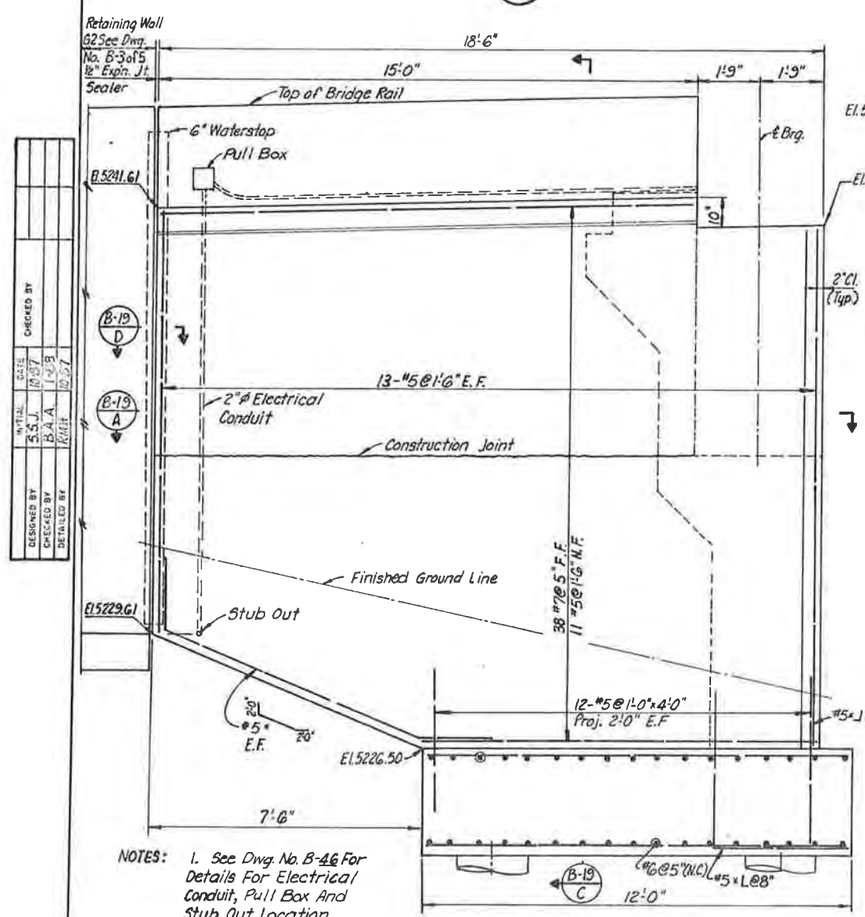

EAST WINGWALL

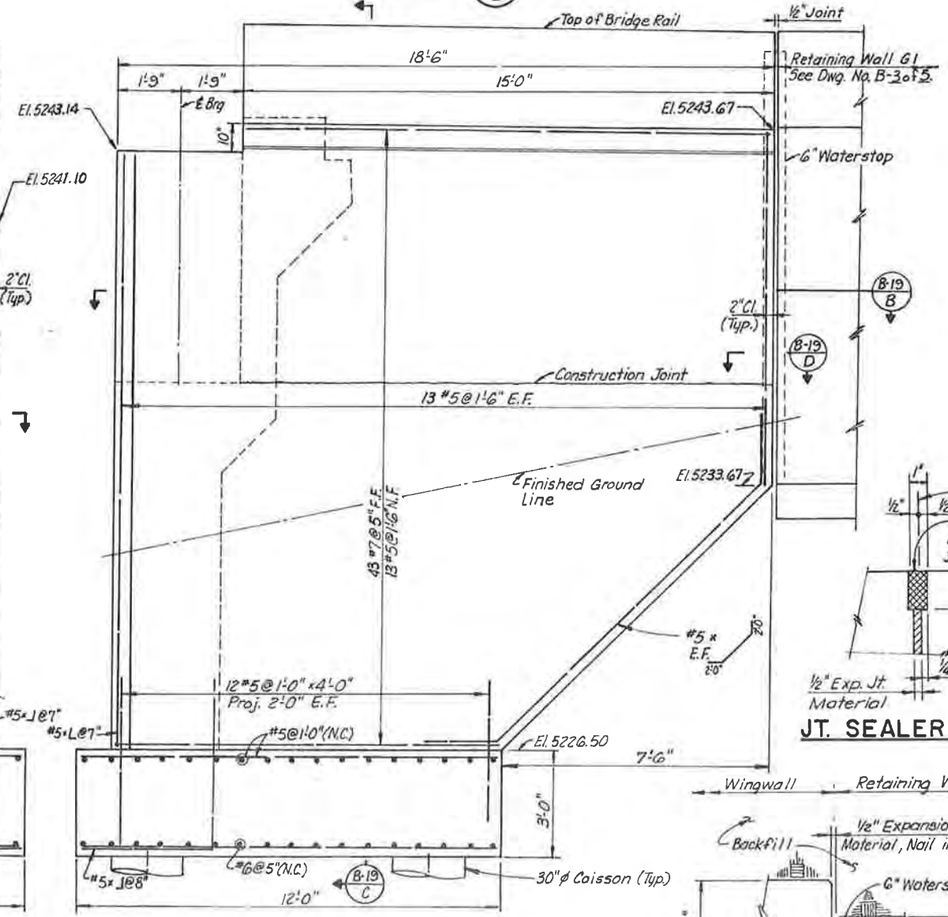

WEST WINGWALL

ELEVATION

NOTES:
1. See Dwg. No. B-46 For Details For Electrical Conduit, Pull Box And Stub Out Location.
2. For Other Details See Dwg. No. B-18.

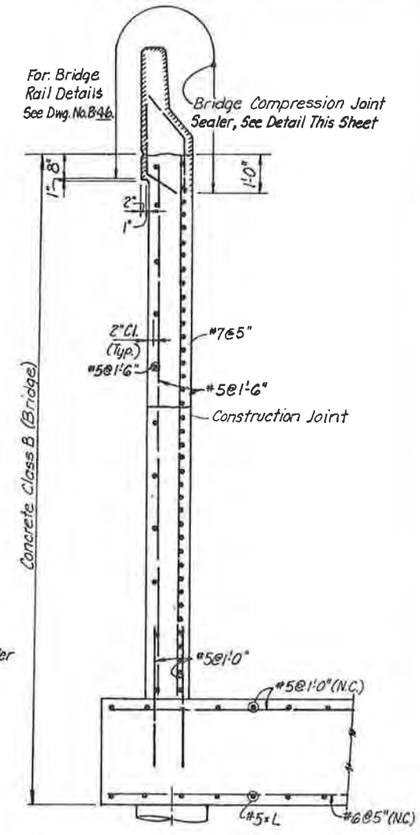

SECTION B-19 C

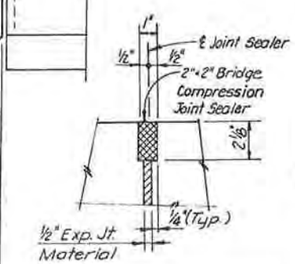

JT. SEALER DETAIL

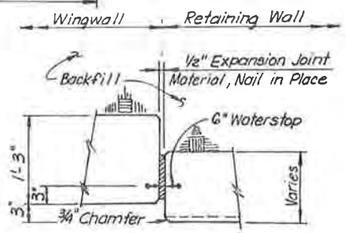

SECTION B-19 D

De Leuw, Cather & Company Denver, CO.

DIVISION OF HIGHWAYS

ABUTMENT 13G AND WINGWALL DETAILS

Designer S.S. Jiang		Structure Numbers	F-16-OL
Detailer R. Hinshaw			
Drawing Number B-19	of 57		Drawings

Revision Dates (Preliminary Stage Only)

MATERIAL	DATE
S.S.J.	10-57
B.A.A.	1-2-58
R.H.	10-57

DESIGNED BY S.S.J.
CHECKED BY B.A.A.
DETAILED BY R.H.
CHECKED BY

STATE OF COLORADO
STATE DEPARTMENT OF HIGHWAYS
DIVISION OF HIGHWAYS
D. O. H. FORM NO. 1261
REV. FEB. 1984

AS CONSTRUCTED		
NO REVISIONS	REVISED	VOID

FED. ROAD REGION	DIVISION	PROJ. NO.	SHEET NO.	SHEET TOTALS
VIII	COLO.	IR 25-2(208)	110	

REVISIONS

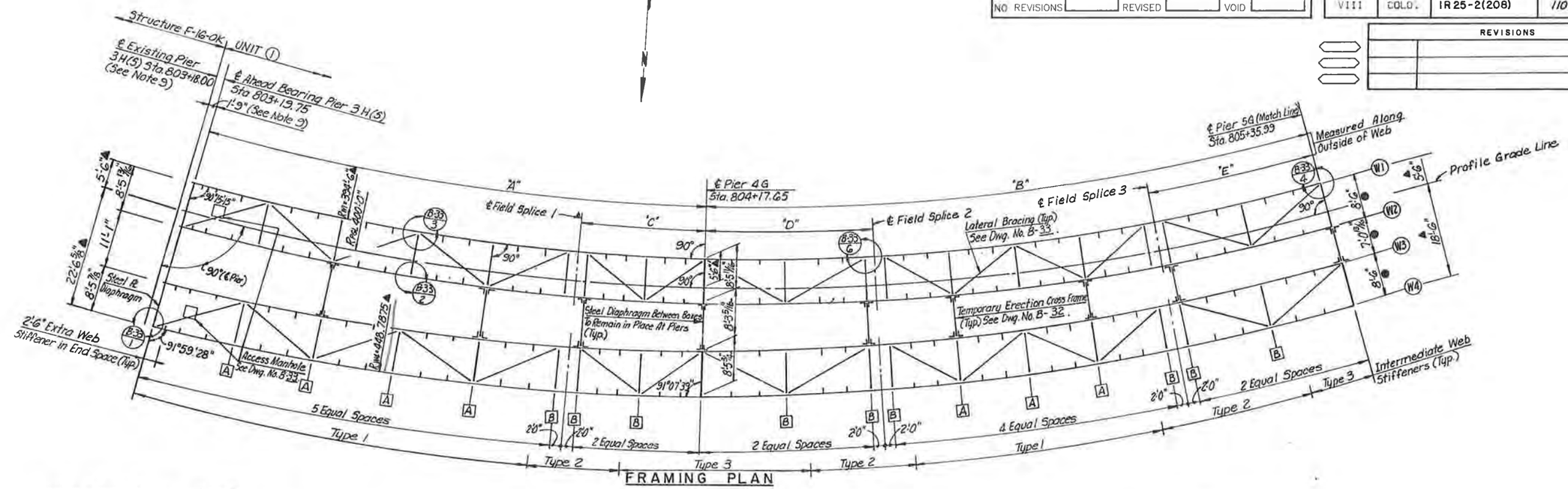

FRAMING PLAN

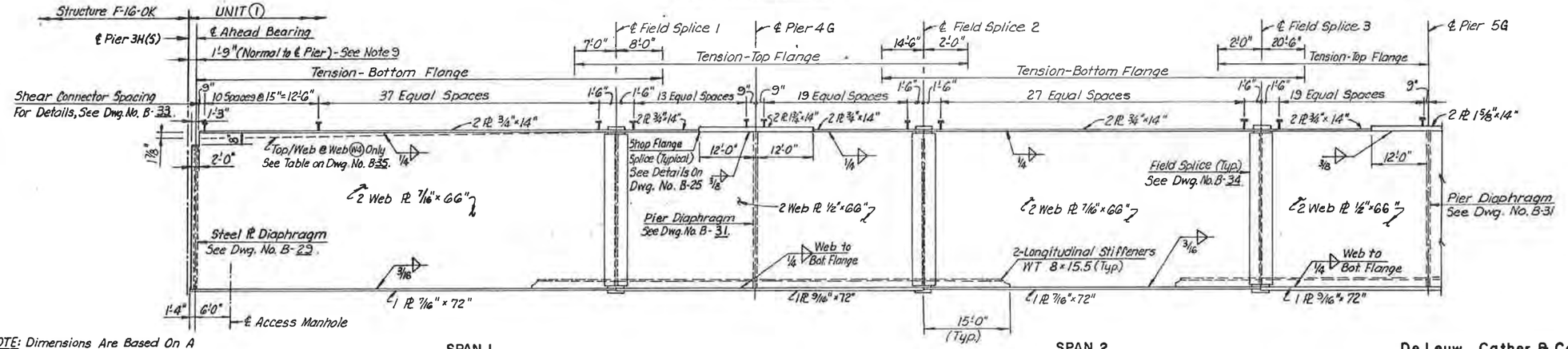

GIRDER ELEVATION

*NOTE: Dimensions Are Based On A Temperature of 40°F. Fabricator Shall Make Adjustments To Girder Lengths To Reflect Temperature At Fabrication Shop.

GIRDER DIMENSION SCHEDULE*

DIMENSION	"A"	"B"	"C"	"D"	"E"
WEB 1	96'-6 3/8"	116'-8 9/16"	23'-5 3/4"	31'-11 11/16"	32'-0 9/16"
PROFILE GRADE LINE	97'-10 13/16"	118'-4 1/16"	23'-9 5/8"	32'-5 1/16"	32'-5 15/16"
WEB 2	98'-7 11/16"	119'-2 5/8"	23'-11 3/16"	32'-8"	32'-8 7/8"
WEB 3	101'-0 13/16"	121'-5 1/4"	24'-5 15/16"	33'-3 3/4"	33'-3 3/4"
WEB 4	103'-2 3/16"	123'-11 5/16"	25'-0"	34'-0"	34'-0"

NOTES:

1. [A], [B] Denotes Location Of Cross Frames And Type.
2. Intermediate Stiffeners Shall Be Equally Spaced Between Cross Frames, Unless Otherwise Noted.
3. For Typical Details, See Dwg. No. B-32, B-33, & B-34.
4. All Plan Dimensions Are Shown On A Horizontal Plane Except Dimensions Marked With ●, Which Are Along The Sloped Plane of The Deck Slab.
5. Radii Shown Apply Between Piers 3G-5G Only. Radii For (W13) and (W14) Are Not Concentric.
6. For Typical Box Girder Section Dimensions, See Dwg No. B-25.
7. For Camber Of Girder Webs, See Dwg. No. B-35.
8. Dimensions Marked With ▲ Are To The Working Point. See Dwg. No. B-25 For Location of Working Points.
9. Dimensions And Stations On Existing Pier 3H(S) Are Based On Contract Plans For Proj. IR 25-2(191) And Shall Be Field Verified By The Contractor. Any Adjustment Necessary Shall Be Notified To The Engineer Before Submittal Of Shop Drawings For Fabrication of Steel Box Girder.

De Leuw, Cather & Company — Denver, CO.

DIVISION OF HIGHWAYS

FRAMING PLAN AND GIRDER ELEVATION

UNIT ①

Designer	J. Stapleton	Structure Numbers	F-16-OL
Detailer	R. Hinshaw		
Drawing Number B-20		of 57	Drawings

Revision Dates (Preliminary Stage Only)

DESIGNED BY J.L.S. 5-87
CHECKED BY J.A.B. 2-88
DETAILED BY R.M.H. 5-87
CHECKED BY

STATE OF COLORADO
STATE DEPARTMENT OF HIGHWAYS
DIVISION OF HIGHWAYS
D. O. H. FORM 1.126
REV. FEB. 1984

AS CONSTRUCTED		
NO REVISIONS	REVISED	VOID

FED. ROAD REGION	DIVISION	PROJ. NO.	SHEET NO.	SHEET TOTALS
VIII	COLO.	IR 25-2(208)	111	

REVISIONS		

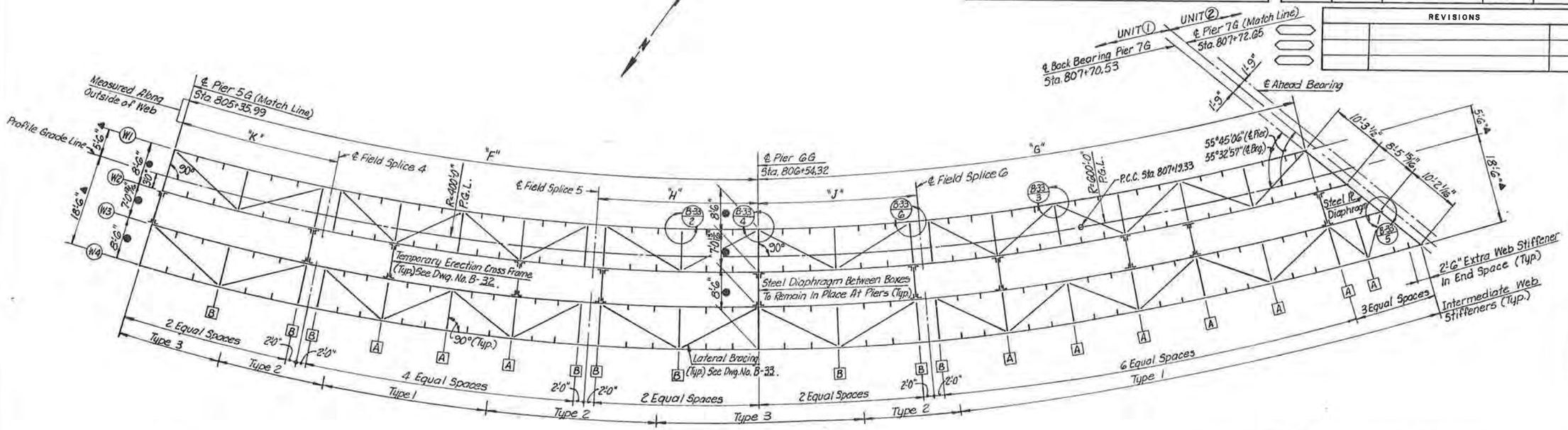

FRAMING PLAN

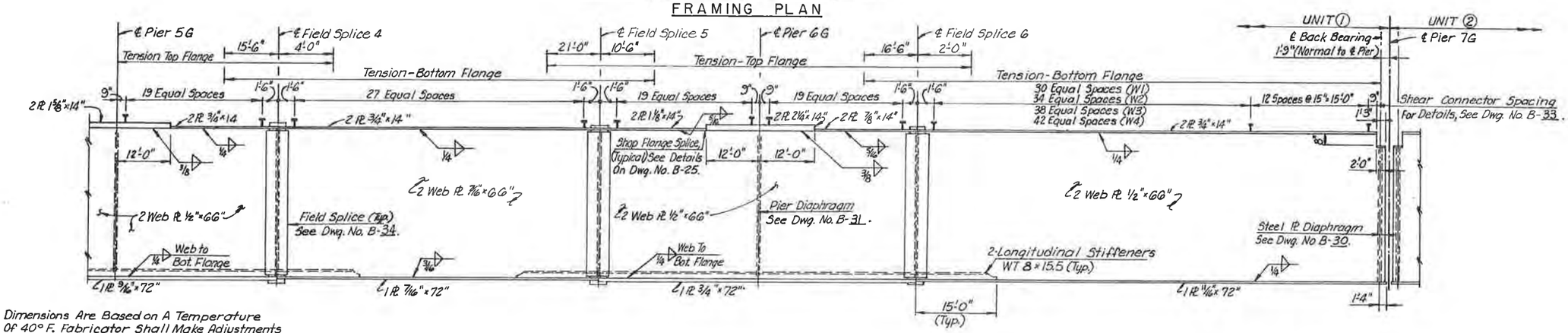

SPAN 3 SPAN 4

GIRDER ELEVATION

* NOTE: Dimensions Are Based on A Temperature Of 40° F. Fabricator Shall Make Adjustments To Girder Lengths To Reflect Temperature At Fabrication Shop.

GIRDER DIMENSION SCHEDULE *

DIMENSION	"F"	"G"	"H"	"J"	"K"
WEB 1	116'-8 7/16"	111'-0 13/16"	32'-0 5/8"	32'-0 5/8"	32'-0 5/8"
PROFILE GRADE LINE	118'-3 15/16"	116'-2 1/2"	32'-5 15/16"	32'-5 15/16"	32'-5 15/16"
WEB 2	119'-2 1/2"	118'-11 7/8"	32'-8 7/8"	32'-8 7/8"	32'-8 7/8"
WEB 3	121'-3 9/16"	125'-6 1/2"	33'-3 3/4"	33'-3 3/4"	33'-3 3/4"
WEB 4	123'-5 5/8"	133'-4 9/16"	34'-0"	34'-0"	34'-0"

NOTES:
1. [A], [B] Denotes Location Of Cross Frames And Type
2. Intermediate Stiffeners Shall Be Equally Spaced Between Cross Frames, Unless Otherwise Noted.
3. For Typical Details, See Dwg. No. B-32, B-33, & B-34
4. All Plan Dimensions Are Shown On A Horizontal Plane Except Dimensions Marked With ●, Which Are Along The Sloped Plane of The Deck Slab
5. All Webs Curve To Common Center With Profile Grade Line
6. For Typical Box Girder Section Dimensions, See Dwg. No B-25
7. For Camber Of Girders Webs, See Dwg. No. B-35.
8. Dimensions Marked With ▲ Are To The Working Point. See Dwg. No B-25. For Location Of Working Points.

DESIGNED BY	INITIAL	DATE
CHECKED BY	JLS	9-87
DETAILED BY	JAB	2-88
	RSH	9-87

CHECKED BY

De Leuw, Cather & Company Denver, CO.

DIVISION OF HIGHWAYS

FRAMING PLAN AND GIRDER ELEVATION

UNIT ①

Designer J Stapleton	Structure Numbers	F-16-OL
Detailer R. Hinshaw		
Drawing Number B-21	of 57	Drawings

Revision Dates (Preliminary Stage Only)

STATE OF COLORADO
STATE DEPARTMENT OF HIGHWAYS
DIVISION OF HIGHWAYS
D. O. H. FORM NO. 126
REV. FEB. 1964

AS CONSTRUCTED		
NO REVISIONS	REVISED	VOID

FED. ROAD REGION	DIVISION	PROJ. NO.	SHEET NO.	SHEET TOTALS
VIII	COLO.	IR 25-2(208)	112	

REVISIONS		

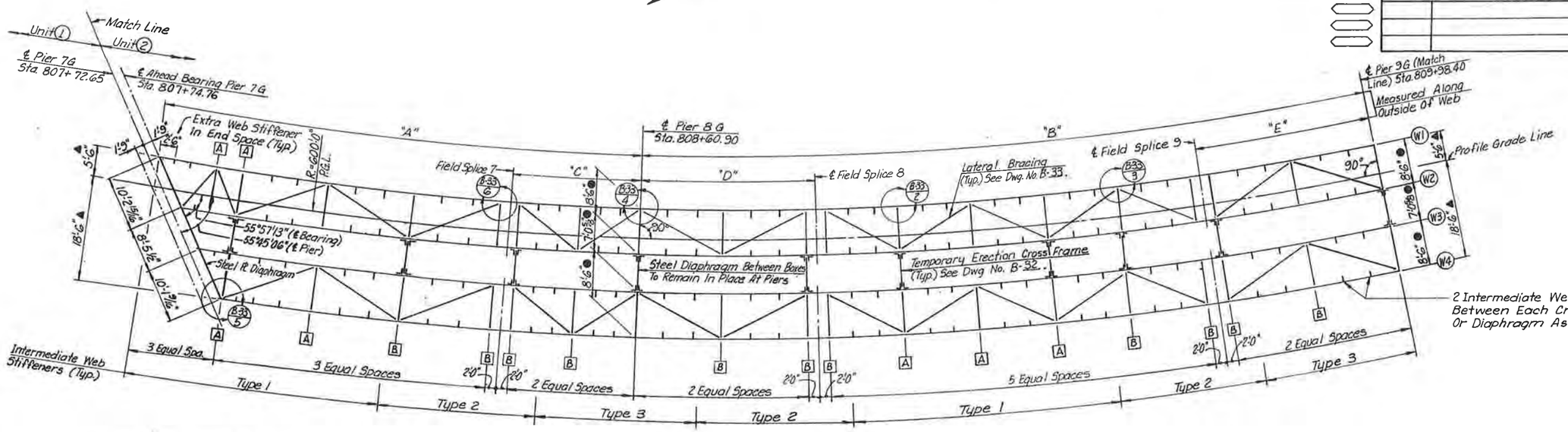

FRAMING PLAN

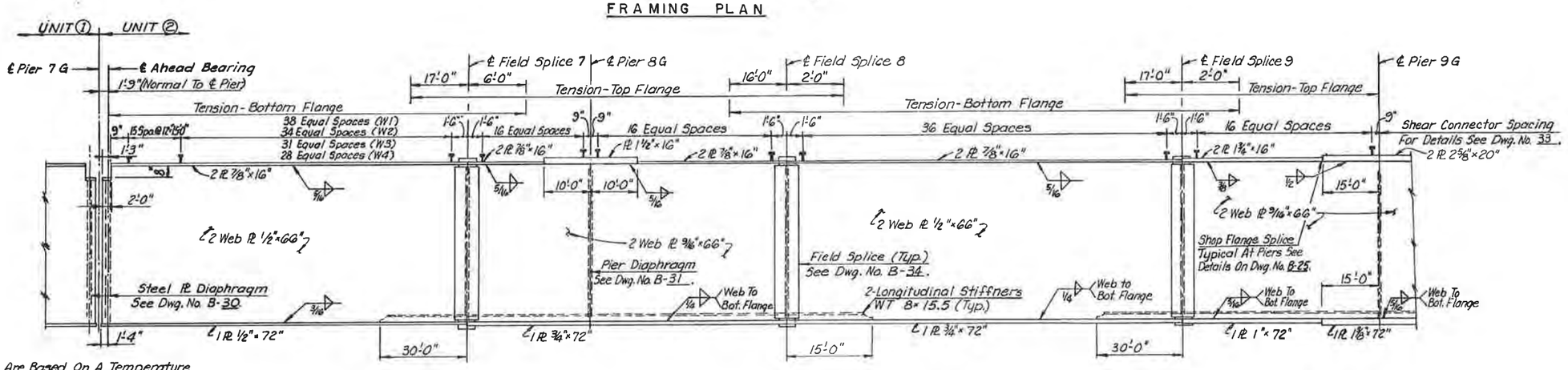

GIRDER ELEVATION

*NOTE: Dimensions Are Based On A Temperature Of 40°F. Fabricator Shall Make Adjustments To Girder Lengths to Reflect Temperature At Fabrication Shop.

GIRDER DIMENSION SCHEDULE *

DIMENSION	"A"	"B"	"C"	"D"	"E"
WEB 1	89'-0 13/16"	136'-2 7/8"	24'-0 3/8"	32'-8 3/16"	32'-8 3/16"
PROFILE GRADE LINE	86'-1 5/8"	137'-6"	24'-3"	32'-11 9/16"	32'-11 9/16"
WEB 2	84'-6 5/8"	138'-2 5/16"	24'-4 1/2"	33'-1 3/4"	33'-1 3/4"
WEB 3	80'-9 15/16"	139'-9 9/16"	24'-7 7/8"	33'-6 3/8"	33'-6 3/8"
WEB 4	76'-4 1/2"	141'-8 7/8"	25'-0"	34'-0"	34'-0"

NOTES:
1. [A], [B] Denotes Location Of Cross Frames And Type.
2. Intermediate Stiffeners Shall Be Equally Spaced Between Cross Frames, Unless Otherwise Noted.
3. For Typical Details, See Dwg. No. B-32, B-33, & B-34.
4. All Plan Dimensions Are Shown On A Horizontal Plane Except Dimensions Marked With ●, Which Are Along The Sloped Plane of the Deck Slab.
5. All Webs Curve to Common Center With Profile Grade Line.
6. For Typical Box Girder Section Dimensions, See Dwg. No. B-25.
7. For Camber Of Girder Webs, See Dwg. No. B-36.
8. Dimensions Marked With ▲ Are To The Working Point. See Dwg. No. B-25 For Location of Working Points.

	INITIAL	DATE	CHECKED BY
DESIGNED BY	JLS	9-87	
CHECKED BY	JAB	1-88	
DETAILED BY	RNH	9-87	

De Leuw, Cather & Company — Denver, CO.

DIVISION OF HIGHWAYS

FRAMING PLAN AND GIRDER ELEVATION

UNIT 2

Designer	J. Stapleton	Structure Numbers	F-16-OL
Detailer	R. Hinshaw		
Drawing Number B-22	of 57	Drawings	

Revision Dates (Preliminary Stage Only)

STATE OF COLORADO
STATE DEPARTMENT OF HIGHWAYS
DIVISION OF HIGHWAYS
D. O. H. FORM NO. 1261
REV. FEB. 1984

AS CONSTRUCTED		
NO REVISIONS	REVISED	VOID

FED. ROAD REGION	DIVISION	PROJ. NO.	SHEET NO.	SHEET TOTALS
VIII	COLO.	IR 25-2(208)	1/3	

REVISIONS		

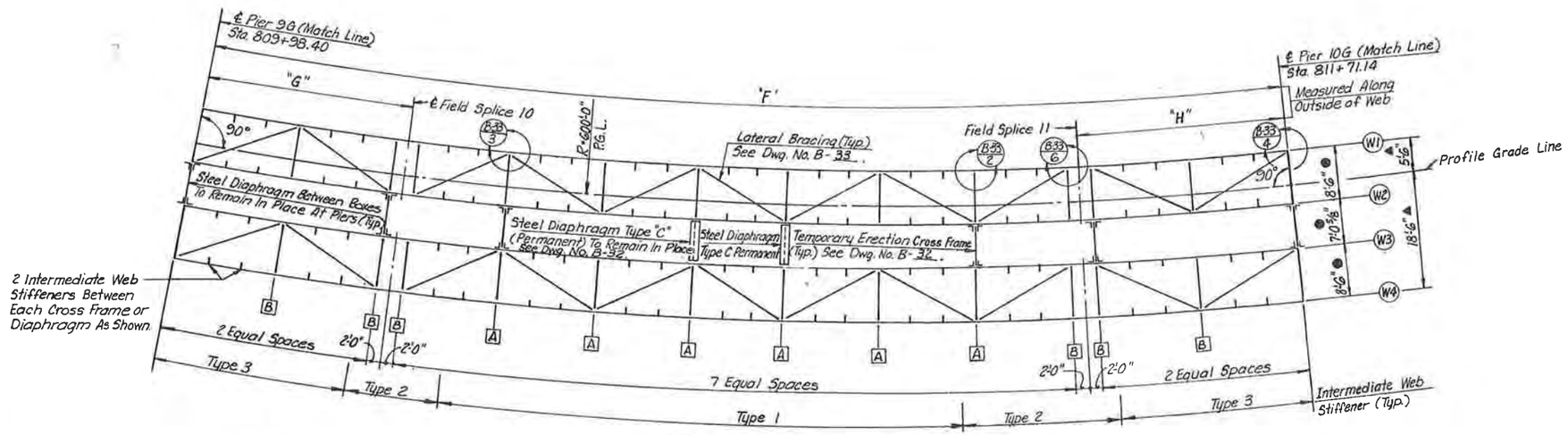

FRAMING PLAN

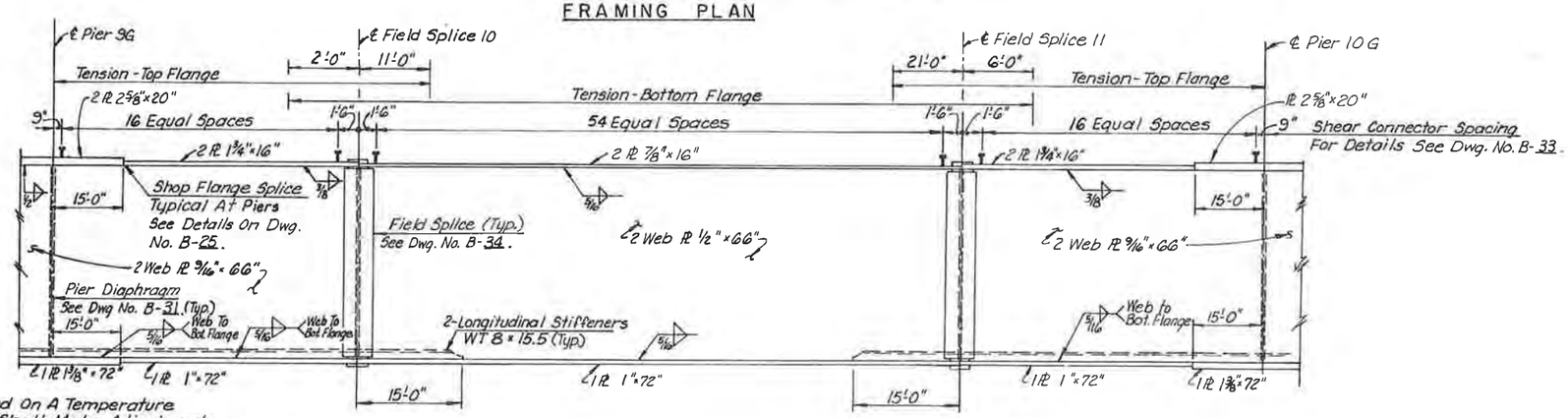

SPAN 7

GIRDER ELEVATION

* NOTE: Dimensions Are Based On A Temperature Of 40°F. Fabricator Shall Make Adjustments To Girder Lengths To Reflect Temperature At Fabrication Shop.

NOTES:

1. A, B Denotes Location Of Cross Frames And Type.
2. Intermediate Stiffeners Shall Be Equally Spaced Between Cross Frames, Unless Otherwise Noted.
3. For Typical Details, See Dwg No. B-32, B-33 & B-34.
4. All Plan Dimensions Are Shown On A Horizontal Plane Except Dimensions Marked With ●, Which Are Along The Slope Plane Of The Deck Slab.
5. All Webs Curve To Common Center With Profile Grade Line.
6. For Typical Box Girder Section Dimensions, See Dwg. No. B-25.
7. For Camber Of Girder Webs, See Dwg. No. B-36.
8. Dimensions Marked With ▲ Are To The Working Point. See Dwg. No. B-25 For Location of Working Points.

GIRDER DIMENSION SCHEDULE*

DIMENSION	"F"	"G"	"H"
WEB 1	171'-1 7/8"	32'-8 3/16"	32'-8 3/16"
PROFILE GRADE LINE	172'-8 7/8"	32'-11 13/16"	32'-11 13/16"
WEB 2	173'-7 9/16"	33'-1 3/16"	33'-1 3/4"
WEB 3	175'-7 1/2"	33'-6 3/8"	33'-6 3/8"
WEB 4	178'-0 9/16"	34'-0"	34'-0"

	INITIAL	DATE	CHECKED BY
DESIGNED BY			
CHECKED BY	J.L.S.	9-87	
DETAILED BY	J.A.B.	1-88	
DETAILED BY	R.H.H.	9-87	

De Leuw, Cather & Company — Denver, CO.

DIVISION OF HIGHWAYS

FRAMING PLAN AND GIRDER ELEVATION

UNIT ②

Designer J. Stapleton		Structure Numbers	F-16-OL
Detailer R. Hinshaw			
Drawing Number B-23	of 57	Drawings	

Revision Dates (Preliminary Stage Only)

STATE OF COLORADO
STATE DEPARTMENT OF HIGHWAYS
DIVISION OF HIGHWAYS
D. O. H. FORM NO. 1261
REV. FEB. 1984

AS CONSTRUCTED		
NO. REVISIONS	REVISED	VOID

FED. ROAD REGION	DIVISION	PROJ. NO.	SHEET NO.	SHEET TOTALS
VIII	COLO.	IR 25-2(208)	114	

REVISIONS		

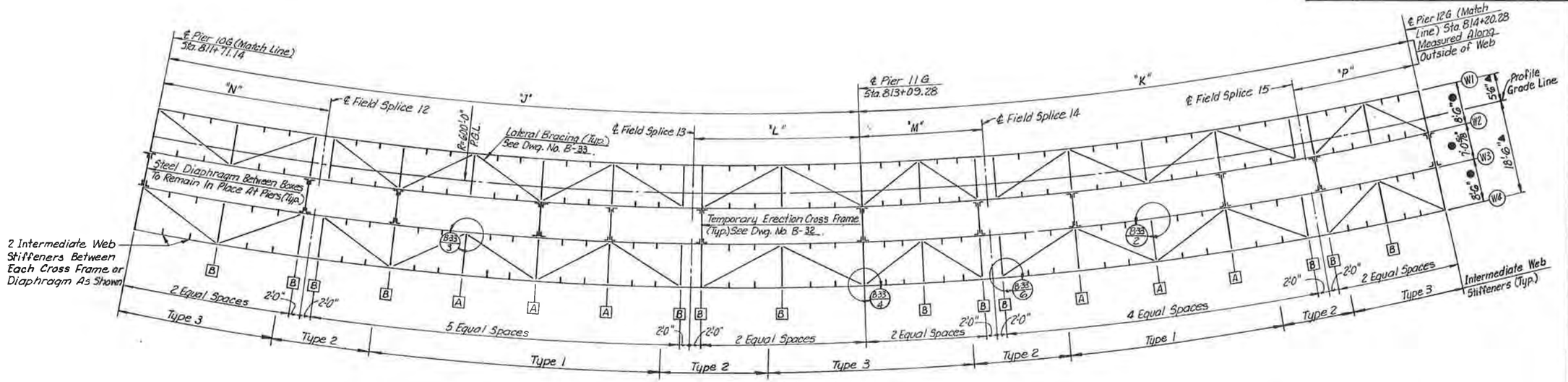

FRAMING PLAN

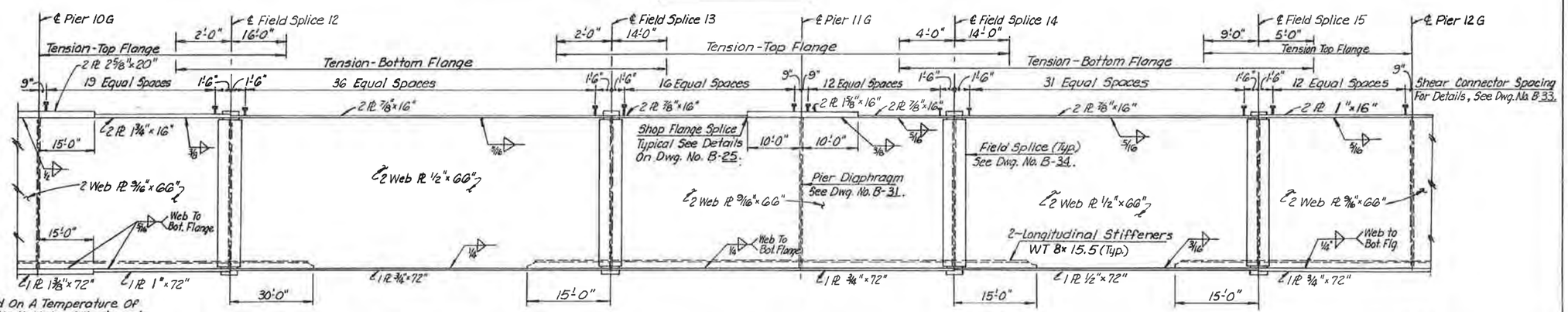

SPAN 8 SPAN 9

GIRDER ELEVATION

* NOTE: Dimension Are Based On A Temperature Of 40°F Fabricator Shall Make Adjustments To Girder Lengths To Reflect Temperature At Fabrication Shop.

GIRDER DIMENSION SCHEDULE *

DIMENSION	"J"	"K"	"L"	"M"	"N"	"P"
WEB 1	136'-10 1/2"	109'-11 13/16"	32'-8 3/16"	24'-0 3/8"	32'-8 3/16"	24'-0 3/8"
PROFILE GRADE LINE	138'-1 11/16"	111'-0"	32'-11 3/16"	24'-3"	32'-11 3/16"	24'-3"
WEB 2	138'-9 5/16"	111'-6 5/8"	33'-1 3/4"	24'-4 1/2"	33'-1 3/4"	24'-4 1/2"
WEB 3	140'-5 3/16"	112'-10 1/4"	33'-6 3/8"	24'-7 7/8"	33'-6 3/8"	24'-7 7/8"
WEB 4	142'-4 9/16"	114'-5 11/16"	34'-0"	25'-0"	34'-0"	25'-0"

NOTES:
1. [A], [B] Denotes Location Of Cross Frames And Type.
2. Intermediate Stiffeners Shall Be Equally Spaced Between Cross Frames, Unless Otherwise Noted.
3. For Typical Details, See Dwg. No. B-32, B-33 & B-34.
4. All Plan Dimensions Are Shown On A Horizontal Plane Except Dimensions Marked With ●, Which Are Along The Sloped Plane of The Deck Slab.
5. All Webs Curve To Common Center With Profile Grade Line.
6. For Typical Box Girder Section Dimensions, See Dwg. No. B-25.
7. For Camber Of Girder Webs, See Dwg. No. B-36.
8. Dimensions Marked With ▲ Are To The Working Point. See Dwg. No. B-25 For Location of Working Points.

	INITIAL	DATE	CHECKED BY
DESIGNED BY	J.L.S.	9-87	
CHECKED BY	J.A.B.	1-88	
DETAILED BY	R.D.H.	9-87	

De Leuw, Cather & Company Denver, CO

DIVISION OF HIGHWAYS

FRAMING PLAN AND GIRDER ELEVATION

UNIT ②

Designer J. Stapleton	Structure Numbers	F-16-OL
Detailer R. Hinshaw		
Drawing Number B-24	of 57	Drawings

Revision Dates (Preliminary Stage Only)

STATE OF COLORADO
STATE DEPARTMENT OF HIGHWAYS
DIVISION OF HIGHWAYS
D. O. H. FORM NO. 126
REV. FEB. 1984

AS CONSTRUCTED		
NO REVISIONS	REVISED	VOID

FED. ROAD REGION	DIVISION	PROJ. NO.	SHEET NO.	SHEET TOTALS
VIII	COLO.	IR 25-2(208)	115	

REVISIONS		

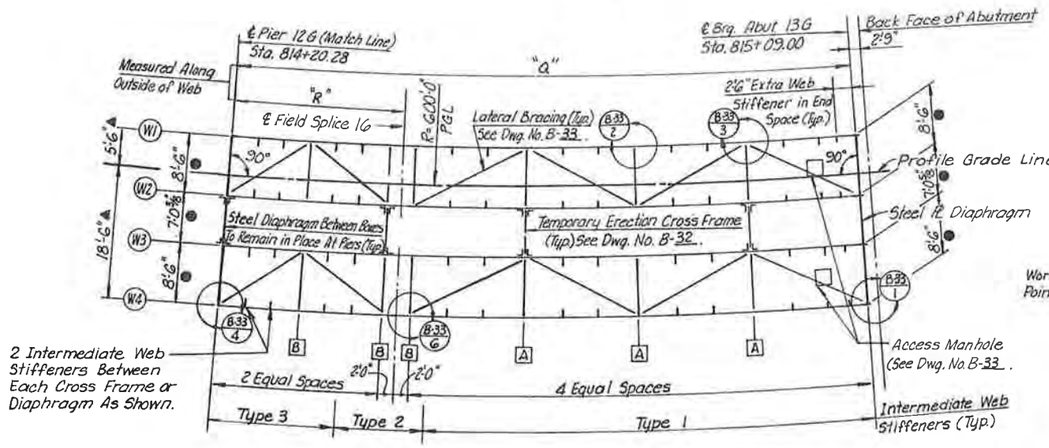

FRAMING PLAN

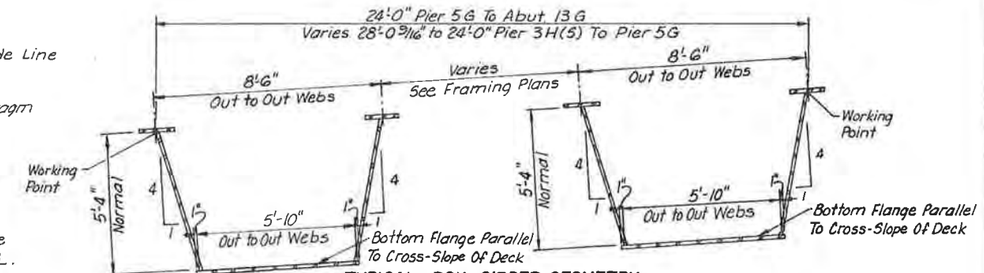

TYPICAL BOX GIRDER GEOMETRY

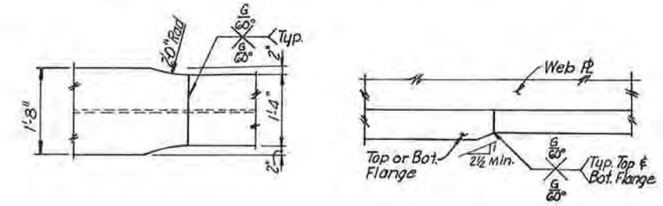

PLAN
Top Flange Only

ELEVATION

SHOP FLANGE SPLICE DETAIL

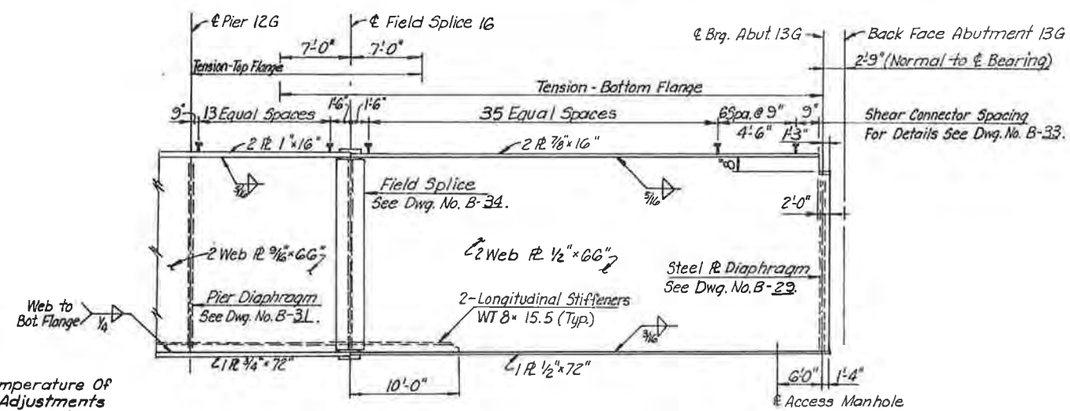

SPAN 10

GIRDER ELEVATION

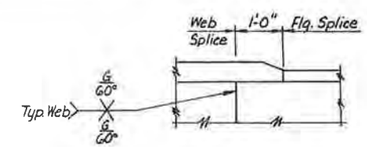

SHOP SPLICES OFFSET DETAIL

NOTE: All Butt Welds For Materials Of Equal Thicknesses Shall Be Ground Flush.

* NOTE: Dimensions Are Based On A Temperature Of 40°F. Fabricator Shall Make Adjustments To Girder Lengths To Reflect Temperature At Fabrication Shop.

GIRDER DIMENSION SCHEDULE*

DIMENSION	"Q"	"R"
WEB 1	87'-10 7/8"	24'-0 3/8"
PROFILE GRADE LINE	88'-8 5/8"	24'-3"
WEB 2	89'-1 5/16"	24'-4 1/2"
WEB 3	90'-2 11/16"	24'-7 7/8"
WEB 4	91'-5 7/16"	25'-0"

NOTES:
1. [A], [B] Denotes Location Of Cross Frames And Type.
2. Intermediate Stiffeners Shall Be Equally Spaced Between Cross Frames, Unless Otherwise Noted.
3. For Typical Details, See Dwg. No. B-32, B-33 & B-34.
4. All Plan Dimensions Are Shown On A Horizonal Plane Except Dimensions Marked With ●, Which Are Along The Sloped Plane of The Deck Slab.
5. All Webs Curve To Common Center With Profile Grade Line.
6. For Typical Box Girder Section Dimensions, See Dwg. No. B-25.
7. For Camber Of Girder Webs, See Dwg No. B-36.
8. Dimensions Marked With ▲ Are To The Working Point.

DESIGNED BY	J.L.S.	9-87	CHECKED BY
CHECKED BY	J.A.B.	1-88	
DETAILED BY	R.M.H.	9-87	

De Leuw, Cather & Company — Denver, CO.

DIVISION OF HIGHWAYS

FRAMING PLAN AND GIRDER ELEVATION

UNIT ②

Designer J. Stapleton	Structure Numbers	F-16-OL
Detailer R. Hinshaw		
Drawing Number B-25 of 57 Drawings		

Revision Dates (Preliminary Stage Only)

STATE OF COLORADO
STATE DEPARTMENT OF HIGHWAYS
DIVISION OF HIGHWAYS:
D. O. H. FORM NO. 126:
REV. FEB. 1984

AS CONSTRUCTED		
NO REVISIONS ☐	REVISED ☐	VOID ☐

FED. ROAD REGION	DIVISION	PROJ. NO.	SHEET NO.	SHEET TOTALS
VIII	COLO.	IR25-2(208)	116	

REVISIONS		

CONSTRUCTION SEQUENCE:

1. Construction of foundation and column for Pier 7G and column for Pier 9G shall be as directed by the engineer to minimize the time required for temporary lane closures on I-25 and 6th Avenue.
2. Post-tensioning of pier caps shall not be performed over lanes open to traffic. No permanent loads shall be applied on the piers before 24 hours after completion of prestressing tendon grouting and before concrete in pier cap has obtained its 28-day strength.
3. Erection of box girders and splicing of girders above I-25 NB & SB and 6th Avenue shall be limited to off-peak night hours, as per Special Provisions.
4. Welding of bearing sole plate to girder bottom flange at Piers 5G, 9G, 10G & 11G shall be done at ambient temperatures between 30 and 60 degrees F.
5. Deck slab to be poured according to slab pouring sequence shown in this drawing, and the Special Provisions.
6. Removal of temporary cross frames & construction bracing shall not be done before the concrete in slab has obtained its 28-day strength.

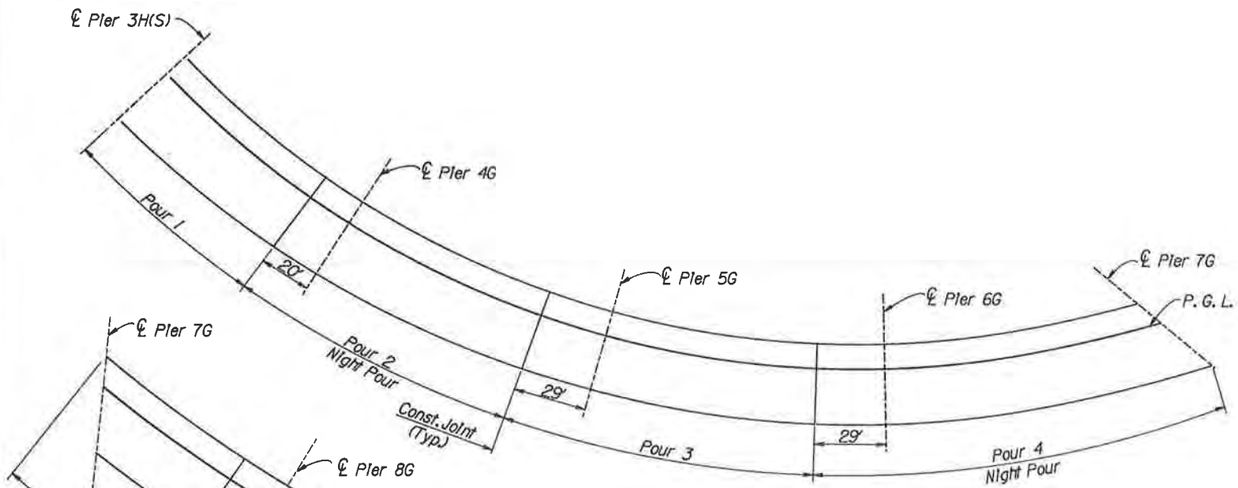

POURING SCHEDULE - UNIT 1

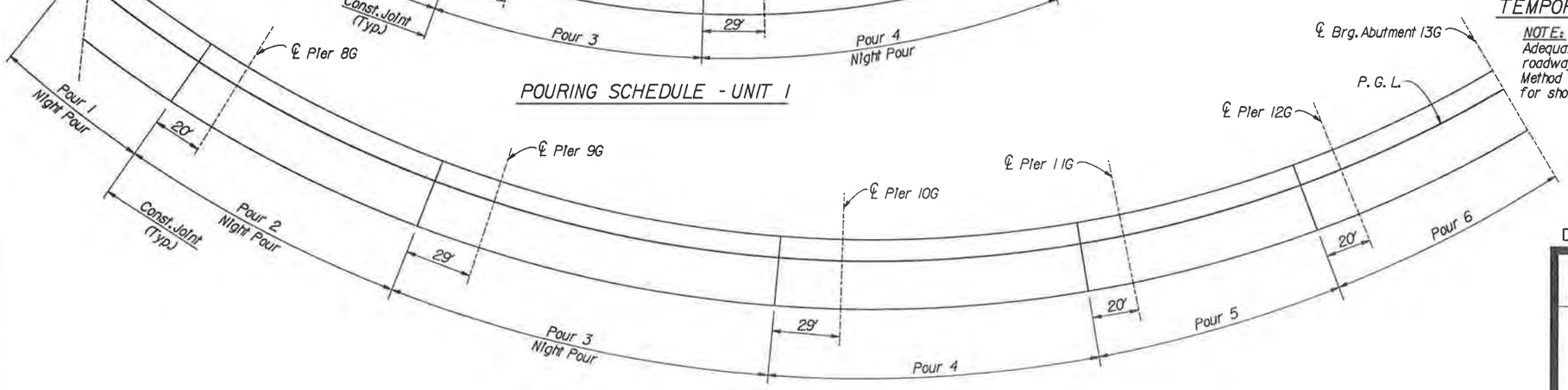

POURING SCHEDULE - UNIT 2

Note:
Pour Concrete in the Sequence Shown.
Pours Over Existing Ramps and Over I-25 and 6th Ave. Shall be at Night.

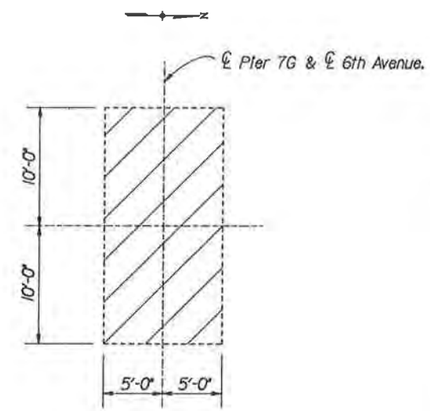

LIMITS OF EXCAVATION FOR PIER 7G

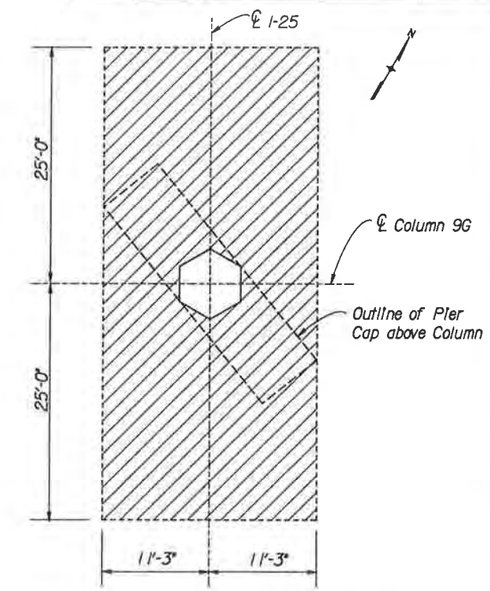

LIMITS FOR PLACEMENT OF TEMPORARY SUPPORTS AT PIER 9G

NOTE:
Adequate shoring of the excavation adjacent to existing roadways shall be provided during all phases of construction. Method of shoring shall be submitted to the Engineer. Payment for shoring to be included in Item 206, Structure Excavation.

	INITIAL	DATE	CHECKED BY
DESIGNED BY	J. L. S.	1-87	
CHECKED BY	J. A. B.	2-87	
DETAILED BY	S. S.	11-87	

DeLeuw, Cather & Company Denver, CO.

DIVISION OF HIGHWAYS

ERECTION PROCEDURE

Designer	J. L. Stapleton	Structure Numbers	F-16-OL
Detailer	S. Shibao		

Drawing Number B-26 of 57 Drawings

Revision Dates (Preliminary Stage Only)

UD:f100.3120BERECT.DGN;1
UDA:PLOTS\B26.PRF
DATE 14-APR-1988 - TIME 07:14

STATE OF COLORADO
STATE DEPARTMENT OF HIGHWAYS
DIVISION OF HIGHWAYS
D. O. H. FORM NO. 117
REV. APR. 1956

AS CONSTRUCTED		
NO REVISIONS	REVISED	VOID

FEDERAL ROAD REGION NO.	DIVISION	PROJECT NUMBER	SHEET NUMBER
	COLORADO	IR25-2(208)	117

REVISIONS		

B-512-3

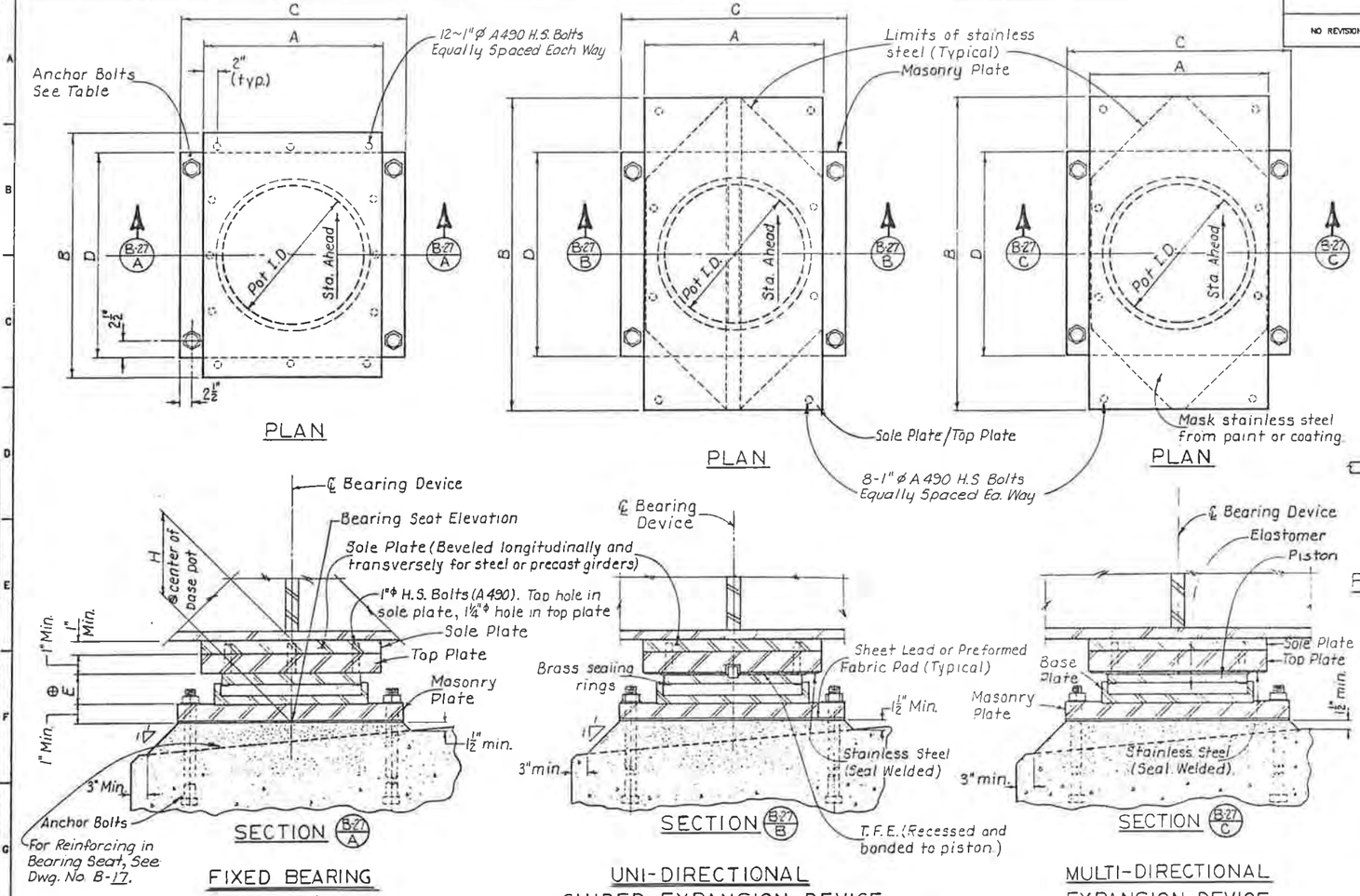

FIXED BEARING
(Type F)

UNI-DIRECTIONAL GUIDED EXPANSION DEVICE
(Type G)

MULTI-DIRECTIONAL EXPANSION DEVICE
Type E
(Similar to Type G)

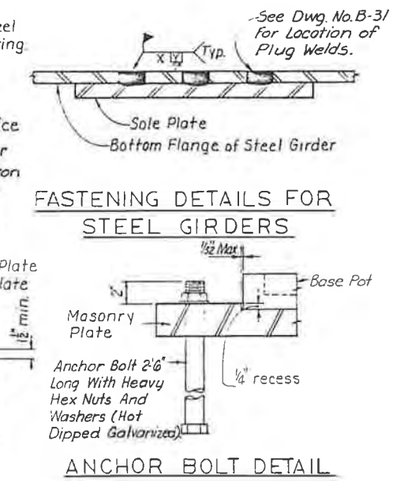

FASTENING DETAILS FOR STEEL GIRDERS

ANCHOR BOLT DETAIL

"E" is specific for bearing device supplied (III(A), III(B) and III(C). See Special Provisions

UNIT (1)

Values for one bearing device

Location	Qty.	Type	Angle θ (Degrees)	Vertical Load (K) Perm. D.L.	Vertical Load (K) Max. Load	Horizontal Load (K) Longit.	Horizontal Load (K) Transv.	Longitud. Movement (Inches)	Initial Longitud. Offset (Inches)	Conc. Girder No. / Studs	Steel Girder No. Plug Welds	Rotation (Radians)	X-Slope % Looking Sta. Ah'd.	Grade % + Sta. Ah'd.	Masonry Base Plate C	Masonry Base Plate D	Anchor Bolts Size	Anchor Bolts No.	Anchor Bolts Type	Top Plate or Sole Plate A	Top Plate or Sole Plate B	Base Pot I.D.	Height H
Pier 3H(S) Lt.	1	G	105°43'55"	120	230	0	64	2½"			12	0.0043	5.026	4.582	26"	26"	1½"Φ	4	A588	18"	18"	12"	9¼"
Pier 3H(S) Rt.	1	E	90°00'00"	130	240	0	0	2½"			12	0.0042	6.851	6.284	28"	24"	1½"Φ	4		18"	18"	12"	9¼"
Pier 4G Lt.	1	G	98°28'34"	420	550	0	88	1⅜"			12	0.0043	6.698	2.962	38"	32"	1½"Φ	4		21⅛"	18¼"	15"	11¼"
Pier 4G Rt.	1	E	90°00'00"	430	790	0	0	1⅜"			12	0.0042	8.062	3.494	32"	36"	1½"Φ	4		20⅝"	20⅝"	17"	11¼"
Pier 5G	2	F	90°00'00"	380	710	188	188	0			12	0.0043	7.500	2.071	36"	28"	2"Φ	6		21"	21⅝"	18"	9¾"
Pier 6G Lt.	1	G	81°31'27"	460	610	0	57	1⅜"			12	0.0078	7.332	1.681	32"	24"	1½"Φ	4		21⅛"	18¼"	15"	11¼"
Pier 6G Rt.	1	E	90°00'00"	500	900	0	0	1⅜"			12	0.0072	7.500	0.559	32"	24"	1½"Φ	4		21⅝"	21⅝"	18¼"	11¼"
Pier 7G(Bk) Lt.	1	G	40°49'34"	180	360	0	4	2⅝"			12	0.0078	8.051	+1.043	28"	28"	1½"Φ	4		18"	18"	12"	9¼"
Pier 7G(Bk) Rt.	1	E	90°00'00"	150	320	0	0	2⅝"			12	0.0072	5.165	-4.794	24"	24"	1½"Φ	4	A588	18"	18"	12"	9¼"

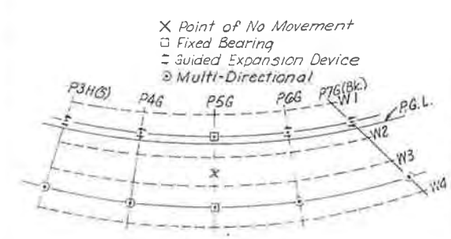

ORIENTATION PLAN UNIT (1)

NOTES:

All structural steel for the bearing devices, including sole plates, top plates and masonry plates, shall be AASHTO M183 (ASTM A36) unless otherwise shown.

Anchorages shall be included in bid price for Item No. 512, Bearing Device (Type III).

Bearing seat elevations at abutments and piers shall be checked and adjusted according to the final dimensions of bearing assemblies adopted.

Bearing assemblies shall be constructed so as to permit removal for repair or replacement by jacking the bridge from the seat by ⅜" or less.

Without alteration of connector sizes and locations, the contractor may propose using other similar bearings which meet the requirements given on this drawing and in the special provisions, subject to engineers approval. "H" shall be at least 7".

The longitudinal movement tabulated is based on a total temperature change of 140°F (70°F rise and 70°F drop from a mean temperature of 40°F) and effect due to prestress, shrinkage and creep, if concrete girder. The bearing device shall have a minimum of 2" additional movement capacity longitudinally each way from centerline of base plate.

All surfaces of structural steel components not connected to stainless steel, T.F.E. or elastomer shall be completely zinc metalized in accordance with AWS C.2.2. latest issue, to a minimum thickness 8 mils on exposed surfaces and 3 mils on protected surfaces.

Keyway shown in Section B is schematic. Contractor may supply side guide bars as alternate.

Side guide bars must bear only against upper elements and not against lower element (Base Pot)

Anchor bolts may be set, either in the wet concrete of bearing seat or placed within a formed cylindrical void 4" in diameter and then grouted with high strength non-shrink or epoxy grout.

De Leuw, Cather & Company — Denver, CO.

DIVISION OF HIGHWAYS

BEARING DEVICE

TYPE III)

Designer	B. Arrighi	Structure Numbers	F-16-OL
Detailer	R. Hinshaw		
Drawing Number B-27		of 57	Drawings

Checked By	Checked By	Designed By	Checked By	Detailed By
INITIAL	DATE			
B.A.A.	1-88			
J.L.S.	1-88			
P.M.H.	1-88			

Revision Dates (Preliminary Stage Only)

STATE OF COLORADO
STATE DEPARTMENT OF HIGHWAYS
DIVISION OF HIGHWAYS
D. C. H. FORM 4.126
REV. FEB. 1964

AS CONSTRUCTED			
NO. REVISIONS	REVISED	VOID	

FED. ROAD REGION	DIVISION	PROJ. NO.	SHEET NO.	SHEET TOTALS
VIII	COLO.	IR 25-2 (208)	118	

REVISIONS		

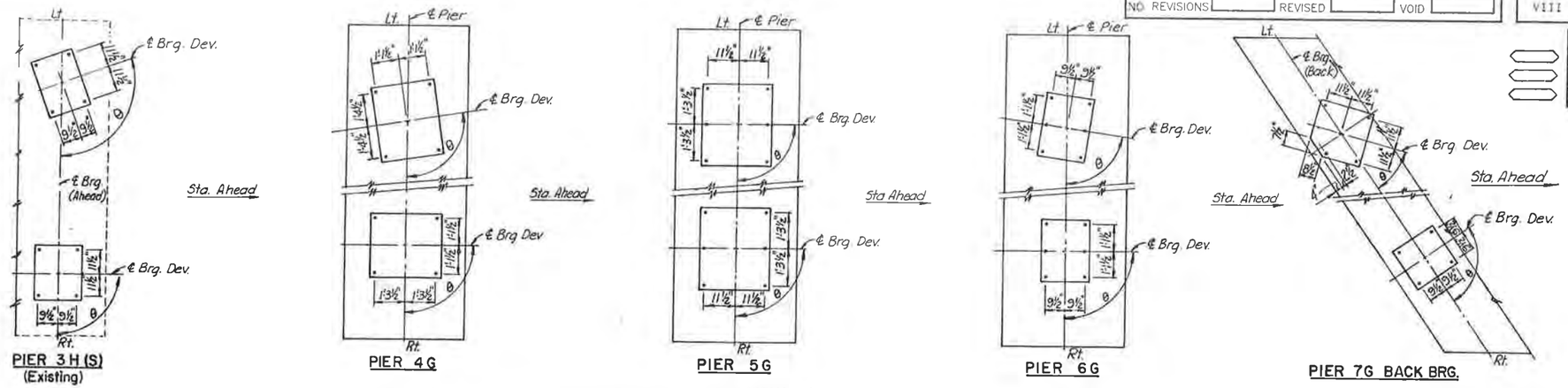

PIER 3H(S) (Existing) — PIER 4G — PIER 5G — PIER 6G — PIER 7G BACK BRG.

UNIT 1 BEARING DEVICE PLANS

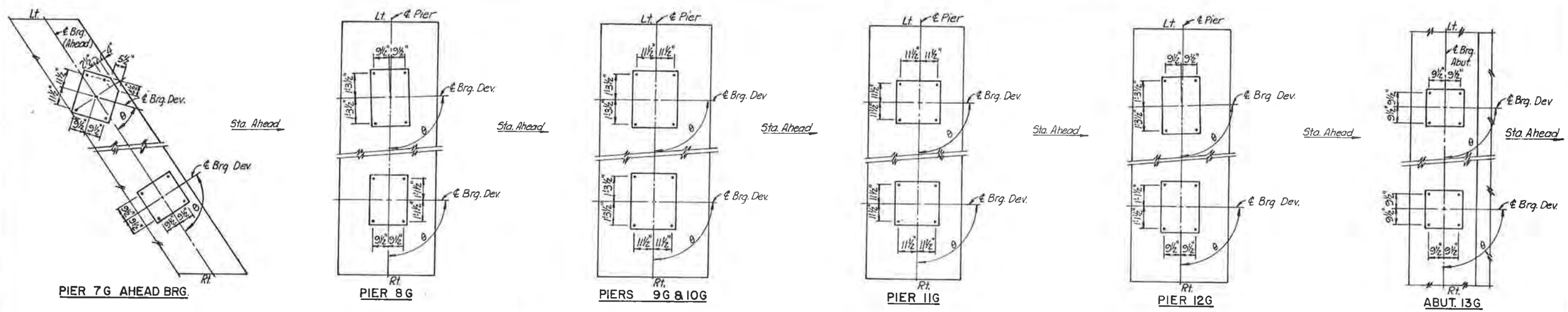

PIER 7G AHEAD BRG. — PIER 8G — PIERS 9G & 10G — PIER 11G — PIER 12G — ABUT. 13G

UNIT 2 BEARING DEVICE PLANS

UNIT ②

Location	Qty.	Type	Angle θ (Degrees)	Vertical Load (K) Perm. D.L.	Vertical Load (K) Max. Load	Horizontal Load (K) Longit.	Horizontal Load (K) Transv.	Longitud. Movement (Inches)	Initial Longitud. Offset (Inches)	Conc. Girder No. Studs	Steel Girder No. Plug Welds	Rotation (Radians)	X-Slope % ± Looking Sta. Ah'd.	Grade % ± Sta. Ah'd.	Masonry Base Plate C	Masonry Base Plate D	Anchor Bolts Size	Anchor Bolts No.	Anchor Bolts Type	Top Plate or Sole Plate A	Top Plate or Sole Plate B	Base Pot I.D.	Height H
				Values for one bearing device																			
Pier 7G(Ah) Lt.	1	G	39°49'01"	100	240	0	40	4 3/16"			12	0.0036	6.999	+0.515	28"	24"	1 1/2"ø	4	A588	18"	18"	9 5/16"	9 1/4"
Pier 7G(Ah) Rt.	1	E	90°00'00"	60	210	0	0	4 3/16"			12	0.0038	5.138	-4.782	24"	24"	1 1/2"ø	4		18"	18"	9 5/16"	9 1/4"
Pier 8G Lt	1	G	91°24'14"	310	670	0	40	3 7/16"			12	0.0045	6.600	-2.107	36"	24"	1 1/2"ø	4		22 3/4"	19 1/2"	16"	11"
Pier 8G Rt.	1	E	90°00'00"	290	640	0	0	3 3/16"			12	0.0044	6.600	-1.897	32"	24"	1 1/2"ø	4		19 1/2"	19 1/2"	16"	11"
Pier 9G	2	F	90°00'00"	460	920	72	67	0			12	0.0090	6.600	-1.942	36"	28"	2"ø	4		22 1/8"	22 5/8"	19"	9 3/4"
Pier 10G	2	F	90°00'00"	450	900	12	85	0			12	0.0090	6.600	-1.942	36"	28"	2"ø	4		21"	21 5/8"	18"	9 3/4"
Pier 11G	2	F	90°00'00"	320	700	13	50	0			12	0.0042	6.600	-1.942	28"	28"	2"ø	4		18 5/8"	19 1/2"	16"	9 3/4"
Pier 12G Lt.	1	G	91°52'08"	290	420	0	60	2 5/8"			12	0.0038	3.816	-2.066	36"	24"	1 1/2"ø	4		18"	18"	12 3/4"	11"
Pier 12G Rt.	1	E	90°00'00"	290	630	0	0	2 5/8"			12	0.0038	3.881	-1.960	32"	24"	1 1/2"ø	4		19 1/2"	19 1/2"	16"	11"
Abut. 13G Lt.	1	G	91°52'18"	110	180	0	14	3 5/8"			12	0.0038	3.422	-1.807	24"	24"	1 1/2"ø	4		18"	18	8 1/2"	9 1/4"
Abut. 13G Rt.	1	E	90°00'00"	70	240	0	0	3 5/8"			12	0.0038	3.479	-1.720	24"	24"	1 1/2"ø	4	A588	18"	18"	9 5/8"	9 1/4"

See Notes And Details Dwg. No. B-27.

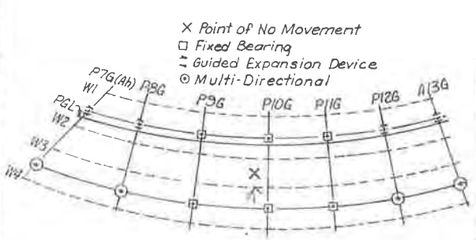

ORIENTATION PLAN UNIT ②

De Leuw, Cather & Company — Denver, CO

DIVISION OF HIGHWAYS

BEARING DEVICE

(TYPE III)

Designer	B. Arrighi	Structure Numbers	F-16-OL
Detailer	R. Hinshaw		
Drawing Number B-28		of 57	Drawings

Revision Dates (Preliminary Stage Only)

INITIAL	DATE	
BAA	1-83	DESIGNED BY
JLS	1-83	CHECKED BY
RWH	1-83	DETAILED BY
		CHECKED BY

STATE OF COLORADO
STATE DEPARTMENT OF HIGHWAYS
DIVISION OF HIGHWAYS
D. H. R. FORM 16.126
REV. FEB. 1984

AS CONSTRUCTED		
NO REVISIONS	REVISED	VOID

FED.ROAD REGION	DIVISION	PROJ. NO.	SHEET NO.	SHEET TOTALS
VIII	COLO.	IR 25-2(208)	119	

REVISIONS		

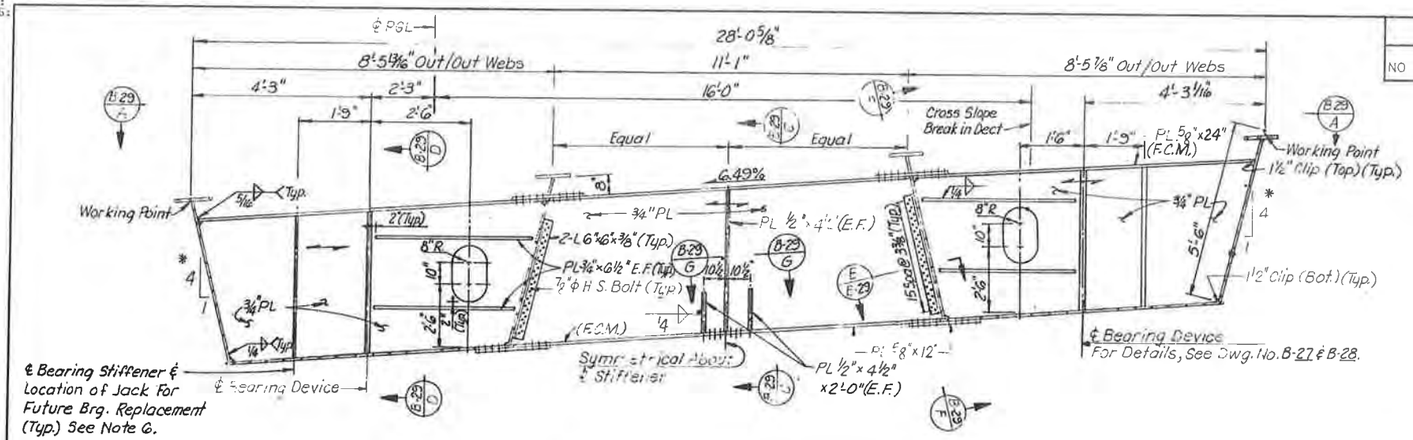

END DIAPHRAGM PIER 3H(S)

* Relative To Box Geometry

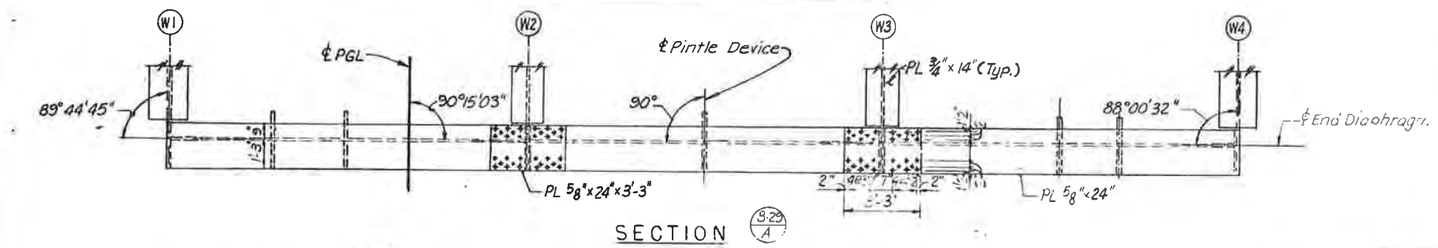

SECTION (B-29/A)

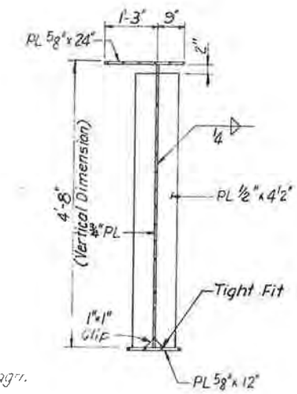

SECTION (B-29/C)

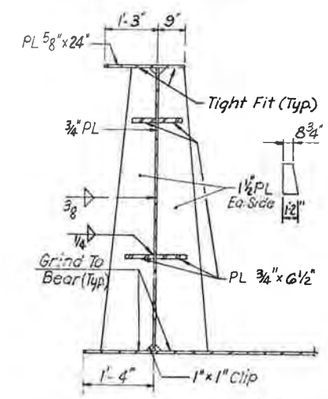

SECTION (B-29/D)

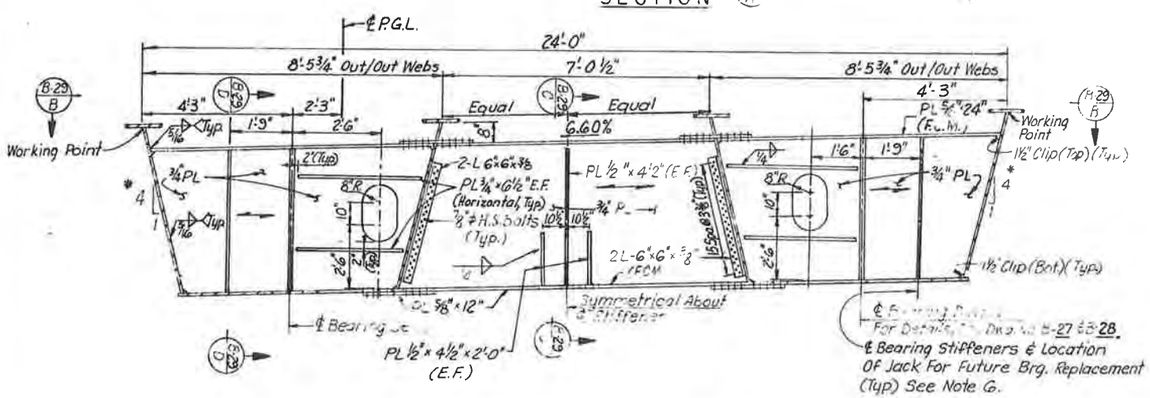

END DIAPHRAGM ABUTMENT 13G

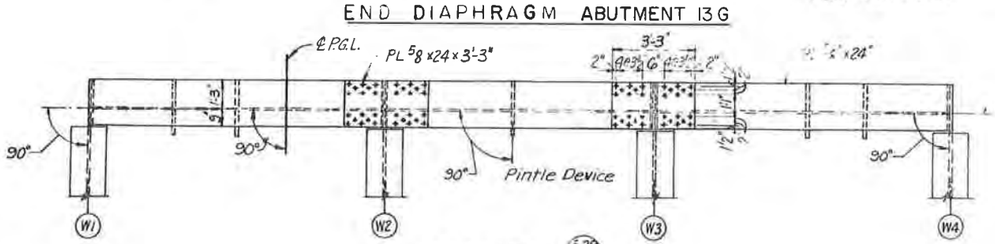

SECTION (B-29/B)

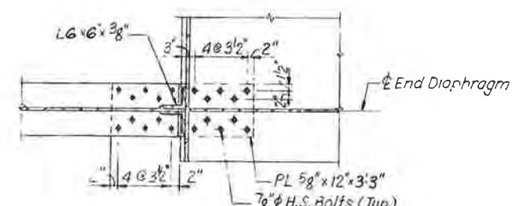

SECTION (B-29/E)

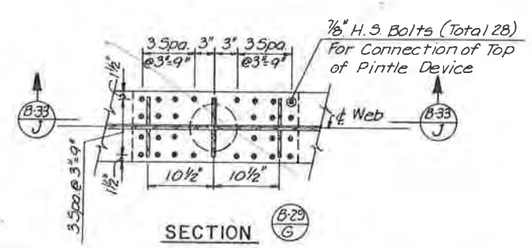

SECTION (B-29/G)

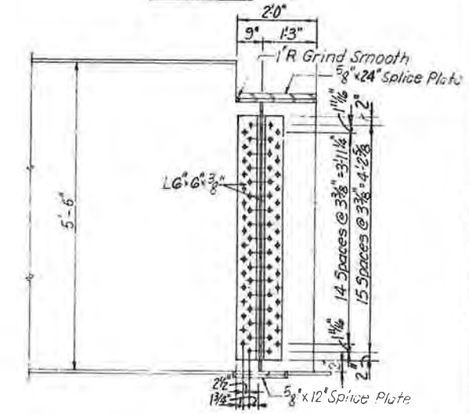

SECTION (B-29/F)

NOTES:

1. For Box Girder Geometry, See Dwg. No. B-7 and B-8.
2. For Bearing Device Details, See Dwg. No. B-27 and B-28.
3. For Cross Slope of End Diaphragms, See Dwg. No B-27 and B-28.
4. For Expansion Joint Details, See Dwg. No. B-41 and B-43.
5. For Pintle Detail, See Dwg. No. B-33.
6. Raising of Superstructure For Bearing Replacement to Be Done Without Live Load On Deck.
7. (F.C.M.) = Fracture Critical Member
8. ⟶ = Primary Direction of Rolling For Steel Plates As Fabricated In Mill.

	INITIAL	DATE
DESIGNED BY	J.L.S.	10-87
CHECKED BY	J.A.B.	2-88
DETAILED BY	R.M.H.	10-87
CHECKED BY		

De Leuw, Cather & Company — Denver, CO.

DIVISION OF HIGHWAYS

END DIAPHRAGM DETAILS PIER 3H(S) AND ABUTMENT 13G

Designer	J. Stapleton	Structure Numbers	F-16-OL
Detailer	R. Hinshaw		
Drawing Number	B-29	of 57	Drawings

Revision Dates (Preliminary Stage Only)

STATE OF COLORADO
STATE DEPARTMENT OF HIGHWAYS
DIVISION OF HIGHWAYS:
D. O. H. FORM NO. 126:
REV. FEB. 1984

AS CONSTRUCTED		
NO REVISIONS	REVISED	VOID

FED. ROAD REGION	DIVISION	PROJ. NO.	SHEET NO.	SHEET TOTALS
VIII	COLO.	IR 25-2(208)	120	

REVISIONS		

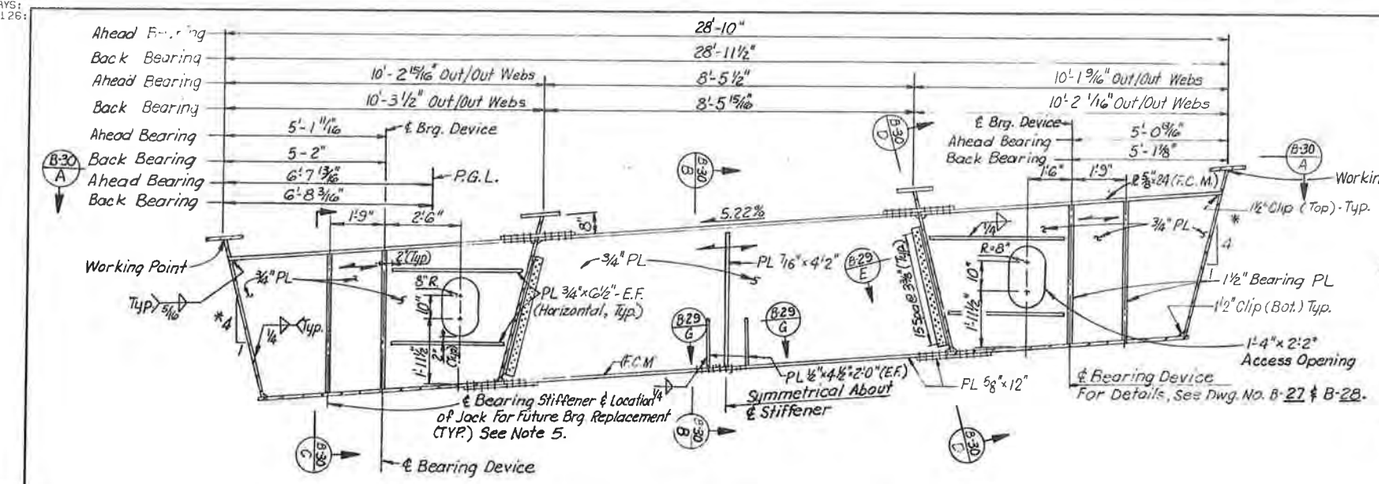

END DIAPHRAGM PIER 7G
(Looking Ahead on Stationing)

* Relative To Box Geometry

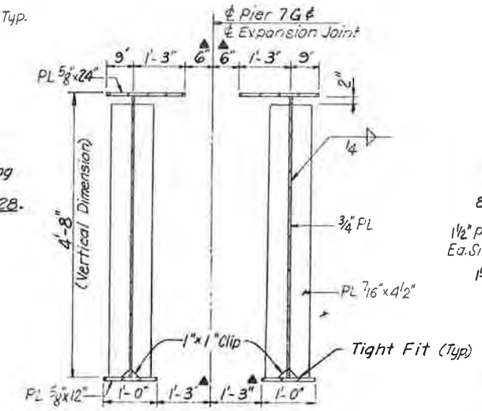

SECTION B-30 B

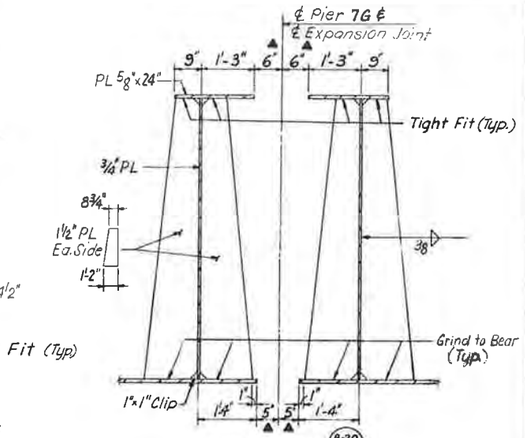

SECTION B-30 C

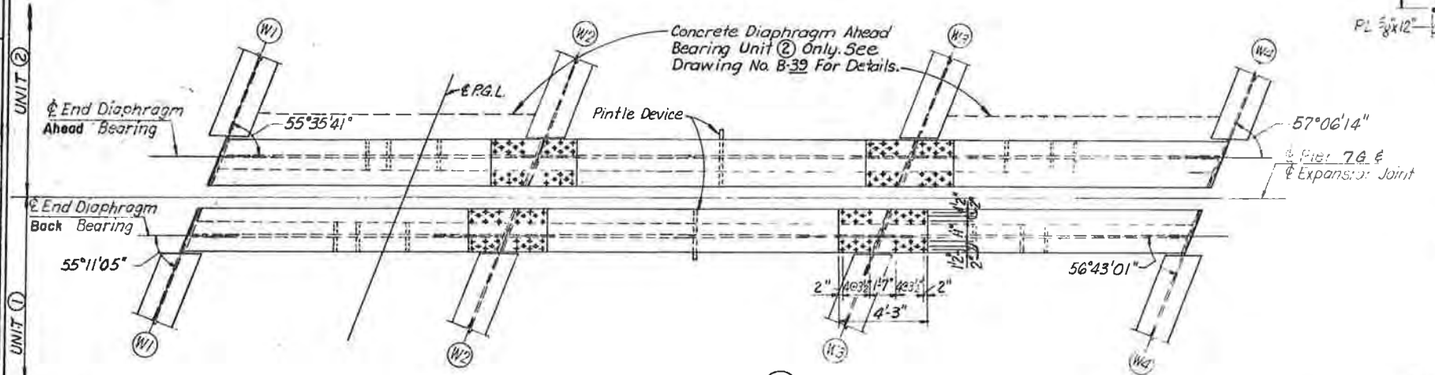

SECTION B-30 A

Notes:
1. For Box Girder Geometry, See Dwg. No. B-7 & B-8.
2. For Bearing Device Details, See Dwg. No B-27 & B-28.
3. For Cross Slope of End Diaphragms At ℄ Bearing, See Dwg. No. B-27 & B-28.
4. For Expansion Joint Details, See Dwg. No. B-42.
5. Raising of Superstructure For Bearing Replacement to be done Without Live Load on Deck.
6. (F.C.M.) = Fracture Critical Member
7. —— = Primary Direction of Rolling For Steel Plates As Fabricated in Mill.

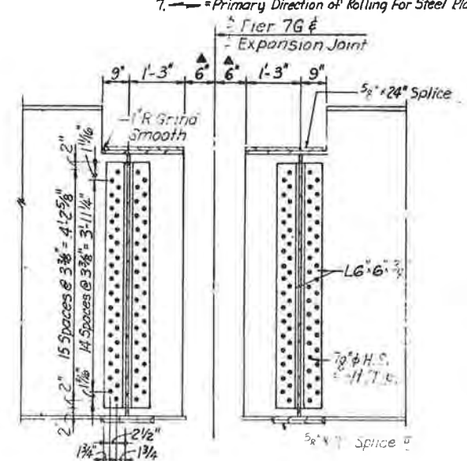

SECTION E-30 C

INITIAL	DATE	CHECKED BY
J.L.S.	10-83	
J.A.B.	2-83	
R.M.H.	10-87	

DESIGNED BY
CHECKED BY
DETAILED BY

De Leuw, Cather & Company — Denver, CO

DIVISION OF HIGHWAYS

END DIAPHRAGM DETAILS
PIER 7G

Designer J. Stapleton		Structure Numbers	F-16-OL
Detailer R. Hinshaw			
Drawing Number B-30	of 57		Drawings

Revision Dates (Preliminary Stage Only)

STATE OF COLORADO
STATE DEPARTMENT OF HIGHWAYS
DIVISION OF HIGHWAYS:
D. O. H. FORM NO. 1261
REV. FEB. 1984

AS CONSTRUCTED		
NO REVISIONS	REVISED	VOID

FED. ROAD REGION	DIVISION	PROJ. NO.	SHEET NO.	SHEET TOTALS
VIII	COLO.	IR 25-2 (208)	121	

REVISIONS		

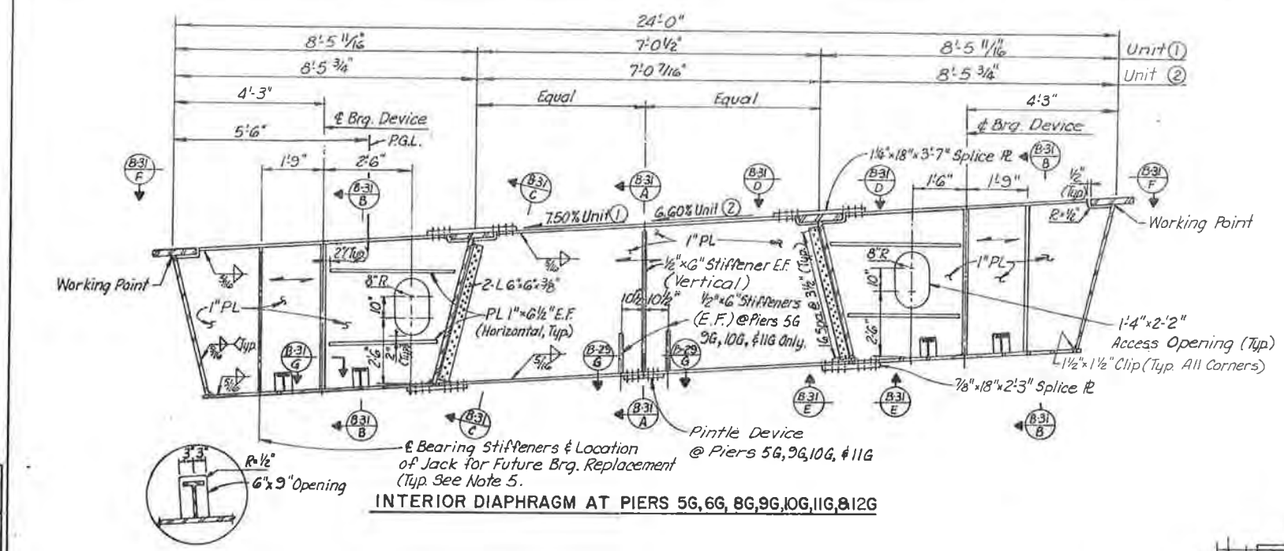

INTERIOR DIAPHRAGM AT PIERS 5G, 6G, 8G, 9G, 10G, 11G, & 12G

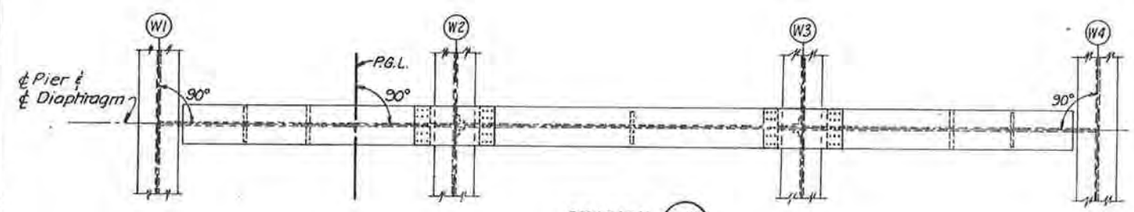

SECTION B-31 F

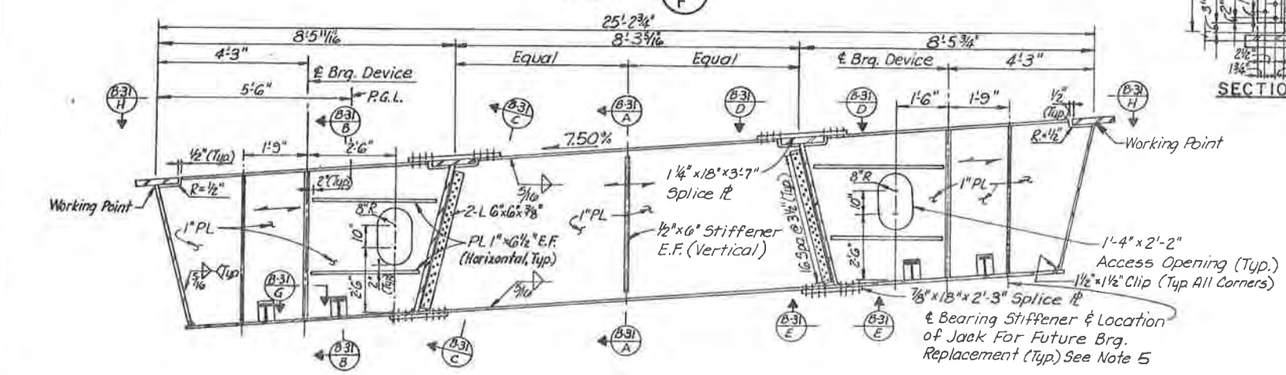

INTERIOR DIAPHRAGM AT PIER 4G

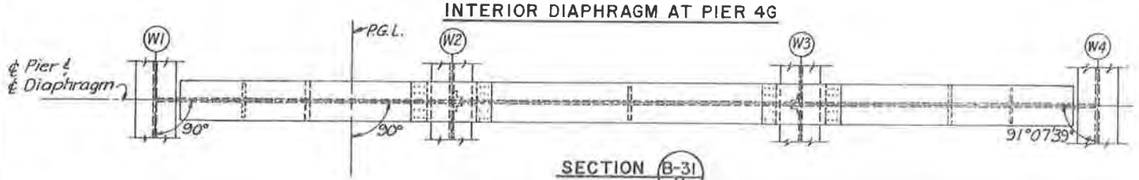

SECTION B-31 H

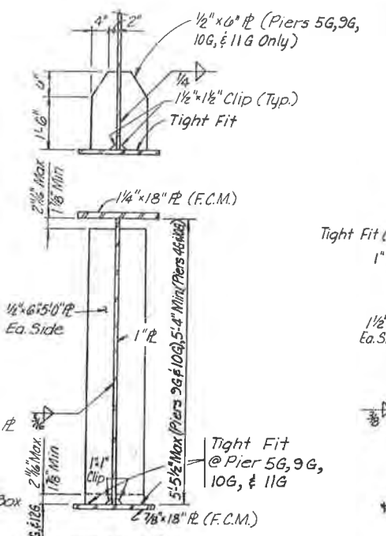

SECTION B-31 A

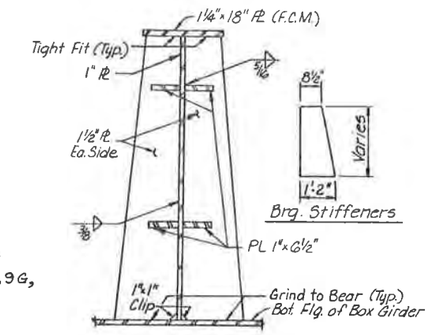

Brg. Stiffeners

SECTION B-31 B

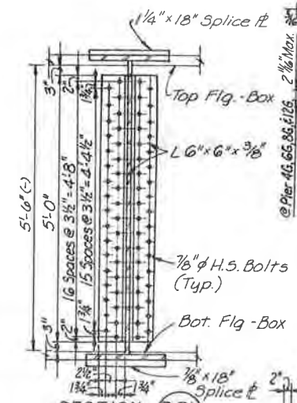

SECTION B-31 C

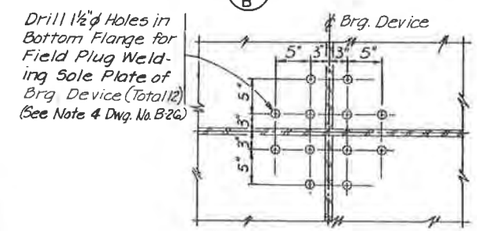

SECTION B-31 G

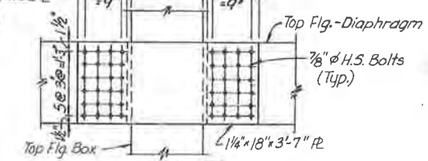

SECTION B-31 D

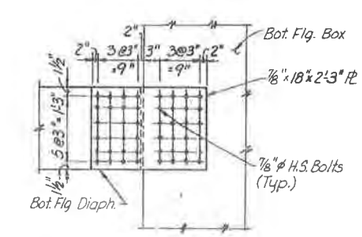

SECTION B-31 E

NOTES:

1. ⟶ = Primary Direction of Rolling For Steel Plates As Fabricated In Mill.
2. For Box Girder Geometry, See Dwg. No. B-7 & B-8
3. For Bearing Device Details, See Dwg. No. B-27 & B-28
4. For Pintle Details, See Dwg. No. B-33.
5. Raising of Superstructure For Bearing Replacement to be Done Without Live Load On Deck.
6. (F.C.M.) = Fracture Critical Member

De Leuw, Cather & Company Denver, CO.

DIVISION OF HIGHWAYS

INTERIOR DIAPHRAGM DETAILS

PIERS 4G THRU 6G & 8G THRU 12G

Designer J. Stapleton		Structure Numbers	F-16-OL
Detailer R. Hinshaw			
Drawing Number B-31	of 57		Drawings

DESIGNED BY	INITIAL	DATE
CHECKED BY	J.L.S.	11/87
CHECKED BY	J.A.B.	2-88
DETAILED BY	R.M.H.	11-87

Revision Dates	(Preliminary Stage Only)

STATE OF COLORADO
STATE DEPARTMENT OF HIGHWAYS
DIVISION OF HIGHWAYS
D. O. H. FORM NO. 1261
REV. FEB. 1984

AS CONSTRUCTED		
NO REVISIONS	REVISED	VOID

FED. ROAD REGION	DIVISION	PROJ. NO.	SHEET NO.	SHEET TOTALS
VIII	COLO.	IR 25-2(208)	122	

REVISIONS		

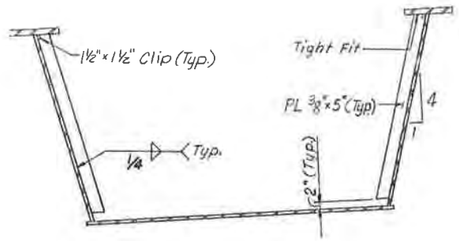

TYPE 1

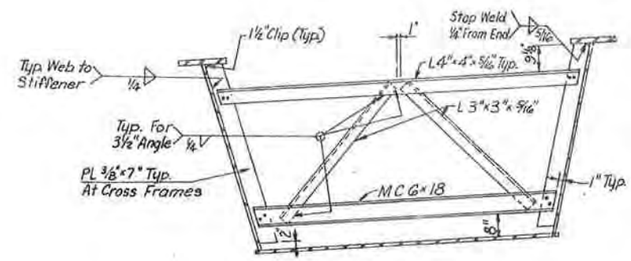

TYPE A (PERMANENT)

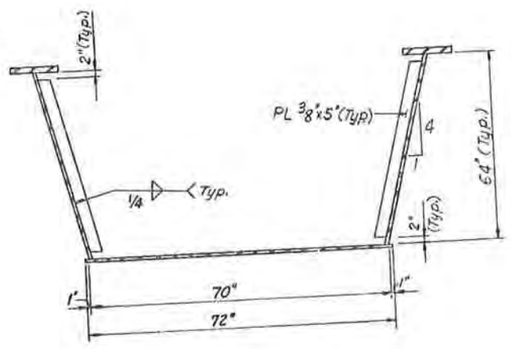

TYPE 2

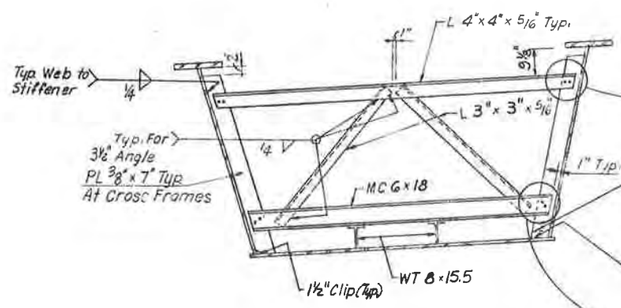

TYPE B (PERMANENT)

CROSS FRAMES

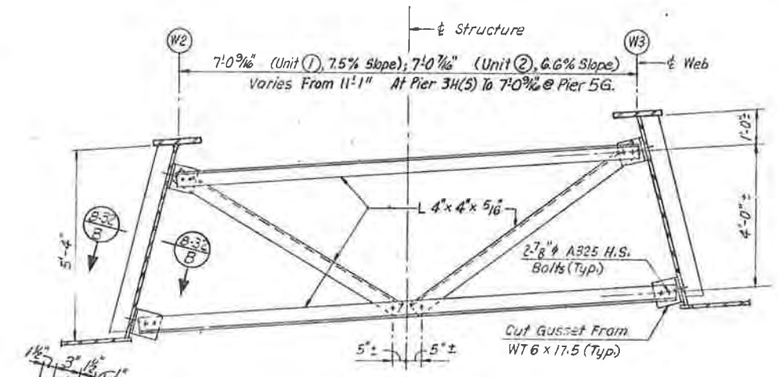

TEMPORARY ERECTION CROSS FRAME

To Be Removed After Slab Has Reached Its 28-Day Design Strength. After Removal of Angles And Structural Tees, 7/8" ϕ A325 H.S. Bolts Shall Be Replaced In Box Girder Web Holes And Tightened to Required Fastener Tension According to Standard Specification.

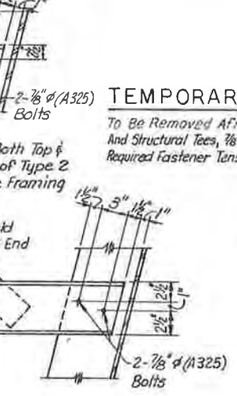

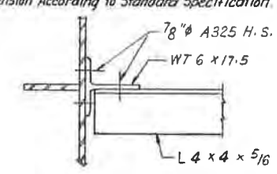

SECTION B-32/B

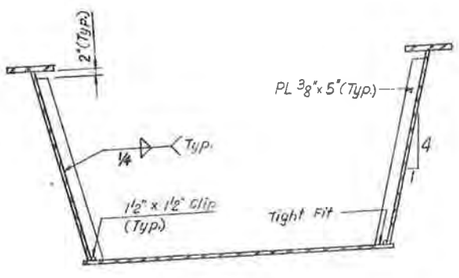

TYPE 3

INTERMEDIATE STIFFENERS

Steel For Stiffeners To Be AASHTO M-222 (ASTM A-588, Corrosion Resistant)

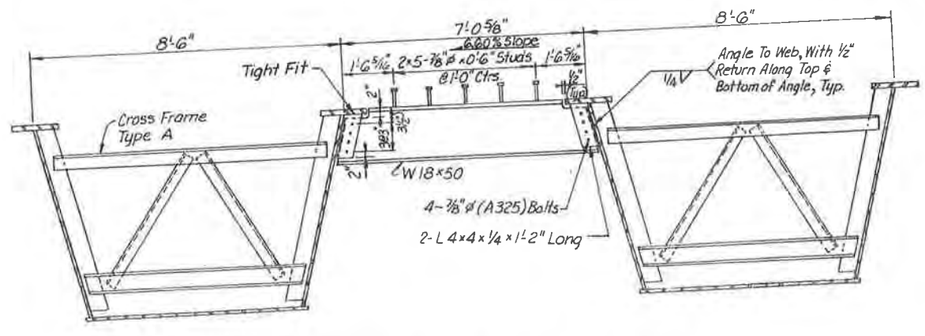

DIAPHRAGM TYPE "C" (PERMANENT)

Steel For Diaphragm To Be AASHTO M-222 (ASTM A-588, Corrosion Resistant)

NOTES:

1. Steel For Permanent And Temporary Bracing Shall Be AASHTO M-183 (ASTM A-36), Except 3/8"×7" Stiffeners Which Shall Be AASHTO M-222 (ASTM A-588).
2. For Location of Cross Frames And Diaphragms, See Framing Plans, Drawings No. B-20 Thru B-25.
3. For Spacing of WT 8×15.5 Longitudinal Stiffeners, See Section B-32/A.

	INITIAL	DATE
DESIGNED BY	J.L.S.	10-87
CHECKED BY	J.A.B.	2-88
DETAILED BY	R.M.H.	10-87
CHECKED BY		

De Leuw, Cather & Company — Denver, CO.

DIVISION OF HIGHWAYS

DIAPHRAGM AND STRUCTURAL STEEL MISCELLANEOUS DETAILS

Designer	J. Stapleton	Structure Numbers	F-16-OL
Detailer	R. Hinshaw		
Drawing Number	B-32	of 57	Drawings

Revision Dates (Preliminary Stage Only)

STATE OF COLORADO
STATE DEPARTMENT OF HIGHWAYS
DIVISION OF HIGHWAYS
D. O. H. FORM NO. 1261
REV. FEB. 1984

AS CONSTRUCTED		
NO REVISIONS ☐	REVISED ☐	VOID ☐

FED. ROAD REGION	DIVISION	PROJ. NO.	SHEET NO.	SHEET TOTALS
VIII	COLO.	IR 25-2(208)	123	

REVISIONS		

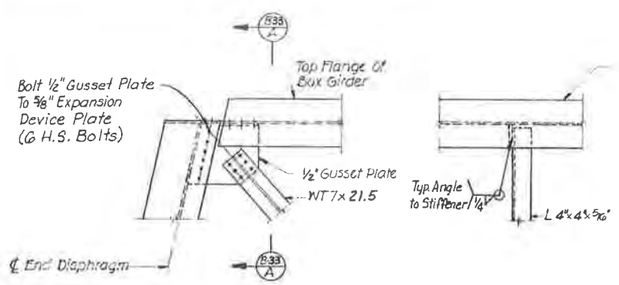

DETAIL B-20/1 B-25

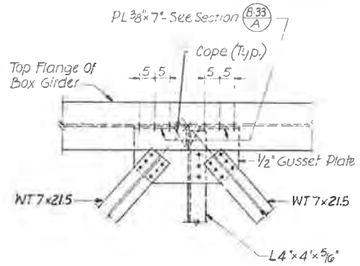

DETAIL B-20/2 B-21/2 B-22/2 B-23/2 B-24/2 B-25/2 DETAIL B-20/3 B-21/3 B-22/3 B-23/3 B-24/3 B-25/3

Steel For Top Lateral Bracing To Be AASHTO M-183 (ASTM A-36)

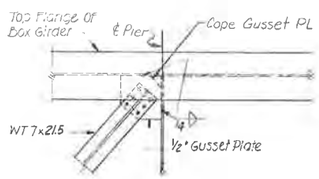

DETAIL B-20/4 B-21/4 B-22/4 B-23/4 B-24/4 B-25/4

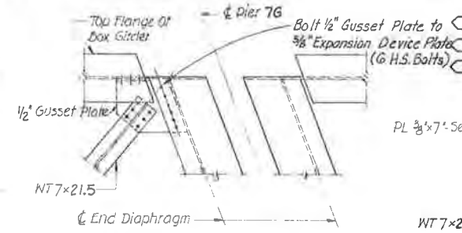

DETAIL B-21/5 B-22/5

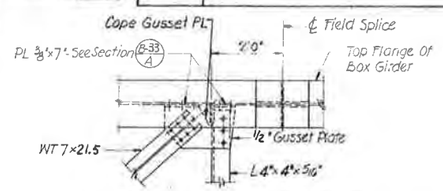

DETAIL B-20/6 B-21/6 B-22/6 B-23/6 B-24/6 B-25/6

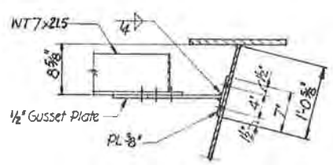

SECTION B-33 A

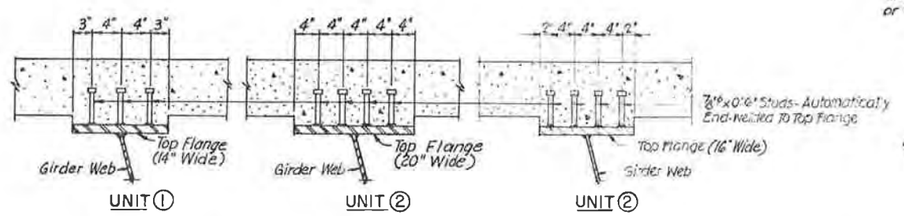

SHEAR CONNECTOR DETAILS

Steel For Sheer Connectors Shall Be AASHTO M-169

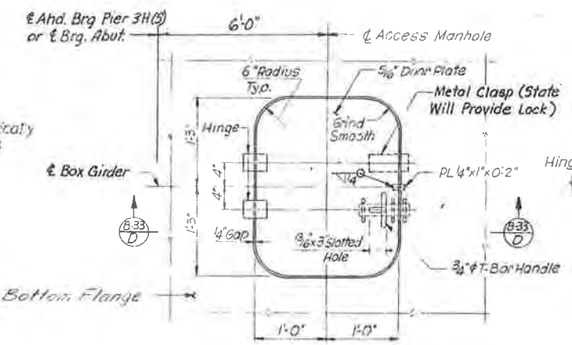

PLAN OF ACCESS MANHOLE

4 REQUIRED

For Location Of Access Manholes, See Framing Plans, Dwg. No. B-20 and B-25

Steel for Access Manhole to Be ASTM A-36

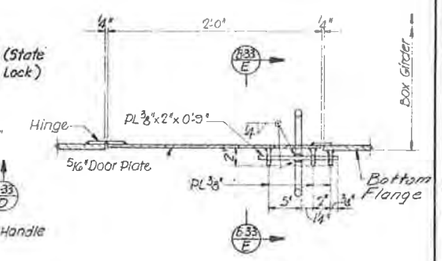

SECTION B-33 O

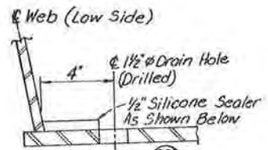

SECTION B-33 C

Note:
Clean Steel Before Applying Silicone Sealer Compound Subject to Approval of Engineer.

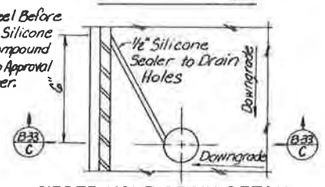

GIRDER HOLE DRAIN DETAIL

STATION		LOCATION	
803+20.0	806+94.5	810+42.0	814+20.0
803+69.0	807+34.0	810+85.0	814+64.0
804+18.0	807+66.5 (E)	811+28.0	815+08.5
804+57.5	807+77.0 (W)	811+71.0	
804+97.0	807+16.5	812+17.0	
805+36.5	808+60.5	812+63.0	
805+76.0	809+06.0	813+09.0	
805+15.5	809+52.0	813+46.0	
806+55.0	809+98.0	813+83.0	

(E)-East Only
(W)-West Only

BOX GIRDER DRAINAGE

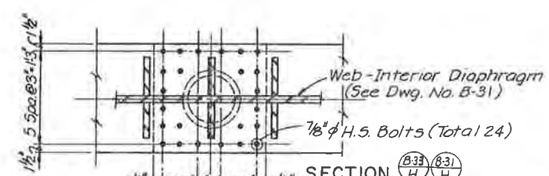

SECTION B-33 H B-31 H

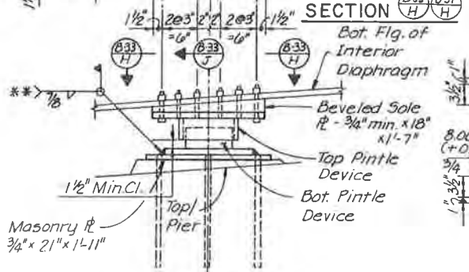

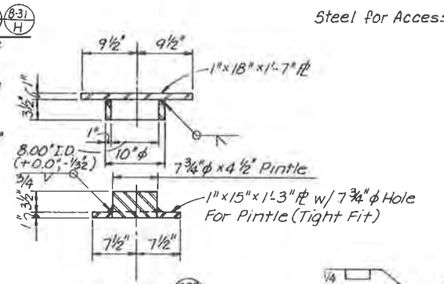

SECTION B-33 J

Steel for Pintle Device to be ASTM A-588

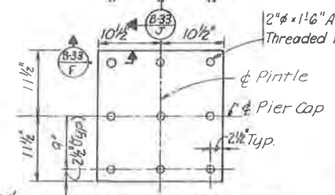

PLAN - MASONRY PLATE

** Field Weld Bottom Pintle Device to Masonry Plate after Both Bearings in Pier have been Plug Welded (See Note 4 Dwg. No. B-26)

PINTLE DEVICE DETAILS

(4 Required)

(For Piers 5G, 9G, 10G, And 11G)

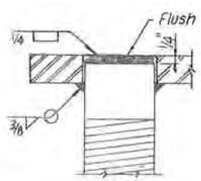

SECTION B-33 F B-34 F

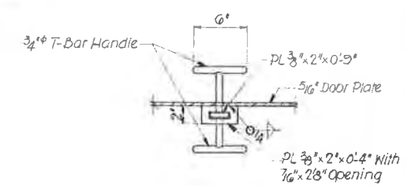

SECTION B-33 E

De Leuw, Cather & Company Denver, CO.

DIVISION OF HIGHWAYS

STRUCTURAL STEEL MISCELLANEOUS DETAILS

Designer J. Stapleton		Structure Numbers	F-16-OL
Detailer R. Hinshaw			
Drawing Number B-33	of 57	Drawings	

Revision Dates (Preliminary Stage Only)

INITIAL	DATE
DESIGNED BY JLS	10-87
CHECKED BY JAB	2-88
DETAILED BY RMH	10-87
CHECKED BY	

STATE OF COLORADO
STATE DEPARTMENT OF HIGHWAYS
DIVISION OF HIGHWAYS:
D. O. H. FORM NO. 126:
REV. FEB. 1984

AS CONSTRUCTED		
NO REVISIONS	REVISED	VOID

FED. ROAD REGION	DIVISION	PROJ. NO.	SHEET NO.	SHEET TOTALS
VIII	COLO.	IR 25-2(208)	124	

REVISIONS		

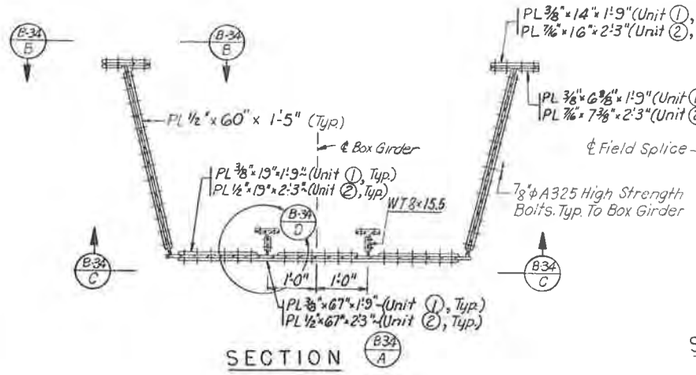

SECTION (B-34 A)

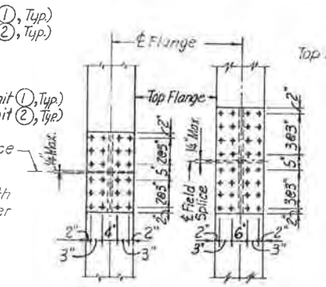

SECTION (B-34 B)

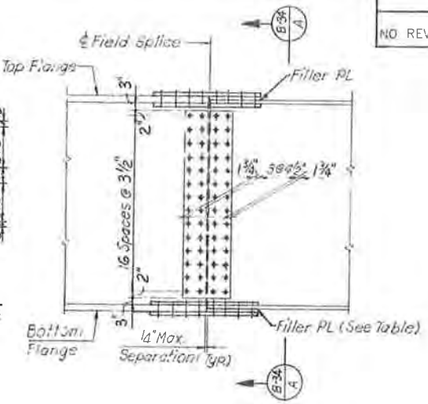

FIELD SPLICE DETAIL

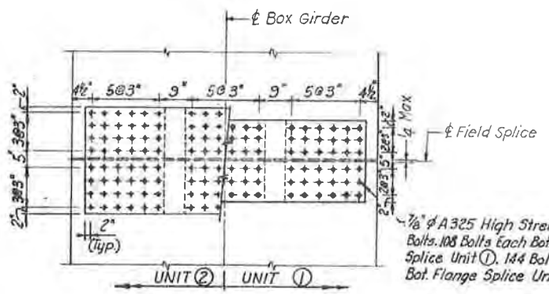

SECTION (B-34 C)

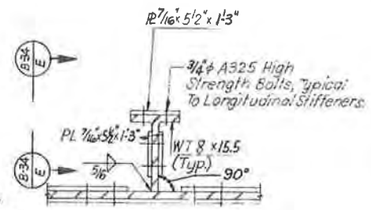

DETAIL (B-34 D)

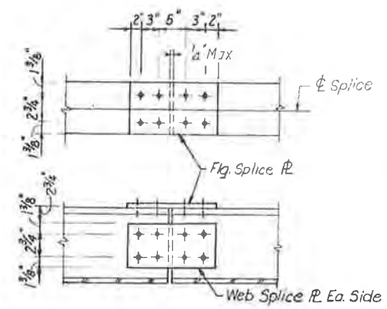

SECTION (B-34 E)

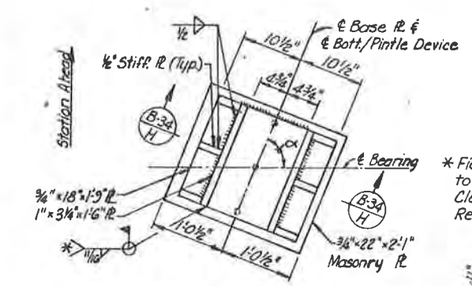

SECTION (B-34 G)

TABLE OF ANGLE α

LOCATION	α
Pier 3H(S)	77°23'13"
Pier 7G(Back)	40°49'34"
Pier 7G(Ahead)	39°49'01"
Abut. 13G	91°52'18"

* Field Weld Bottom Pintle Device to Masonry Plate to Provide 3/4" Clearance Between Pintle And Restrainer Plates.

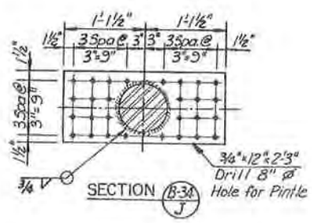

SECTION (B-34 J)

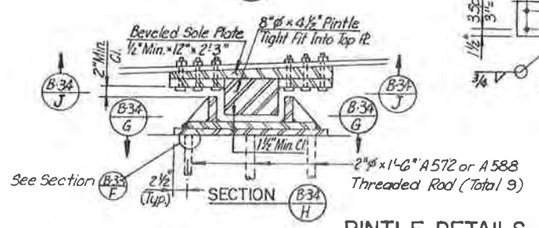

SECTION (B-34 H)

PINTLE DETAILS
(AT PIERS 3H(S), 7G, & ABUT. 13G)(4 REQ'D)

FILLER PLATE TABLE

	FIELD SPLICE	TOP OF TOP FLANGE	INSIDE FACE OF WEB	BOTTOM OF BOTTOM FLANGE
UNIT 1	1	~	4-1/16" x 60" x 0'-8"	2-1/8" x 67" x 0'-10"
	2	~	4-1/16" x 60" x 0'-8"	2-1/8" x 67" x 0'-10"
	3	~	4-1/16" x 60" x 0'-8"	2-1/8" x 67" x 0'-10"
	4	~	4-1/16" x 60" x 0'-8"	2-1/8" x 67" x 0'-10"
	5	4-3/8" x 14" x 0'-10"	4-1/16" x 60" x 0'-8"	2-5/16" x 67" x 0'-10"
	6	4-1/8" x 14" x 0'-10"	~	2-1/16" x 67" x 0'-10"
UNIT 2	7	~	4-1/16" x 60" x 0'-8"	2-1/4" x 67" x 1'-1"
	8	~	4-1/16" x 60" x 0'-8"	~
	9	4-7/8" x 16" x 1'-1"	4-1/16" x 60" x 0'-8"	2-1/4" x 67" x 1'-1"
	10	4-7/8" x 16" x 1'-1"	4-1/16" x 60" x 0'-8"	~
	11	4-7/8" x 16" x 1'-11"	4-1/16" x 60" x 0'-8"	~
	12	4-7/8" x 16" x 1'-11"	4-1/16" x 60" x 0'-8"	~
	13	~	4-1/16" x 60" x 0'-8"	~
	14	~	4-1/16" x 60" x 0'-8"	2-1/8" x 67" x 1'-1"
	15	4-1/8" x 16" x 1'-11"	4-1/16" x 60" x 0'-8"	2-1/4" x 67" x 1'-1"
	16	4-1/8" x 16" x 1'-11"	4-1/16" x 60" x 0'-8"	2-1/4" x 67" x 1'-1"

SPLICE PLATE TABLE

	PLATE NO.	LOCATION	NO. REQ'D PER F.S.	TOTAL NO. REQ'D	DIMENSIONS
UNIT 1	1	T/Top Flanges	4	24	7/8" x 14" x 1'-9"
	2	B/ Top Flanges	8	48	7/8" x 63 3/8" x 1'-9"
	3	Sides of Webs	8	48	1/2" x 60" 1'-5"
	4	T/Bottom Flanges	6	36	3/8" x 19" x 1'-9"
	5	B/Bottom Flanges	2	12	3/8" x 67" x 1'-9"
	6	Sides of Long. Stiffener	8	48	7/16" x 5 1/2" x 1'-3"
	7	T/Long. Stiffener	4	24	7/16" x 5 1/2" x 1'-3"
UNIT 2	8	T/Top Flanges	4	40	7/16" x 16" x 2'-3"
	9	B/ Top Flanges	8	80	7/16" x 73 3/8" x 2'-3"
	10	Sides Of Webs	8	80	1/2" x 60" x 1'-5"
	11	T/Bottom Flanges	6	60	1/2" x 19" x 2'-3"
	12	B/Bottom Flanges	2	20	1/2" x 67" x 2'-3"
	13	Sides Of Long. Stiffener	8	80	7/16" x 5 1/2" x 1'-3"
	14	T/Long. Stiffener	4	40	7/16" x 5 1/2" x 1'-3"

NOTES:

1. Box Girder Shown Is Typical For Both Boxes.
2. For Framing Plan And Girder Elevation, See Dwg. No. B-20 Thru B-25.
3. Splice Bolts Shall Be A325 High Strength, 7/8" ϕ On Box Girder Splices.

DESIGNED BY	J.L.S.	2-83	CHECKED BY	B.A.A.	2-83
CHECKED BY	B.A.A.	2-83	DETAILED BY	P.M.H.	2-83

De Leuw, Cather & Company — Denver, CO.

DIVISION OF HIGHWAYS

BOX GIRDER - FIELD SPLICES

Designer J. Stapleton		Structure Numbers	F-16-OL
Detailer R. Hinshaw			
Drawing Number B-34	of 57		Drawings

Revision Dates (Preliminary Stage Only)

STATE OF COLORADO
STATE DEPARTMENT OF HIGHWAYS
DIVISION OF HIGHWAYS
D. O. H. FORM NO. 1261
REV. FEB. 1984

AS CONSTRUCTED		
NO REVISIONS ☐	REVISED ☐	VOID ☐

FED. ROAD REGION	DIVISION	PROJ. NO.	SHEET NO.	SHEET TOTALS
VIII	COLO.	IR25-2(208)	125	

REVISIONS		

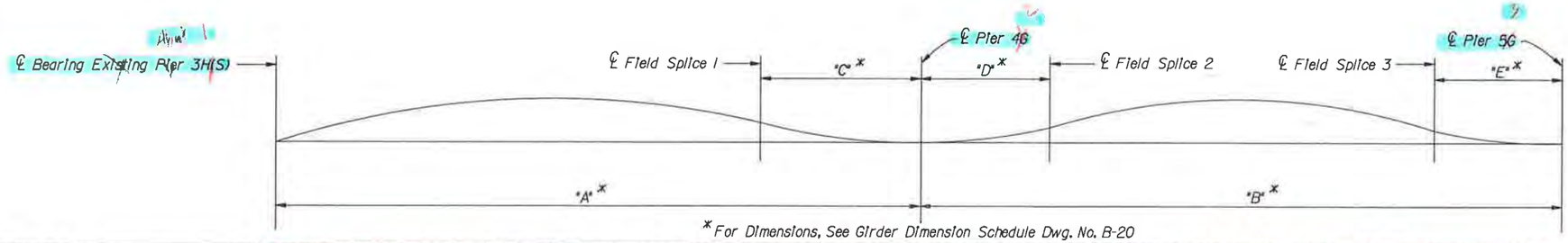

*For Dimensions, See Girder Dimension Schedule Dwg. No. B-20

TWENTIETH POINT	1.00	1.05	1.10	1.15	1.20	1.25	1.30	1.35	1.40	1.45	1.50	1.55	1.60	1.65	1.70	1.75	1.80	1.85	1.90	1.95	2.00	2.05	2.10	2.15	2.20	2.25	2.30	2.35	2.40	2.45	2.50	2.55	2.60	2.65	2.70	2.75	2.80	2.85	2.90	2.95	3.00
GIRDER D.L. DEFLECTION (FT)	0	0.003	0.006	0.008	0.011	0.014	0.014	0.014	0.015	0.015	0.015	0.013	0.012	0.010	0.009	0.007	0.006	0.004	0.003	0.001	0	0.002	0.004	0.005	0.007	0.009	0.011	0.013	0.014	0.016	0.018	0.017	0.015	0.014	0.013	0.011	0.009	0.007	0.004	0.002	0
TOTAL D.L.LESS GIRDER D.L.DEFLECTION(FT)	0	0.013	0.026	0.038	0.051	0.064	0.066	0.068	0.070	0.072	0.074	0.066	0.058	0.050	0.042	0.034	0.028	0.020	0.014	0.007	0	0.009	0.019	0.028	0.038	0.047	0.055	0.062	0.070	0.077	0.085	0.079	0.072	0.066	0.059	0.053	0.042	0.032	0.021	0.011	0
TOTAL D.L. DEFLECTION (FT)	0	0.016	0.032	0.046	0.062	0.078	0.080	0.082	0.085	0.087	0.089	0.079	0.070	0.060	0.051	0.041	0.034	0.024	0.017	0.008	0	0.011	0.023	0.033	0.045	0.056	0.066	0.075	0.084	0.093	0.103	0.096	0.087	0.080	0.072	0.064	0.051	0.039	0.025	0.013	0
SHOULDER N. TRANSITION (FT)WEB 4	0.156	0.143	0.129	0.116	0.102	0.089	0.075	0.062	0.049	0.035	0.022	0.008	0																												

SPANS 1 & 2

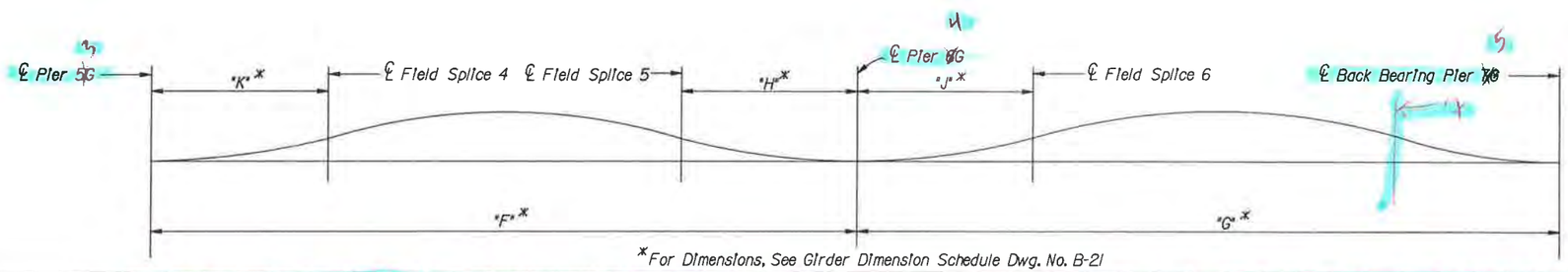

*For Dimensions, See Girder Dimension Schedule Dwg. No. B-21

TWENTIETH POINT	3.00	3.05	3.10	3.15	3.20	3.25	3.30	3.35	3.40	3.45	3.50	3.55	3.60	3.65	3.70	3.75	3.80	3.85	3.90	3.95	4.00	4.05	4.10	4.15	4.20	4.25	4.30	4.35	4.40	4.45	4.50	4.55	4.60	4.65	4.70	4.75	4.80	4.85	4.90	4.95	5.00
GIRDER D.L. DEFLECTION (FT)	0	0.001	0.002	0.003	0.004	0.005	0.005	0.006	0.006	0.007	0.007	0.006	0.005	0.003	0.002	0.001	0.001	0.001	0	0	0	0.006	0.012	0.018	0.024	0.030	0.035	0.041	0.046	0.052	0.057	0.055	0.053	0.051	0.049	0.047	0.038	0.028	0.019	0.009	0
TOTAL D.L.LESS GIRDER D.L.DEFLECTION(FT)	0	0.003	0.007	0.010	0.014	0.017	0.020	0.022	0.025	0.027	0.030	0.025	0.019	0.014	0.008	0.003	0.002	0.002	0.001	0.001	0	0.027	0.053	0.080	0.106	0.133	0.156	0.179	0.203	0.226	0.249	0.240	0.231	0.222	0.213	0.204	0.163	0.122	0.082	0.041	0
TOTAL D.L. DEFLECTION (FT)	0	0.004	0.009	0.013	0.018	0.022	0.025	0.028	0.031	0.034	0.037	0.031	0.024	0.017	0.010	0.004	0.003	0.003	0.001	0.001	0	0.033	0.065	0.098	0.130	0.163	0.191	0.220	0.249	0.278	0.306	0.295	0.284	0.273	0.262	0.251	0.201	0.140	0.101	0.050	0

SPANS 3 & 4

UDA2[200,32]SFCAM0114.90R

DeLeuw, Cather & Company Denver, CO.

DIVISION OF HIGHWAYS

STEEL BOX GIRDER
CAMBER DIAGRAM

(YAMP P) ~~UNIT 1~~

Designer B. Arright		Structure Numbers	F-16-OL
Detailer S. Shibao			

Drawing Number B-35 of 57 Drawings

DESIGNED BY	INITIAL	DATE
CHECKED BY	B.A.A.	1-87
CHECKED BY	J.L.S.	1-88
DETAILED BY	S.S.	11-87

Revision Dates (Preliminary Stage Only)

STATE OF COLORADO
STATE DEPARTMENT OF HIGHWAYS
DIVISION OF HIGHWAYS
D. O. H. FORM NO. 126
REV. FEB. 1984

AS CONSTRUCTED		
NO REVISIONS ☐	REVISED ☐	VOID ☐

FED. ROAD REGION	DIVISION	PROJ. NO.	SHEET NO.	SHEET TOTALS
VIII	COLO.	IR25-2(208)	126	

REVISIONS		

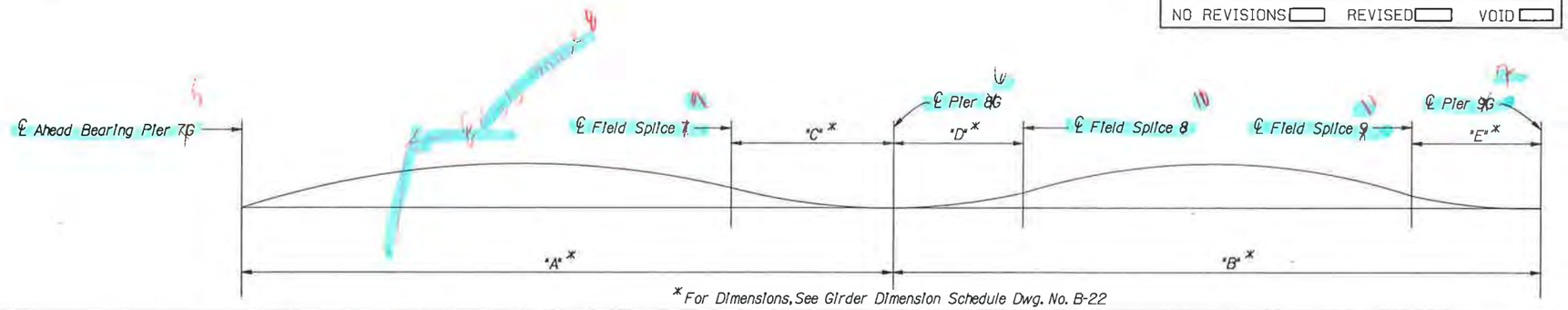

* For Dimensions, See Girder Dimension Schedule Dwg. No. B-22

TWENTIETH POINT	5.00	5.05	5.10	5.15	5.20	5.25	5.30	5.35	5.40	5.45	5.50	5.55	5.60	5.65	5.70	5.75	5.80	5.85	5.90	5.95	6.00	6.05	6.10	6.15	6.20	6.25	6.30	6.35	6.40	6.45	6.50	6.55	6.60	6.65	6.70	6.75	6.80	6.85	6.90	6.95	7.00
GIRDER D.L. DEFLECTION (FT.)	0	0.002	0.004	0.005	0.007	0.009	0.009	0.009	0.010	0.010	0.010	0.009	0.008	0.006	0.005	0.004	0.003	0.002	0.002	0.001	0	0.004	0.008	0.011	0.015	0.019	0.020	0.021	0.023	0.024	0.025	0.021	0.017	0.012	0.008	0.004	0.003	0.002	0.002	0.001	0
TOTAL D.L.LESS GIRDER D.L.DEFLECTION(FT.)	0	0.007	0.014	0.021	0.028	0.035	0.036	0.037	0.037	0.038	0.039	0.035	0.031	0.028	0.024	0.020	0.016	0.012	0.008	0.004	0	0.016	0.032	0.047	0.063	0.079	0.085	0.091	0.097	0.103	0.109	0.093	0.077	0.062	0.046	0.030	0.024	0.018	0.012	0.006	0
TOTAL D.L. DEFLECTION (FT.)	0	0.009	0.018	0.026	0.035	0.044	0.045	0.046	0.047	0.048	0.049	0.044	0.039	0.034	0.029	0.024	0.019	0.014	0.010	0.005	0	0.020	0.040	0.058	0.078	0.098	0.105	0.112	0.120	0.127	0.134	0.114	0.094	0.074	0.054	0.034	0.027	0.020	0.014	0.007	0

SPANS 5 & 6

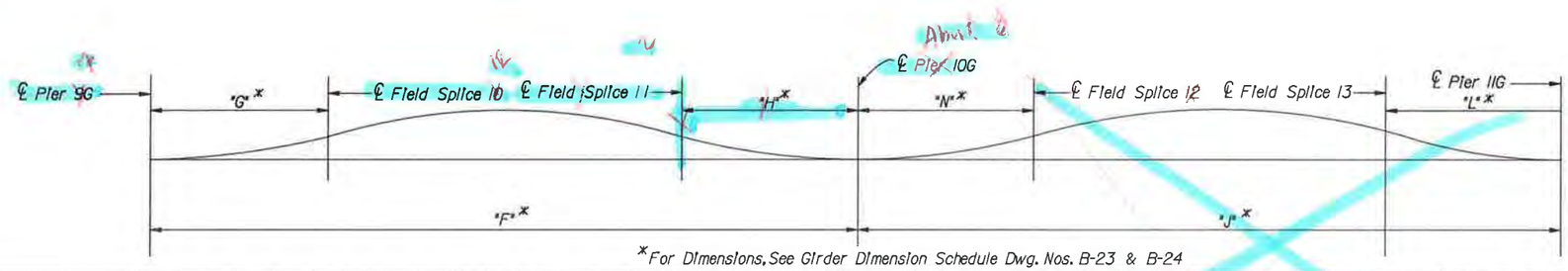

* For Dimensions, See Girder Dimension Schedule Dwg. Nos. B-23 & B-24

TWENTIETH POINT	7.00	7.05	7.10	7.15	7.20	7.25	7.30	7.35	7.40	7.45	7.50	7.55	7.60	7.65	7.70	7.75	7.80	7.85	7.90	7.95	8.00	8.05	8.10	8.15	8.20	8.25	8.30	8.35	8.40	8.45	8.50	8.55	8.60	8.65	8.70	8.75	8.80	8.85	8.90	8.95	9.00
GIRDER D.L. DEFLECTION (FT.)	0	0.015	0.030	0.044	0.059	0.074	0.084	0.094	0.105	0.115	0.125	0.115	0.105	0.094	0.084	0.074	0.059	0.044	0.030	0.015	0	0	0.001	0.001	0.002	0.002	0.006	0.010	0.013	0.017	0.021	0.020	0.019	0.017	0.016	0.015	0.012	0.009	0.006	0.003	0
TOTAL D.L.LESS GIRDER D.L.DEFLECTION(FT.)	0	0.051	0.102	0.154	0.205	0.256	0.292	0.328	0.364	0.400	0.436	0.401	0.365	0.330	0.294	0.259	0.207	0.155	0.104	0.052	0	0.005	0.009	0.014	0.018	0.023	0.037	0.051	0.066	0.080	0.094	0.088	0.082	0.077	0.071	0.065	0.052	0.039	0.026	0.013	0
TOTAL D.L. DEFLECTION (FT.)	0	0.066	0.132	0.198	0.264	0.330	0.376	0.422	0.469	0.515	0.561	0.516	0.470	0.424	0.378	0.333	0.266	0.199	0.134	0.067	0	0.005	0.010	0.015	0.020	0.025	0.043	0.061	0.079	0.097	0.115	0.108	0.101	0.094	0.087	0.080	0.064	0.048	0.032	0.016	0

SPANS 7 & 8

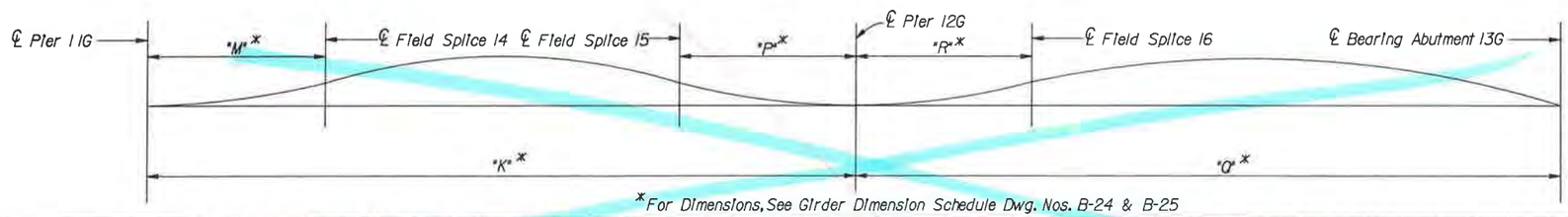

* For Dimensions, See Girder Dimension Schedule Dwg. Nos. B-24 & B-25

TWENTIETH POINT	9.00	9.05	9.10	9.15	9.20	9.25	9.30	9.35	9.40	9.45	9.50	9.55	9.60	9.65	9.70	9.75	9.80	9.85	9.90	9.95	10.00	10.05	10.10	10.15	10.20	10.25	10.30	10.35	10.40	10.45	10.50	10.55	10.60	10.65	10.70	10.75	10.80	10.85	10.90	10.95	11.00
GIRDER D.L. DEFLECTION (FT.)	0	0.001	0.002	0.002	0.003	0.004	0.006	0.008	0.010	0.012	0.014	0.013	0.012	0.010	0.009	0.008	0.006	0.005	0.003	0.002	0	0.001	0.002	0.003	0.004	0.005	0.006	0.007	0.008	0.009	0.010	0.010	0.009	0.009	0.008	0.008	0.006	0.005	0.003	0.002	0
TOTAL D.L.LESS GIRDER D.L.DEFLECTION(FT.)	0	0.004	0.007	0.011	0.014	0.018	0.026	0.034	0.042	0.050	0.058	0.053	0.048	0.043	0.038	0.033	0.026	0.020	0.013	0.007	0	0.005	0.009	0.014	0.018	0.023	0.028	0.033	0.038	0.043	0.048	0.046	0.045	0.043	0.042	0.040	0.032	0.024	0.016	0.008	0
TOTAL D.L. DEFLECTION (FT.)	0	0.005	0.009	0.013	0.017	0.022	0.032	0.042	0.052	0.062	0.072	0.066	0.060	0.053	0.046	0.041	0.032	0.025	0.016	0.009	0	0.006	0.011	0.017	0.022	0.028	0.034	0.040	0.046	0.052	0.058	0.056	0.054	0.052	0.050	0.048	0.038	0.029	0.019	0.010	0

SPANS 9 & 10

LIDAZ:[200,32]SFCAM0214.90R

INITIAL	DATE	
DESIGNED BY B. A. A.	11-87	CHECKED BY
CHECKED BY J. L. S.	1-88	
DETAILED BY S. S.	11-87	

DeLeuw, Cather & Company Denver, CO.

DIVISION OF HIGHWAYS

STEEL BOX GIRDER
CAMBER DIAGRAM

UNIT ②

Designer B. Arright	Structure Numbers	F-16-OL
Detailer S. Shibao		
Drawing Number B-36 of 57 Drawings		

Revision Dates (Preliminary Stage Only)

STATE OF COLORADO
STATE DEPARTMENT OF HIGHWAYS
DIVISION OF HIGHWAYS
D. C. H. ROUTE 126
REV. FEB. 1984

AS CONSTRUCTED		
NO REVISIONS	REVISED	VOID

FED. ROAD REGION	DIVISION	PROJ. NO.	SHEET NO.	SHEET TOTALS
VIII	COLO.	IR 25-2(208)	127	

REVISIONS

ADDITIONAL LONGITUDINAL DECK REINF. AT PIERS				
PIER	NUMBER	SIZE	L_{BACK}	L_{AHEAD}
Pier 4G	50	#7	35'-9"	33'-0"
Pier 5G	46	#7	31'-3"	42'-3"
Pier 6G	46	#7	57'-0"	34'-9"

~~SPACING FOR TRANSVERSE REINFORCING AND FORM FLUTES~~

WEB	STA. ~~805+19.75-805+35.99~~	STA. 805+35.99-807+19.33	~~STA. 807+19.33-815+09.00~~
Web 1	Varies 5.60" to 5.66"	~~5.66"~~	5.77"
Web 2	Varies 5.72" to 5.78"	~~5.78"~~	5.85"
Web 3	~~5.88"~~	5.88"	~~5.92"~~
~~Web 4~~	6.00"	6.00"	~~6.00"~~

BRIDGE DRAIN (SPECIAL) LOCATIONS
Sta. 803+22.46, Left Side
Sta. 805+39.33, Left Side

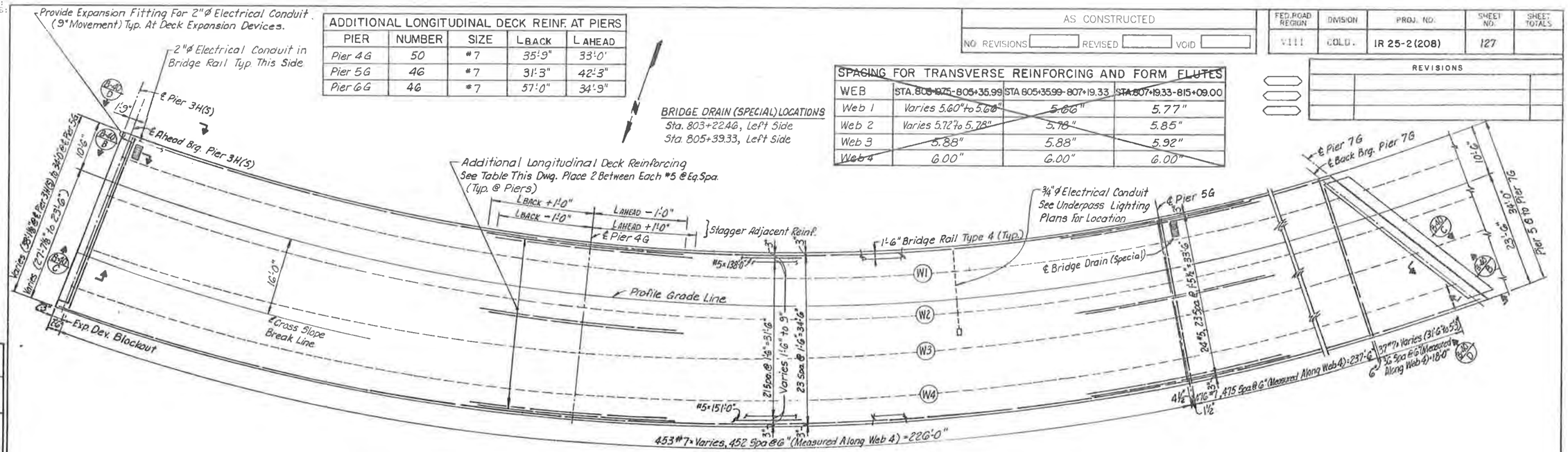

DECK PLAN
TOP REINFORCEMENT

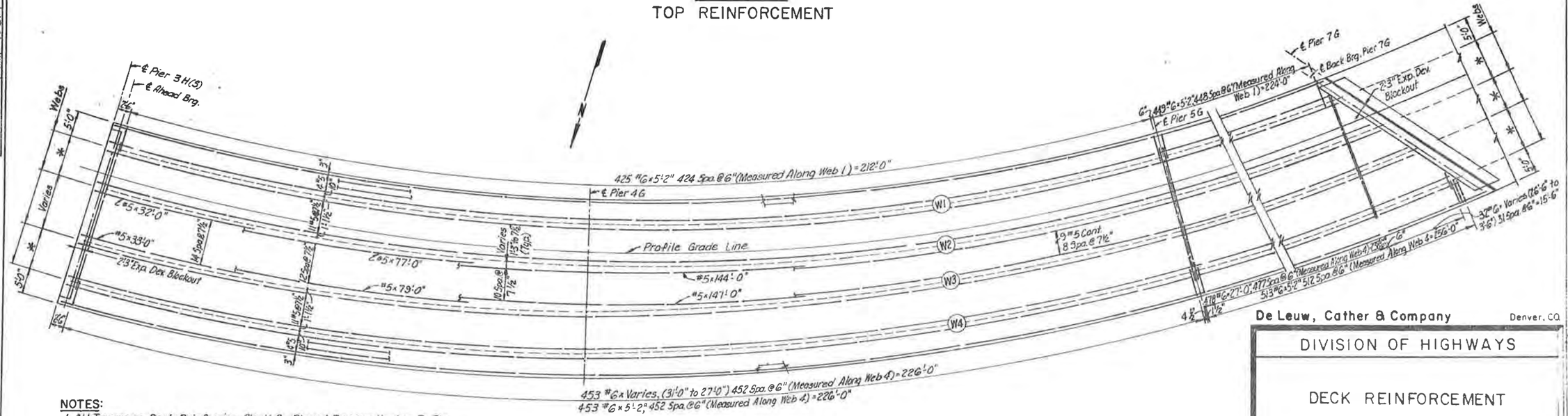

DECK PLAN
BOTTOM REINFORCEMENT

NOTES:
1. All Transverse Deck Reinforcing Shall Be Placed Perpendicular To The Webs (Radially). From Pier 3H(S) To Pier 5G Webs 3 And 4 Are Not Concentric With Webs 1 And 2, So Place Transverse Deck Reinforcing Perpendicular To Webs 1 And 2 (Radially).
2. See Dwg. No. B-38 For Notes 2 thru 6.

* = Dimension Varies With Cross-Slope. See Framing Plans, Dwg. Nos. B-20, B-21 And B-25.

	INITIAL	DATE
DESIGNED BY	MRM	9-87
CHECKED BY	JAB	1-88
DETAILED BY	RMH	9-87

	INITIAL	DATE
CHECKED BY	MRM	11-87
	JAB	12-87

De Leuw, Cather & Company — Denver, CO

DIVISION OF HIGHWAYS

DECK REINFORCEMENT

UNIT 1

Designer	M. Merklinger	Structure Numbers	F-16-DL
Detailer	R. Hinshaw		
Drawing Number B-37		of 57	Drawings

Revision Dates | Preliminary Stage Only

STATE OF COLORADO
STATE DEPARTMENT OF HIGHWAYS
DIVISION OF HIGHWAYS
U. S. H. FORM 12-261
REV. FEB. 1985

AS CONSTRUCTED		
NO REVISIONS	REVISED	VOID

FED.ROAD REGION	DIVISION	PROJ. NO.	SHEET NO.	SHEET TOTALS
VIII	COLO.	IR 25-2(208)	128	

REVISIONS		

ADDITIONAL LONGITUDINAL DECK REINF. AT PIERS				
PIER	NUMBER	SIZE	L_{BACK}	L_{AHEAD}
Pier 8G	4G	#7	43'-0"	26'-3"
Pier 9G	4G	#7	58'-0"	44'-3"
Pier 10G	4G	#7	46'-9"	61'-9"
Pier 11G	4G	#7	33'-0"	40'-0"
Pier 12G	4G	#7	30'-6"	33'-0"

~~SPACING FOR TRANSVERSE REINFORCING AND FORM FLUTES~~	
WEB	~~Sta 807+19.33 - 815+09.00~~
WEB 1	~~5.77"~~
WEB 2	~~5.85"~~
WEB 3	~~5.92"~~
WEB 4	~~6.00"~~

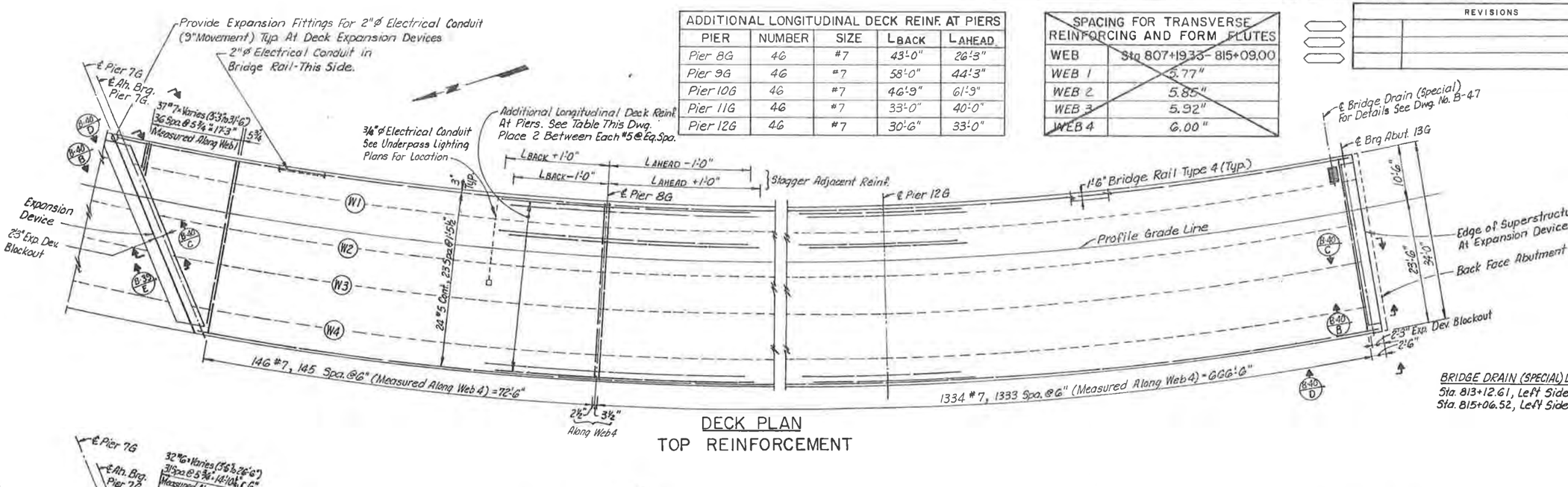

DECK PLAN
TOP REINFORCEMENT

BRIDGE DRAIN (SPECIAL) LOCATIONS
Sta. 813+12.61, Left Side
Sta. 815+06.52, Left Side

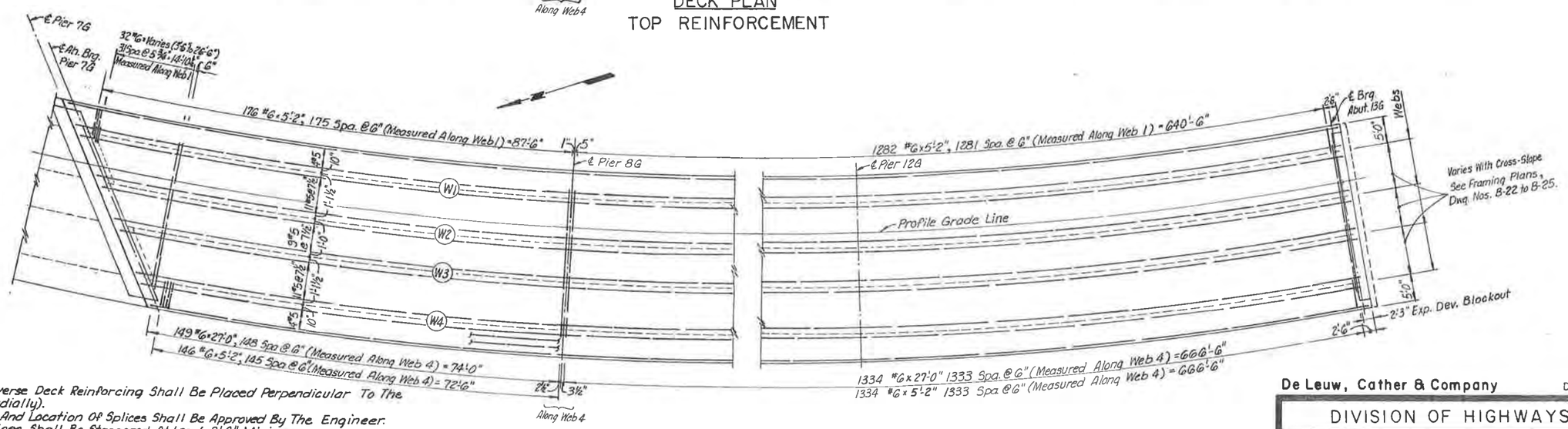

NOTES:

1. All Transverse Deck Reinforcing Shall Be Placed Perpendicular To The Webs (Radially).
2. Number And Location Of Splices Shall Be Approved By The Engineer.
3. Lap Splices Shall Be Staggered At Least 2'-6" Minimum.
4. All Concrete From Previous Pour Shall Be Placed 24 Hours Minimum Before Starting New Pour.
5. For Bridge Rail Reinforcing Extending Into Deck, See Dwg. No. B-46.
6. At Bridge Drains Near Piers 5G And 11G Additional Longitudinal Reinforcement At Piers Shall Have 180° Hooks As Shown On Dwg No. B-47.

DECK PLAN
BOTTOM REINFORCEMENT

	INITIAL	DATE
DESIGNED BY	MRM	9-87
CHECKED BY	JAB	1-88
DETAILED BY	PMH	9-87
CHECKED BY	JAB	12-87
CHECKED BY	MRM	10-87

De Leuw, Cather & Company — Denver, CO

DIVISION OF HIGHWAYS

DECK REINFORCEMENT

UNIT ②

Designer M. Merklinger		Structure Numbers	F-16-OL
Detailer R. Hinshaw			
Drawing Number B-38	of 57	Drawings	

Revision Dates (Preliminary Stage Only)

STATE OF COLORADO
STATE DEPARTMENT OF HIGHWAYS
DIVISION OF HIGHWAYS
D. C. H. FORM 12.126
REV. FEB 1984

AS CONSTRUCTED		
NO REVISIONS	REVISED	VOID

FED. ROAD REGION	DIVISION	PROJ. NO.	SHEET NO.	SHEET TOTALS
VIII	COLO.	IR 25-2(208)	129	

REVISIONS		

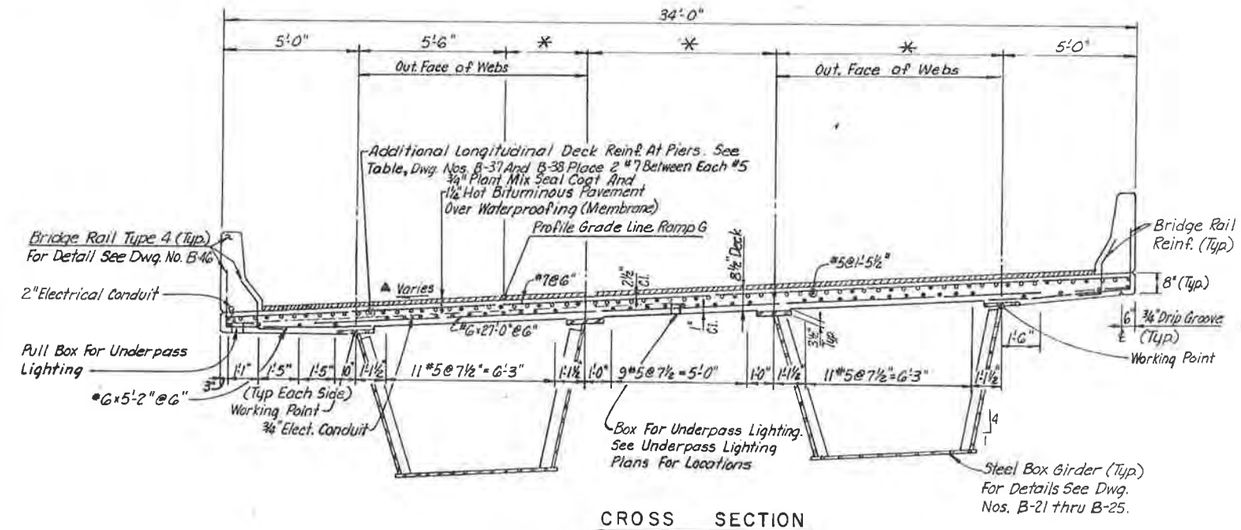

CROSS SECTION
UNIT 1 AND 2
Sta. 805+35.99 to Sta. 815+09.00

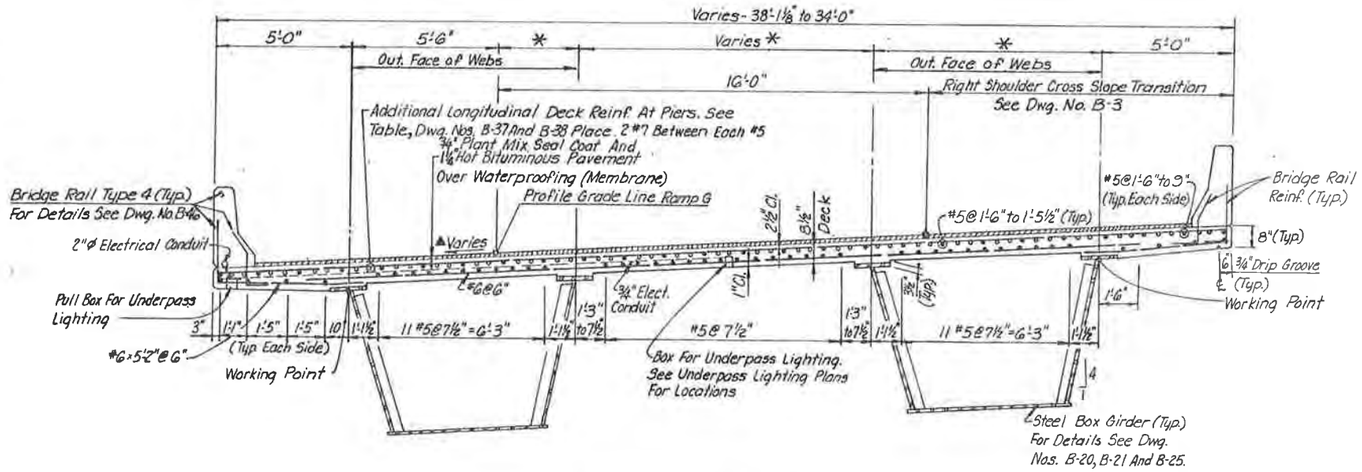

CROSS SECTION
UNIT 1
Sta. 803+19.75 to Sta. 805+35.99

NOTE: Sections Are Taken Along A Radial Line. Dimensions Marked * Vary With The Cross-Slope.

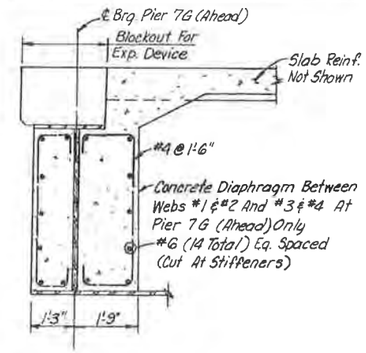

SECTION B-38 / E

NOTE: Provide 1'-4" x 2'-2" Opening in Diaphragm To Match Opening In Steel Diaphragm Web, See Dwg. No. B-30.

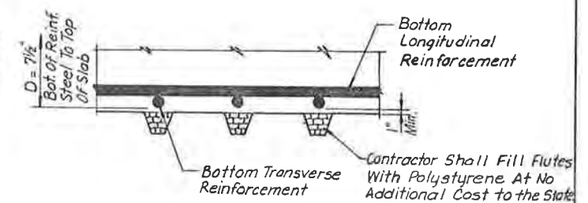

PERMANENT DECK FORM DETAIL

DECK SHALL BE FORMED USING PERMANENT STEEL BRIDGE DECK FORMS. FORM FLUTES AND TRANSVERSE SLAB REINFORCEMENT SHALL BE PLACED PERPENDICULAR TO THE ℄ GIRDERS. REQUIRED "D" VALUES MUST BE MAINTAINED. TWO SETS OF SHOP DRAWINGS AS DESCRIBED IN SUBSECTION 601.10 OF THE STANDARD SPECIFICATIONS SHALL BE SUBMITTED TO THE ENGINEER FOR INFORMATION ONLY. THE DRAWINGS WILL NOT BE APPROVED AND RETURNED TO THE CONTRACTOR. ALL COSTS OF ADDITIONAL MATERIAL AND LABOR REQUIRED TO USE FORMS SHALL BE BORNE BY THE CONTRACTOR.

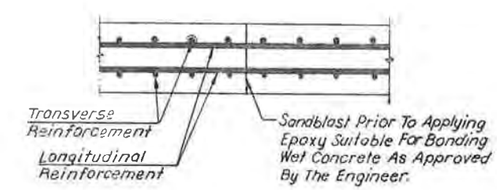

OPTIONAL CONSTRUCTION JOINT DETAIL
(SEE DWG. NO. B-26)

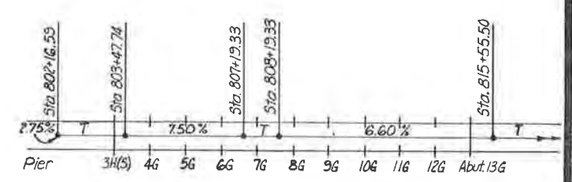

▲ VARIATION IN CROSS-SLOPE

De Leuw, Cather & Company — Denver, CO.

DIVISION OF HIGHWAYS

DECK REINFORCEMENT AND SECTIONS UNITS 1 AND 2

Designer M. Merklinger		Structure Numbers	F-16-OL
Detailer R. Hinshaw			
Drawing Number B-39	of 57	Drawings	

Revision Dates (Preliminary Stage Only)

INITIAL	DATE	DESIGNED BY	CHECKED BY	DETAILED BY	CHECKED BY
MRM	8-87	MRM	JAB	RMH	
JAB	1-88	JAB			
RMH	9-87				

MRM	10-87	
JAB	12-87	

STATE OF COLORADO
STATE DEPARTMENT OF HIGHWAYS
DIVISION OF HIGHWAYS
D. O. H. FORM NO. 1261
REV. FEB. 1984

AS CONSTRUCTED		
NO REVISIONS	REVISED	VOID

FED. ROAD REGION	DIVISION	PROJ. NO.	SHEET NO.	SHEET TOTALS
VIII	COLO.	IR 25-2(208)	130	

REVISIONS

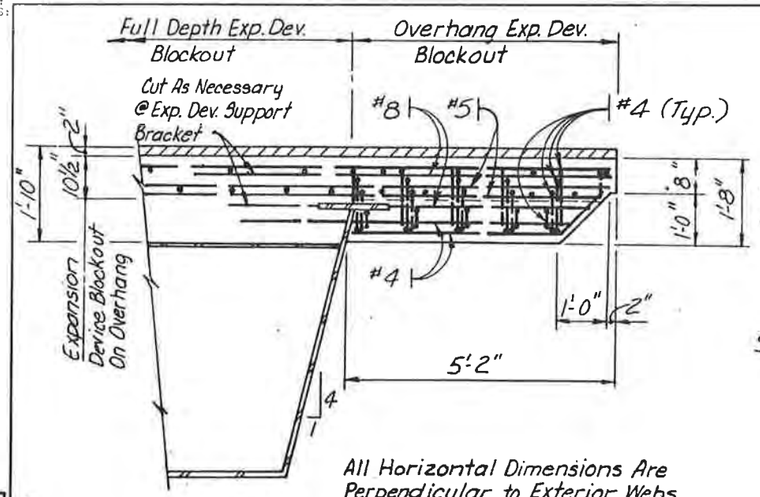

All Horizontal Dimensions Are Perpendicular to Exterior Webs And Edge of Deck.

SECTION B-40 A

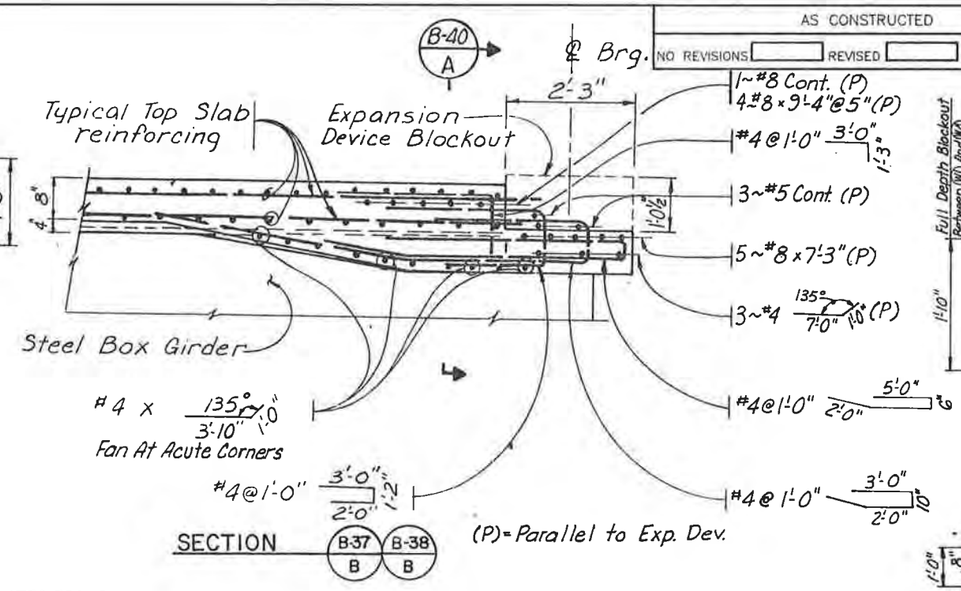

SECTION B-37 B-38 B

(P) = Parallel to Exp. Dev.

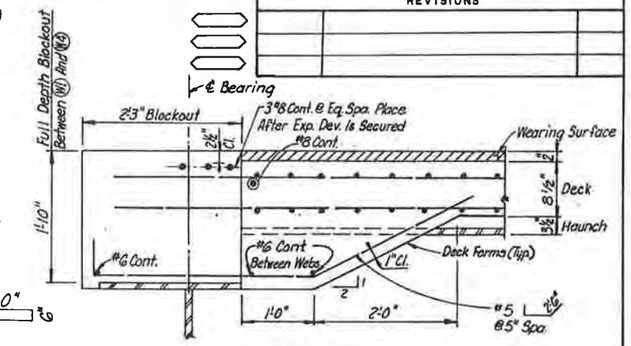

SECTION B-37 B-38 C

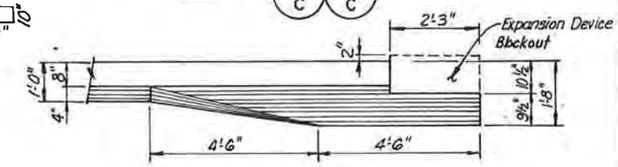

ELEVATION B-37 B-38 D

BRIDGE RAIL COVER PLATES REQUIRED

Pier 3H(5)	Right & Left
Pier 7G	Right & Left
Abut. 13G	Right & Left

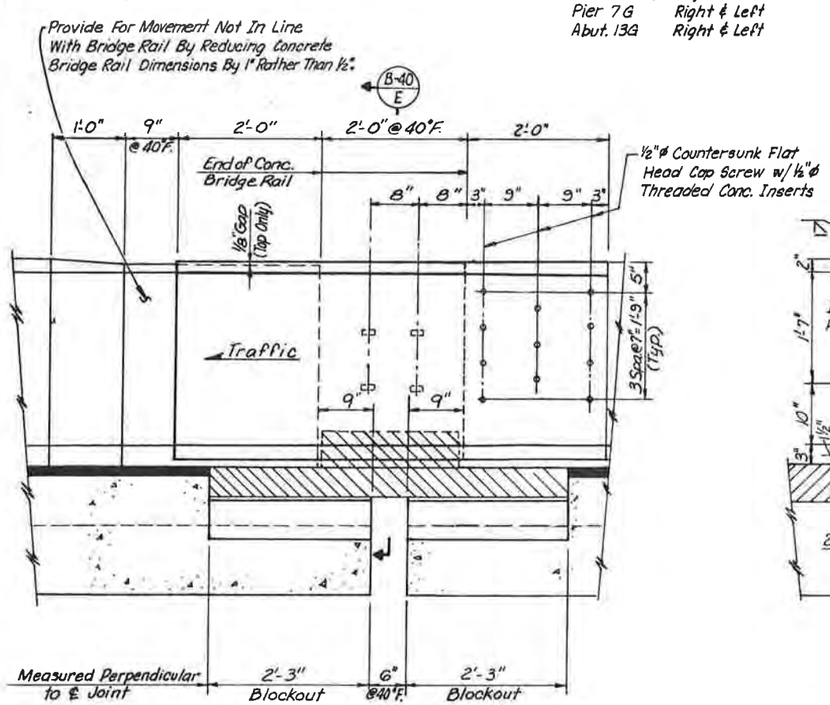

ELEVATION – RIGHT RAIL
INSIDE FACE

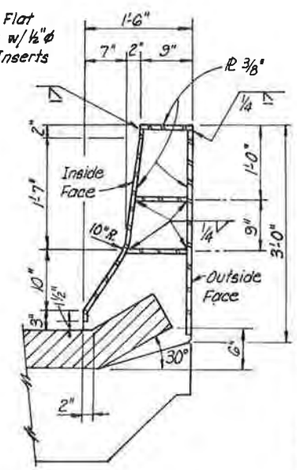

SECTION B-40 E

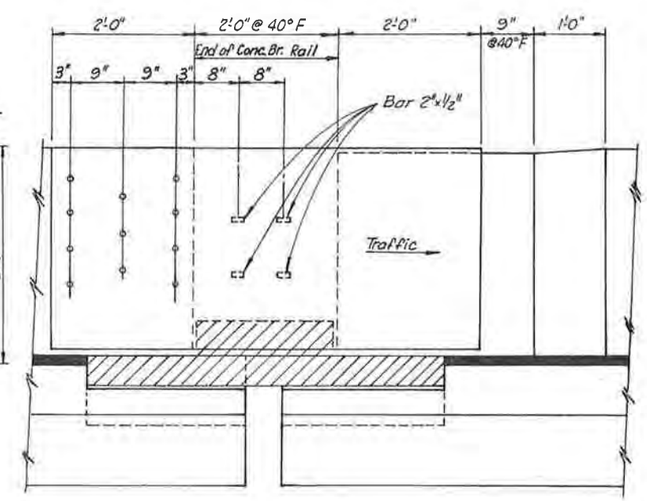

ELEVATION – RIGHT RAIL
OUTSIDE FACE

NOTES:
1. Visible Metal Surfaces on Cover Plates Shall Be Treated With A Colored Acrylic Coating to Match the Concrete Bridge Rail.
2. Cover Plates And Related Hardware Shall Not Be Paid For Separately, But Shall Be Included In Payment For Item No. 518.

		INITIAL	DATE	CHECKED BY	DATE	INITIAL
DESIGNED BY	M.R.M.	M.R.M.	10-87			
CHECKED BY	J.A.B.	J.A.B.	12-87			
DETAILED BY	R.M.H.	R.M.H.	9-87			

De Leuw, Cather & Company Denver, CO.

DIVISION OF HIGHWAYS

DECK REINFORCING AT EXPANSION DEVICES

Designer M. Merklinger		Structure Numbers	F-16-OL
Detailer R. Hinshaw			
Drawing Number B-40	of 57	Drawings	

Revision Dates (Preliminary Stage Only)

STATE OF COLORADO
STATE DEPARTMENT OF HIGHWAYS
DIVISION OF HIGHWAYS
S. G. H. FORM NO. 176
REV. FEB. 1984

AS CONSTRUCTED		
NO REVISIONS	REVISED	VOID

FED. ROAD REGION	DIVISION	PROJ. NO.	SHEET NO.	SHEET TOTALS
VIII	COLO.	IR 25-2 (208)	131	

REVISIONS

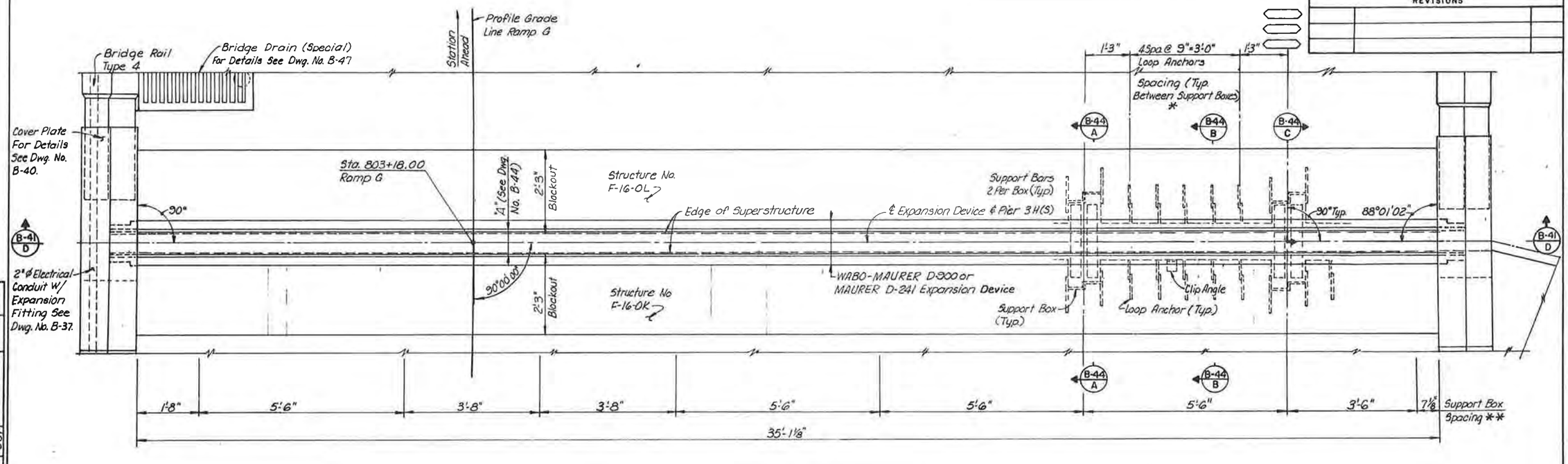

PLAN AT PIER 3H(S)

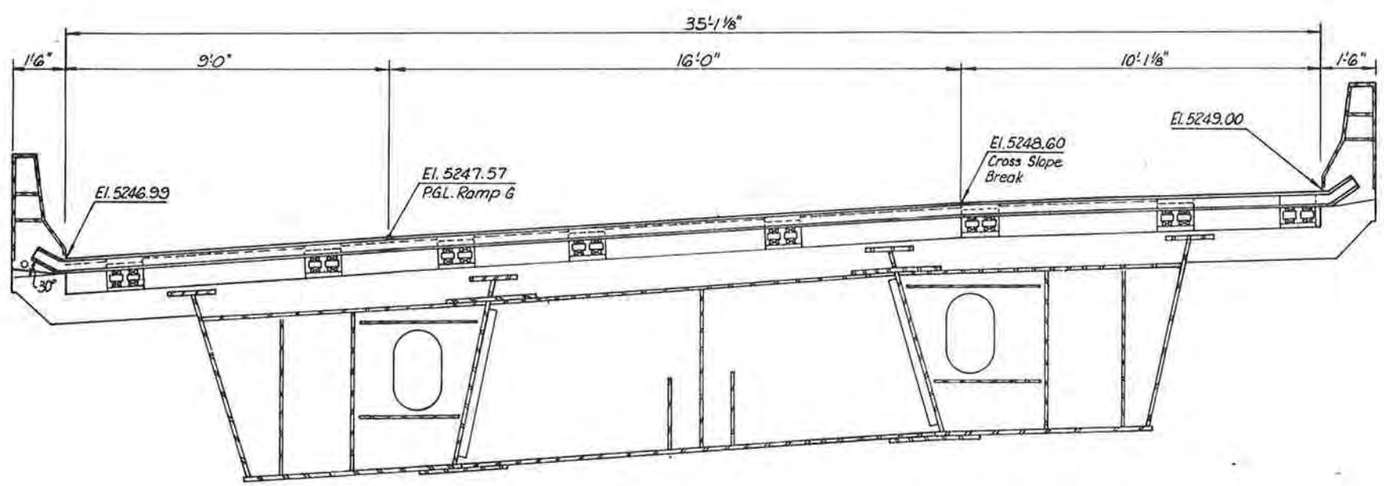

SECTION B-41 D

* Adjust As Req'd At P/S Anchorages.
** Spacing May Be Adjusted If Contractor Verifies That New Locations Will Not Conflict With P/S Anchorages.

	INITIAL	DATE	CHECKED BY	INITIAL	DATE
DESIGNED BY	M.R.M.	8-87		M.R.M.	8-87
CHECKED BY	J.A.B.	12-87		J.A.B.	12-87
DETAILED BY	R.W.H.	8-87			

De Leuw, Cather & Company — Denver, CO

DIVISION OF HIGHWAYS

EXPANSION DEVICE DETAILS (0 - 9 INCH) PIER 3H(S)

Designer	M. Merklinger	Structure Numbers	F-16-OL
Detailer	R. Hinshaw		
Drawing Number	B-41	of 57	Drawings

Revision Dates (Preliminary Stage Only)

STATE OF COLORADO
STATE DEPARTMENT OF HIGHWAYS
DIVISION OF HIGHWAYS:
D. O. H. FORM NO. 126:
REV. FEB. 1984

AS CONSTRUCTED		
NO REVISIONS	REVISED	VOID

FED. ROAD REGION	DIVISION	PROJ. NO.	SHEET NO.	SHEET TOTALS
VIII	COLO.	I R 25-2 (208)	132	

REVISIONS

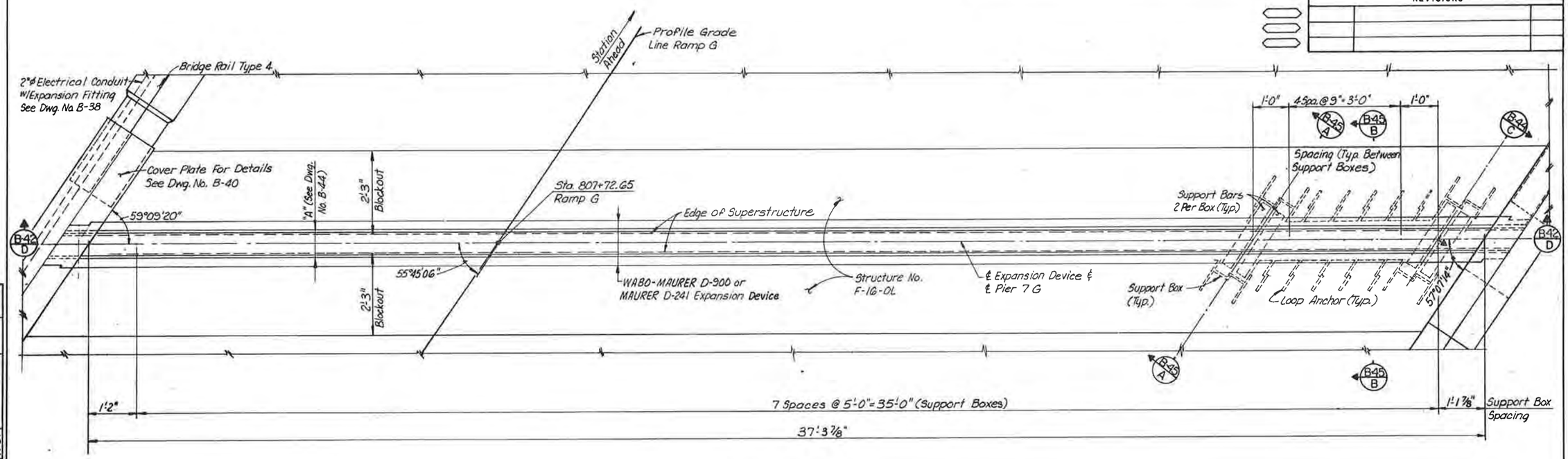

PLAN AT PIER 7G

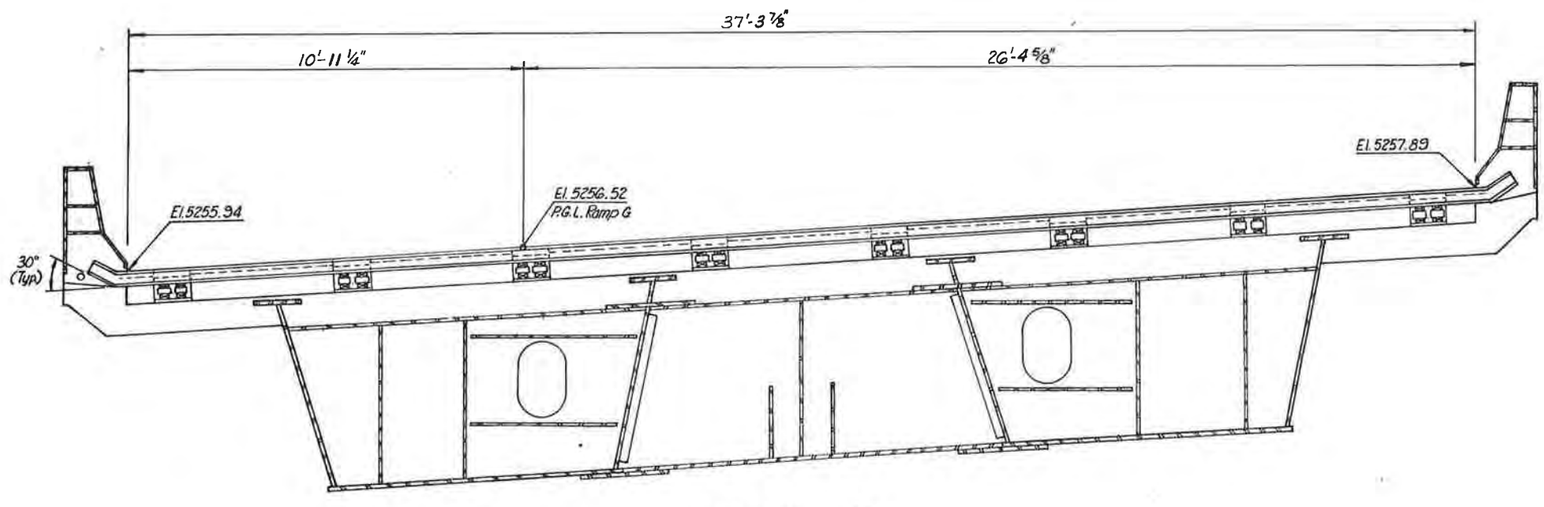

SECTION B-42 D

INITIAL	DATE
DESIGNED BY M.R.M.	11-87
CHECKED BY J.A.B.	12-87
DETAILED BY R.M.H.	11-87
CHECKED BY M.R.M.	11-87
CHECKED BY J.A.B.	12-87

De Leuw, Cather & Company Denver, CO

DIVISION OF HIGHWAYS

EXPANSION DEVICE DETAILS (0 - 9 INCH) PIER 7G

Designer M. Merklinger		Structure Numbers	F-16-OL
Detailer R. Hinshaw			
Drawing Number B-42	of 57	Drawings	

Revision Dates (Preliminary Stage Only)

STATE OF COLORADO
STATE DEPARTMENT OF HIGHWAYS
DIVISION OF HIGHWAYS:
D. O. H. FORM NO. 126:
REV. FEB. 1984

AS CONSTRUCTED		
NO REVISIONS	REVISED	VOID

FED. ROAD REGION	DIVISION	PROJ. NO.	SHEET NO.	SHEET TOTALS
VIII	COLO.	IR 25-2(208)	133	

REVISIONS

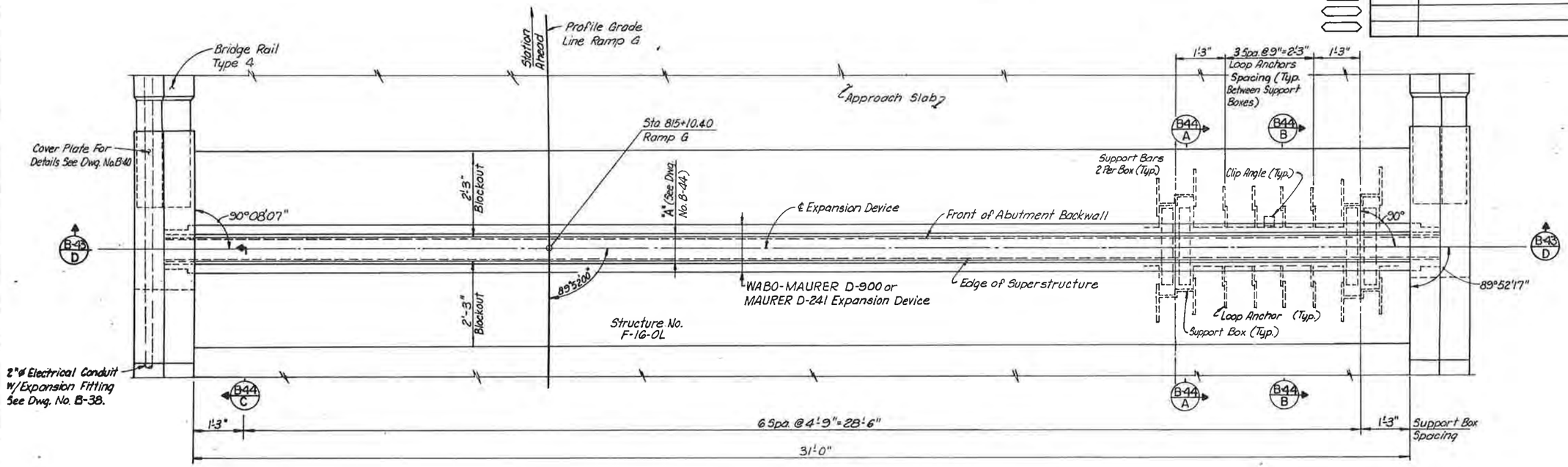

PLAN AT ABUTMENT 13G

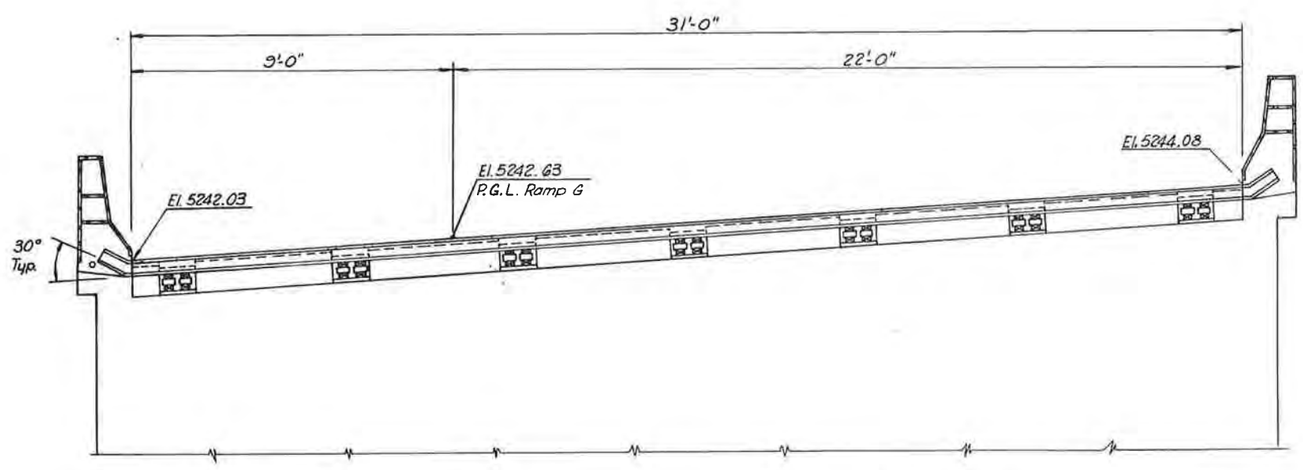

SECTION B-43 D

	INITIAL	DATE	CHECKED BY	M.E.M.	11-87
DESIGNED BY	M.E.M.	8-87		J.A.B.	12-87
CHECKED BY	J.A.B.	12-87			
DETAILED BY	R.M.H.	8-87			

De Leuw, Cather & Company — Denver, CO.

DIVISION OF HIGHWAYS

EXPANSION DEVICE DETAILS (0 - 9 INCH) ABUTMENT 13 G

Designer	M. Merklinger	Structure Numbers	F-16-OL
Detailer	R. Hinshaw		
Drawing Number B-43		of 57	Drawings

Revision Dates (Preliminary Stage Only)

AS CONSTRUCTED		
NO REVISIONS	REVISED	VOID

FED. ROAD REGION	DIVISION	PROJ. NO.	SHEET NO.	SHEET TOTALS
VIII	COLO.	IR 25-2(208)	134	

REVISIONS		

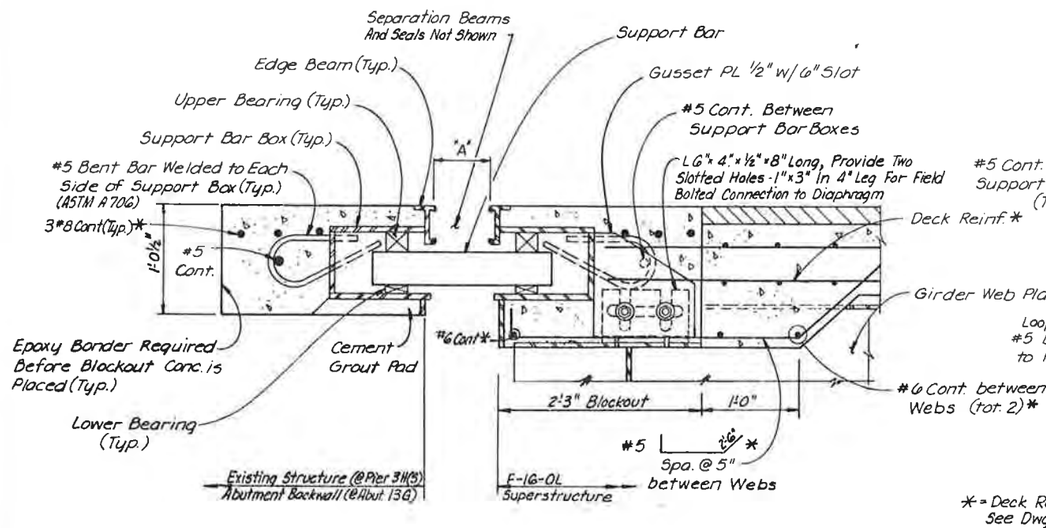

SECTION B-41 A / B-43 A

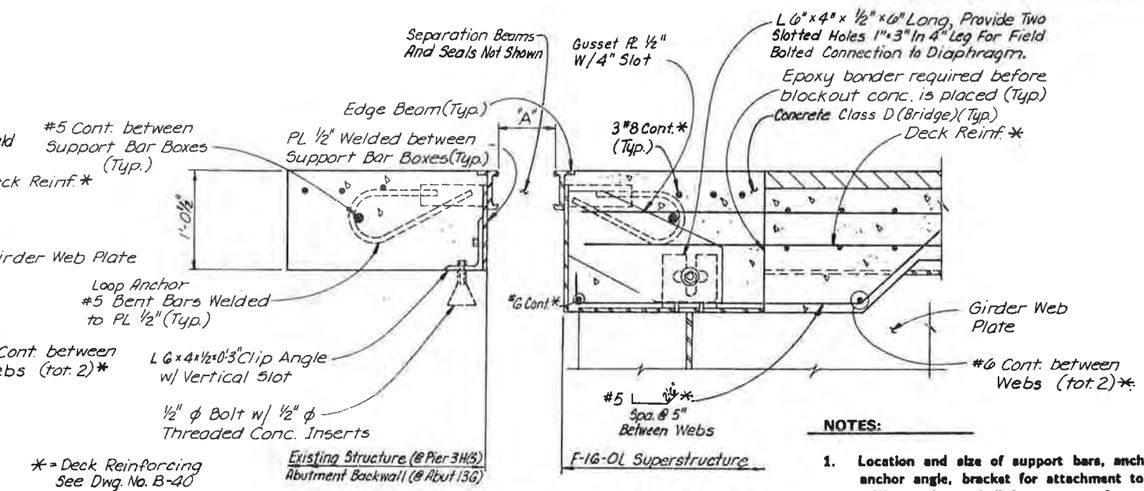

SECTION B-41 B / B-43 B

NOTES:

1. Location and size of support bars, anchor assembly, anchor angle, bracket for attachment to steel and stiffener plates shall be per manufacturer's drawings.
2. See table for dimension "A."
3. The expansion device shall be installed on grade, parallel to the slope and grade of the deck.
4. After the concrete has attained initial set, the attachments used to hold the expansion device assembly in its proper position shall be removed.
5. Do not paint steel surfaces in contact with concrete and elastomeric seals.
6. "A" dimensions are dependent upon the particular expansion device supplied and shall be shown on the shop drawings.
7. The shop drawings shall indicate the "A" dimensions at a range of temperatures from 30° F to 100° F assuming a mid-point temperature of 40° F.
8. The neoprene seals shall be supplied and installed in one continuous piece.

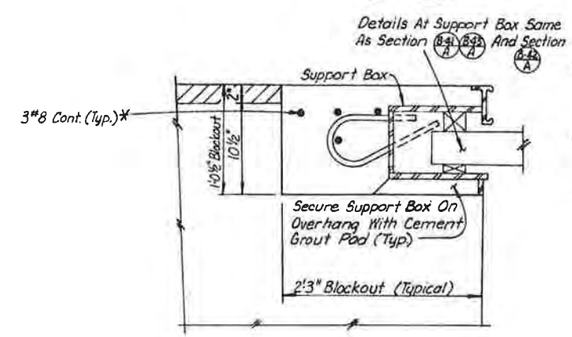

SECTION B-41 C / B-42 C / B-43 C

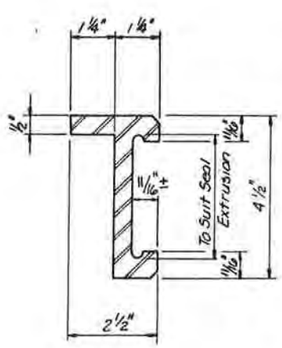

EDGE BEAM

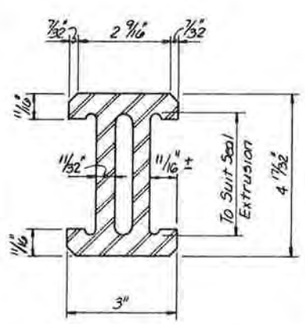

SEPARATION BEAM

"A" DIMENSION			
STRUCTURE	PIER 3H(S)	PIER 7G	ABUTMENT 13G
TEMPERATURE	DIMENSION "A"	DIMENSION "A"	DIMENSION "A"
30°F	10 11/16"	10 13/16"	10 3/4"
40°F	10½"	10½"	10½"
50°F	10 5/16"	10 3/16"	10¼"
60°F	10 3/16"	9⅞"	10"
70°F	10"	9 9/16"	9 11/16"
80°F	9 13/16"	9¼"	9 7/16"
90°F	9 11/16"	8 15/16"	9 3/16"
100°F	9½"	8⅝"	8 15/16"
Min "A" = 6"; Max. "A" = 15"			

	INITIAL	DATE
DESIGNED BY	M.P.M.	11-87
CHECKED BY	B.A.A.	1-88
DETAILED BY	R.M.H.	11-87
CHECKED BY	M.P.M.	11-87
	B.A.A.	1-88

De Leuw, Cather & Company — Denver, CO

DIVISION OF HIGHWAYS

EXPANSION DEVICE (0-9 INCH)

Designer M. Merklinger		Structure Numbers	F-16-OL
Detailer R. Hinshaw			
Drawing Number B-44	of 57		Drawings

Revision Dates (Preliminary Stage Only)

STATE OF COLORADO
STATE DEPARTMENT OF HIGHWAYS
DIVISION OF HIGHWAYS:
D. O. H. FORM NO. 117:
REV. OCT. 1983:

AS CONSTRUCTED			
NO REVISIONS	REVISED	VOID	

FED. ROAD REGION	DIVISION	PROJ. NO.	SHEET NO.	TOTAL SHEETS
VIII	COLO.	IR 25-2 (208)	135	

REVISIONS		

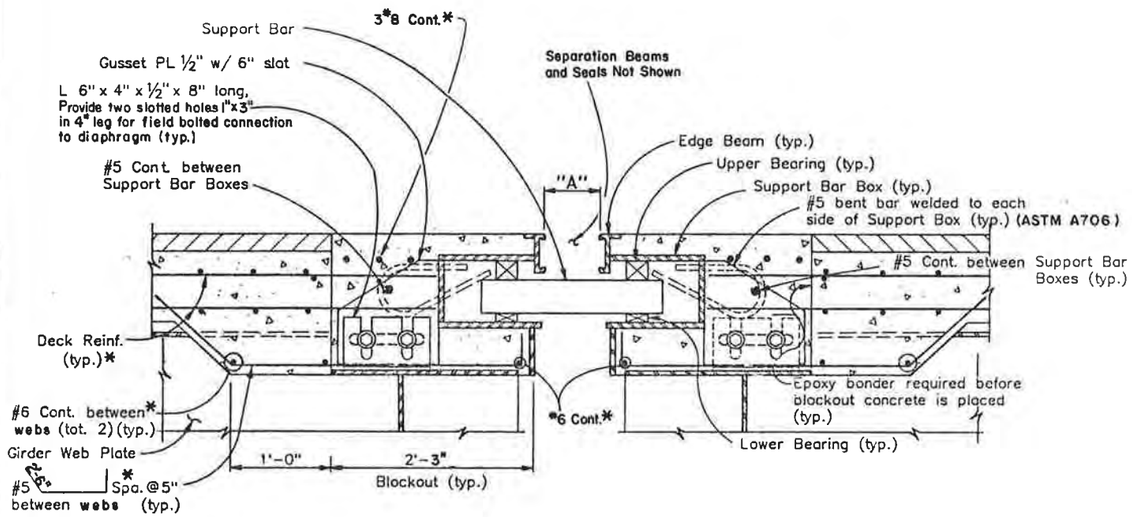

SECTION B-42/A

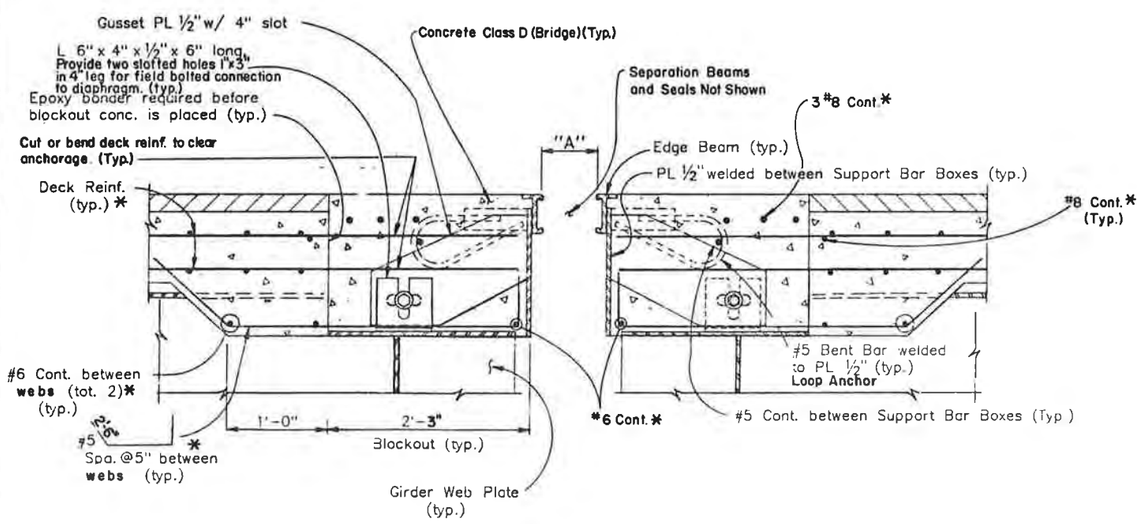

SECTION B-42/B

NOTES:
1. For table of "A" Dimensions and notes, see dwg. no B-44.
2. * = Deck Reinforcing, see dwg. no. B-40.

DESIGNED BY	MRM	DATE	11-87
DRAWN BY	BAA	DATE	1-88
CHECKED BY		DATE	
DESIGNED BY	MRM	DATE	11-87
DRAWN BY	BAA	DATE	1-88
DETAILED BY	RMH	DATE	11-87

DIVISION OF HIGHWAYS
EXPANSION DEVICE (0-9 INCH)
STEEL BOX GIRDER BRIDGE EXPANSION JOINT DETAILS

DESIGNER M. Merklinger	STRUCTURE NUMBERS	F-16-OL
DETAILER R. Hinshaw		
DRAWING NUMBER B-45	OF 57	DRAWINGS

REVISION DATES		(PRELIMINARY STAGE ONLY)
4-85	6/85	

EXPMDV34S

WD number 06/05 85 23:35:36 .DUNI:[DKPW.STDS.BSTDS] EXPMDV34S

AS CONSTRUCTED			
NO REVISIONS		REVISED		VOID	

FED. ROAD REGION	DIVISION	PROJ. NO.	SHEET NO.	TOTAL SHEETS
VIII	COLO.	IR 25-2(208)	136	

REVISIONS		

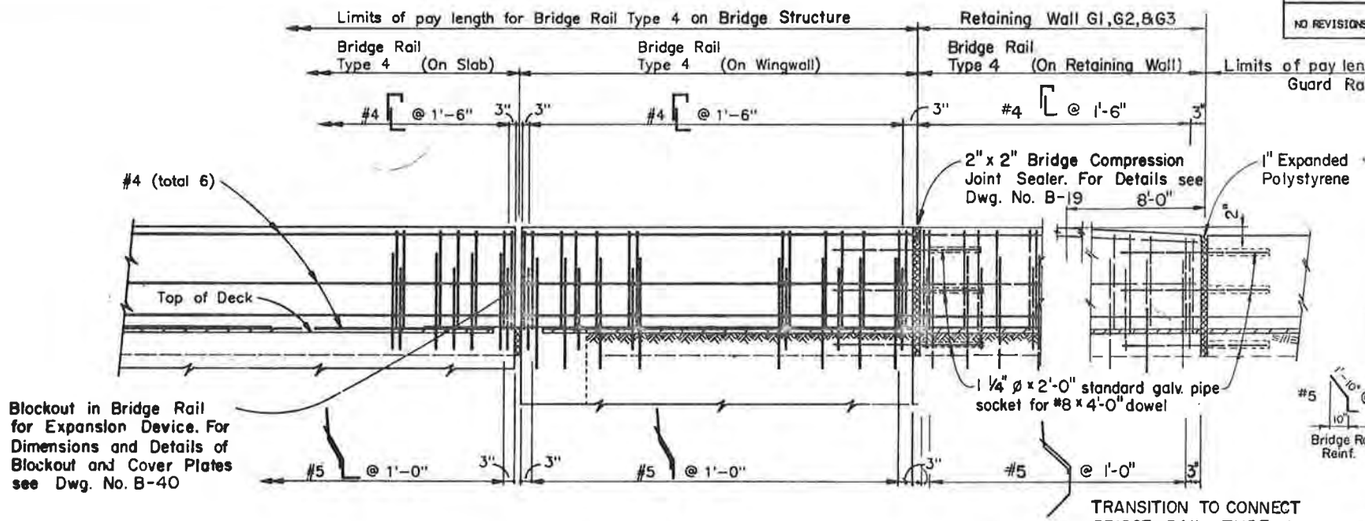

ELEVATION

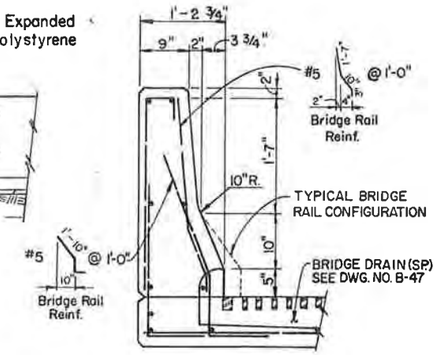

SECTION AT BRIDGE DRAIN (SPECIAL)

NOTE: Transition Bridge Rail 3'-0" Each Side Of Bridge Drain (Special)

BRIDGE STANDARD 16

NOTES

BACKFILL WINGWALLS AND RETAINING WALLS BEFORE BARRIER IS PLACED.

ALL BRIDGE RAIL CONCRETE SHALL BE CLASS D.

LONGITUDINAL REINFORCEMENT SHALL STOP AT ALL EXPANSION JOINTS.

BRIDGE RAIL SHALL BE CONSTRUCTED PLUMB.

BRIDGE RAIL CONCRETE (CLASS D) AND BRIDGE RAIL REINFORCEMENT SHALL BE INCLUDED IN ITEM 606 – BRIDGE RAIL TYPE 4.

REINFORCING STEEL SHALL BE EPOXY COATED.

DESIGN DATA

REINFORCED CONCRETE:

CLASS D CONCRETE: f_c = 1,800 psi, n = 8

REINFORCING STEEL: f_s = 24,000 psi

INFORMATION ONLY

Description	Unit	Per Lin.Ft.
Concrete Class D	Cu. Yd.	0.11
Reinforcing Steel (Slab)	Lb.	13.8
" " (Wing Wall)	Lb.	14.2
" " (Ret. Wall)	Lb.	14.7

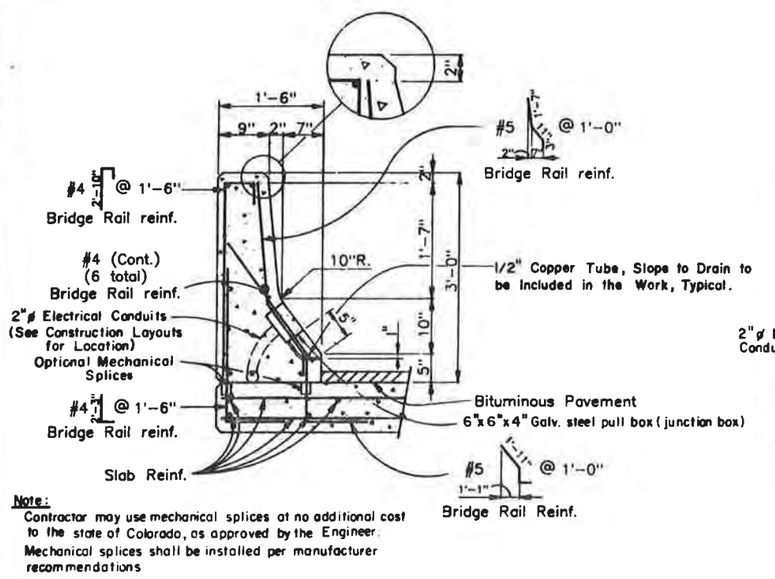

Note:
Contractor may use mechanical splices at no additional cost to the state of Colorado, as approved by the Engineer.
Mechanical splices shall be installed per manufacturer recommendations

SECTION AT SLAB

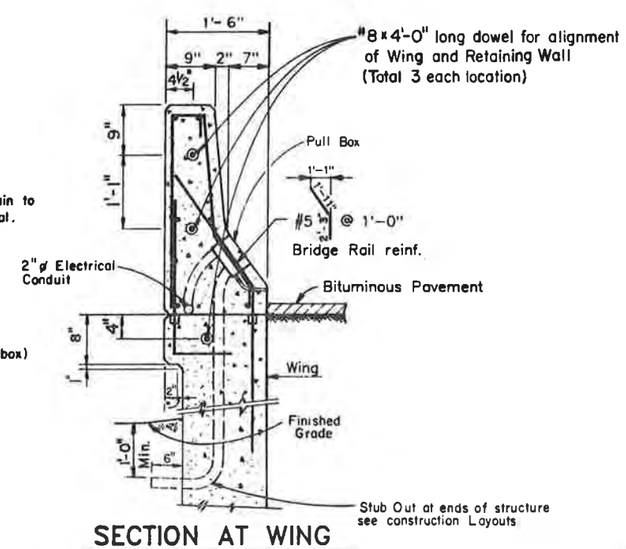

SECTION AT WING

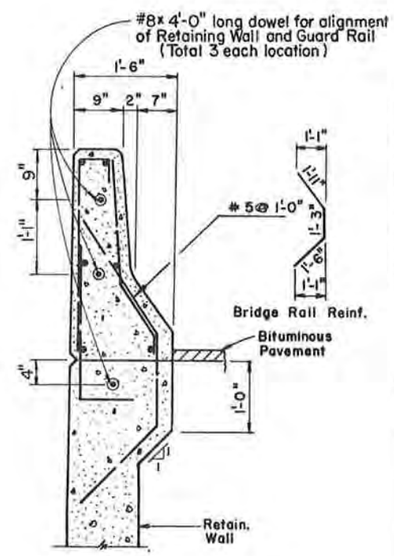

SECTION AT RETAINING WALL

DIVISION OF HIGHWAYS

BRIDGE RAIL TYPE 4

DESIGNER C.D.O.H.	STRUCTURE NUMBERS	F-16-OL
DETAILER R. Hinshaw		
DRAWING NUMBER B-46	OF 57	DRAWINGS

REVISION DATES	(PRELIMINARY STAGE ONLY)						
6/85							16

BRSTD16

DESIGNED BY	INITIAL	DATE	CHECKED BY
	C.D.O.H.	6-85	
CHECKED BY	J.L.S.	10-97	
DETAILED BY	R.M.H.	10-97	
	M.P.M.	10-97	
	B.A.A.	1-98	

E OF COLORADO
E DEPARTMENT OF HIGHWAYS
SION OF HIGHWAYS
1, HS-FORM NO. 117
OCT. 1980
HD NUMBER 06/06/95 18:45:33 _DUAL (DRAW.STDS.HSTDS) BRSTD16

STATE OF COLORADO
STATE DEPARTMENT OF HIGHWAYS
STATEWIDE DIV. OF HIGHWAYS
H.B.P.H. FORM NO. 1261
REV. FEB. 1967

AS CONSTRUCTED		
NO REVISIONS	REVISED	VOID

FED. ROAD REGION	DIVISION	PROJ. NO.	SHEET NO.	SHEET TOTALS
	COLO.	IR 25-2(206)	137	

REVISIONS		

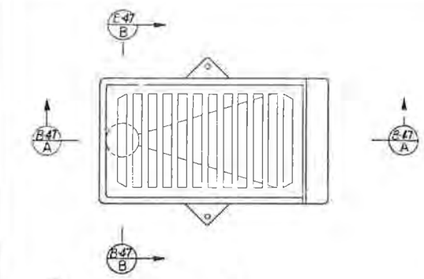

PLAN

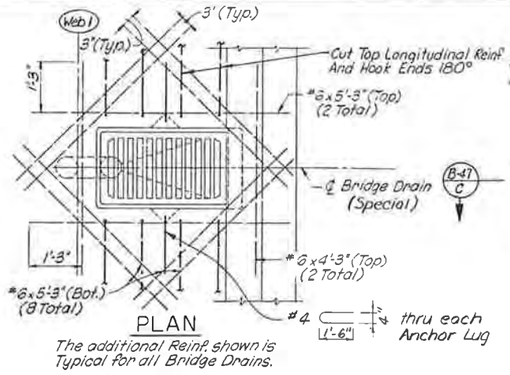

PLAN

The additional Reinf. shown is Typical for all Bridge Drains.

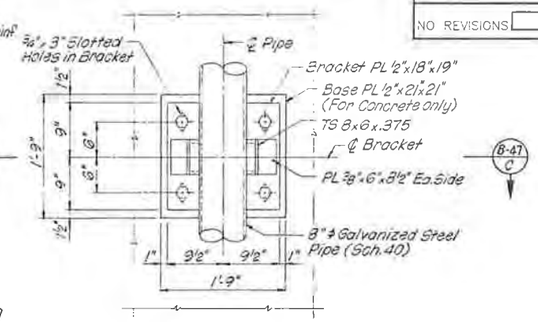

ELEVATION

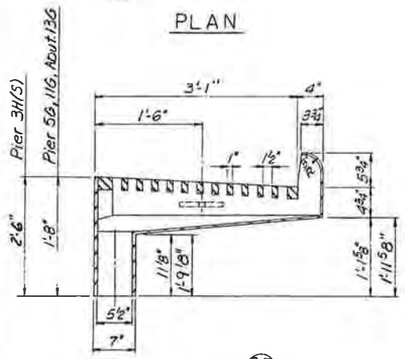

SECTION B-47 A

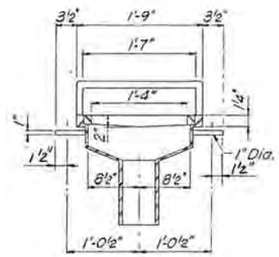

SECTION B-47 B

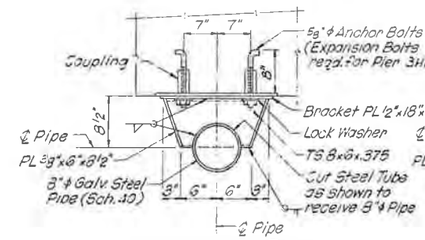

SECTION B-47 C
AT CONCRETE

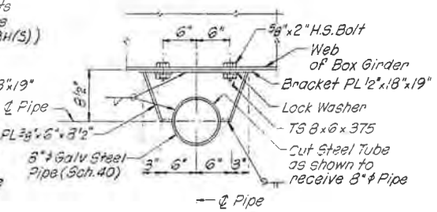

SECTION B-47 C
AT STEEL

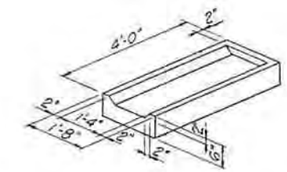

SPLASH BLOCK DETAIL

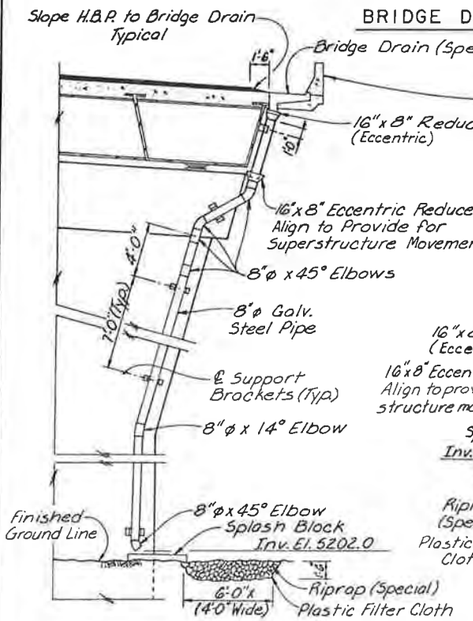

BRIDGE DRAIN (SPECIAL)

PIER 3H(S)
(Looking Back on Stationing)

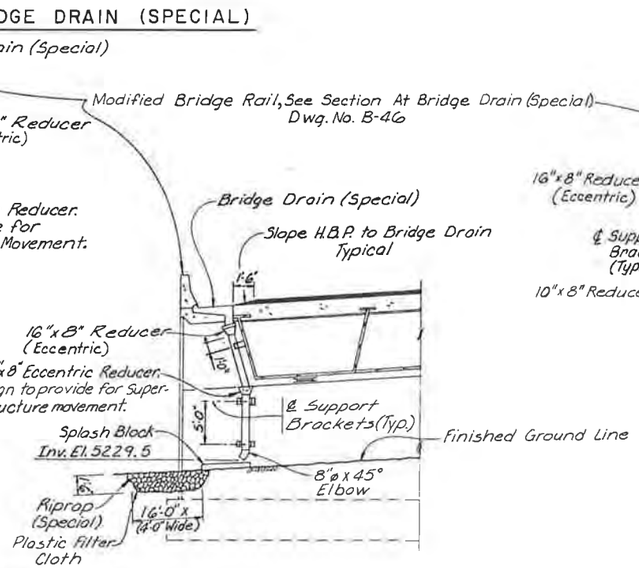

ABUTMENT 13G
(Looking Ahead on Stationing)

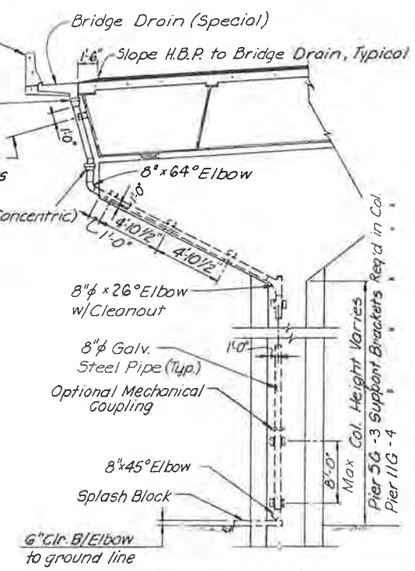

PIER 5G*, 11G*
(Looking Ahead on Stationing)

SUPPORT BRACKET
(Galvanized after Fabrication)

DRAINAGE NOTES

1. For Location of Bridge Drains, See Deck Plans, Dwg No. B-37 & B-38
2. Cut Slab Reinforcing Bars to Clear Bridge Drains. Additional Reinf. Shall be Set Between Top and Bottom Slab Reinf. Bend Bridge Rail Reinf.
3. Cost of Furnishing and Installing 8" ϕ Pipe, Splash Blocks, Support Brackets, Bridge Drains, and other necessary Drainage System Incidentals shall be Included in Bridge Drain (Special).
4. Locate Bridge Drain (Special) to Clear Top Flange of Box Girder.
5. All Visible Galvanized Metal Surfaces For Bridge Drainage Shall Be Treated With A Colored Acrylic Coating To Match The Adjacent Concrete Surfaces (Light Tone For Superstructure And Dark Tone For Substructure). Galvanized Metal Surfaces Shall Be Chemically Treated With A Compound Designed To Neutralize The Effects of The Galvanizing (Lithoform, Stibbley, Solfo Metallic Coating, Etc. Used In Accordance With The Manufacturer's Recommendations Before The Acrylic Coating Is Applied. The Coating Will Not Be Measured And Paid For Separately But Shall Be Included In The Work.

* Drain Pipe on Back Side of Column

De Leuw, Cather & Company — Denver, CO

DIVISION OF HIGHWAYS

BRIDGE DRAIN (SPECIAL)

Designer	M. Merklinger	Structure Numbers	F-16-OL
Detailer	D. Kurschinski		
Drawing Number	B-47	of 57	Drawings

Revision Dates (Preliminary Stage Only)

	INITIAL	DATE
DESIGNED BY	MRM	10-87
CHECKED BY	JLS	3-88
DETAILED BY	DLK	10-87
CHECKED BY		
CHECKED BY		
MRM		10-87

STATE OF COLORADO
STATE DEPARTMENT OF HIGHWAYS
DIVISION OF HIGHWAYS
D. O. H. FORM NO. 117
REV. APR 1986

AS CONSTRUCTED		
NO REVISIONS	REVISED	VOID

FEDERAL ROAD REGION NO.	DIVISION	PROJECT NUMBER	SHEET NUMBER
VIII	COLORADO	IR 25-2(208)	138

REVISIONS		

B-601-1

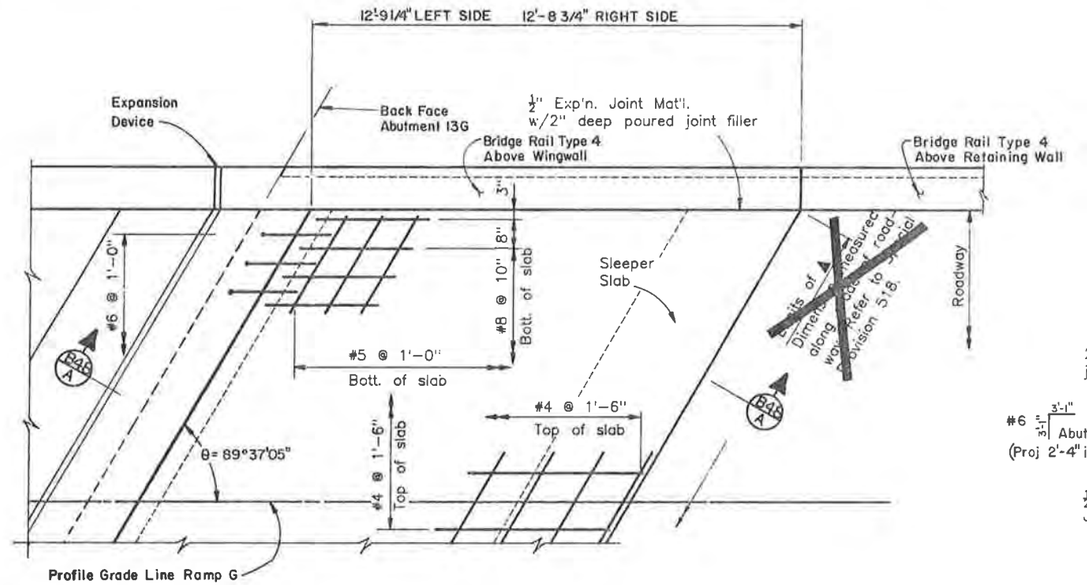

PLAN

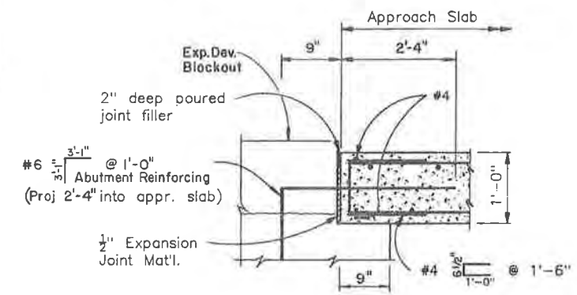

DETAIL "B"

NOTES:

Concrete for approach slab shall be Class D.

1/2" Expansion Joint Material shall meet AASHTO Specification M213.

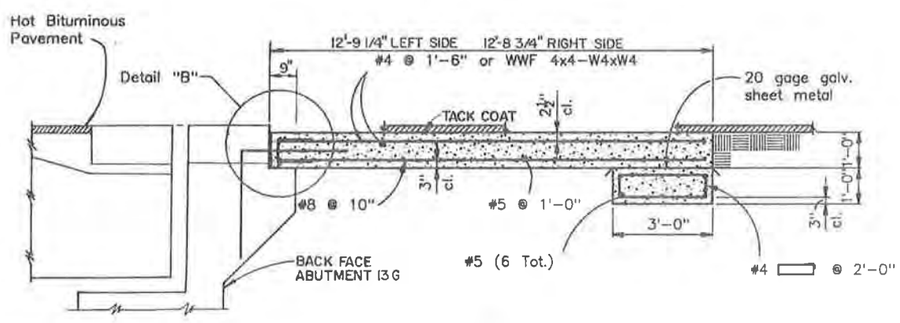

SECTION B-B A

With asphalt roadway

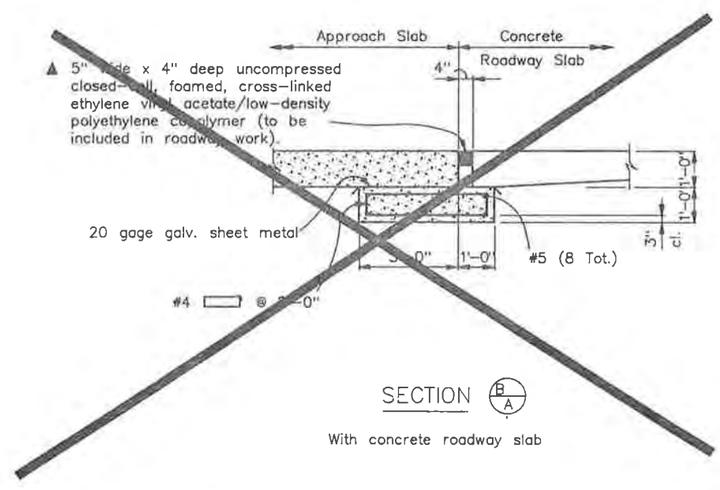

SECTION B A

With concrete roadway slab

Designed By	J.L.S.	10-87	
Checked By	M.R.M.	10-87	
Detailed By	R.H.H.	10-87	

	INITIAL	DATE	Checked By
Designed By	J.L.S.	10-87	
Checked By	M.R.M.	10-87	
Detailed By	R.H.H.	10-87	

08/06/88 DUBO:(EARL.BRUCE)b6011

DIVISION OF HIGHWAYS

APPROACH SLAB DETAILS

Designer	J. STAPLETON	Structure Numbers	F-16-OL
Detailer	R. HINSHAW		
Drawing Number B-48 of 57			Drawings

Revision Dates (Preliminary Stage Only)

STATE OF COLORADO
STATE DEPARTMENT OF HIGHWAYS
DIVISION OF HIGHWAYS
D. O. H. FORM NO. 1171
REV. APR. 1966

AS CONSTRUCTED		
NO REVISIONS	REVISED	VOID

FEDERAL ROAD REGION NO.	DIVISION	PROJECT NUMBER	SHEET NUMBER
VIII	COLORADO	IR 25-2 (208)	139

REVISIONS		

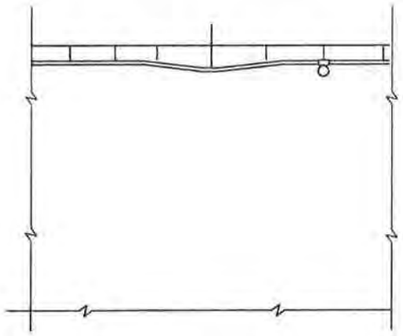

SECTION (B49 A)

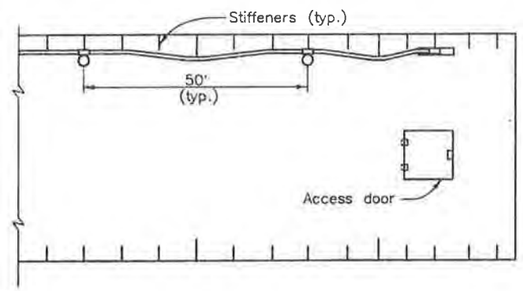

PLAN

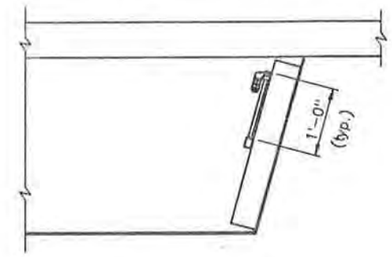

SECTION (B49 B)

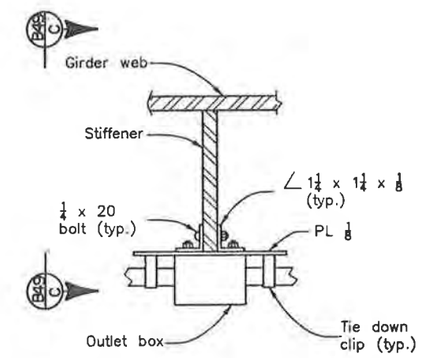

PLAN

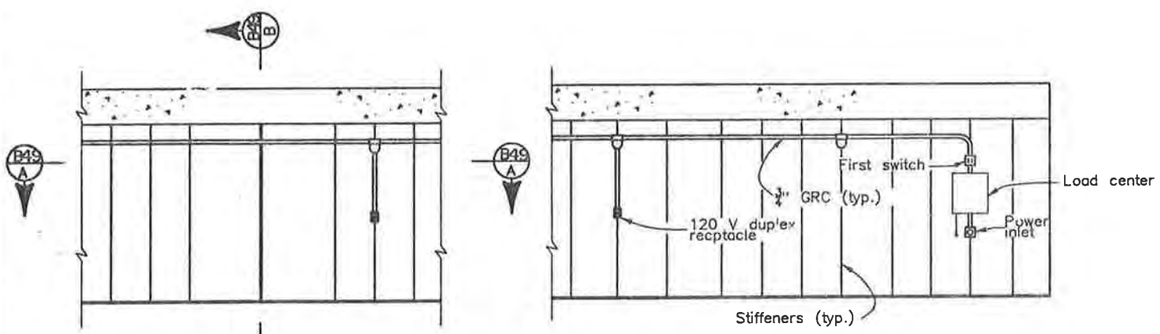

ELEVATION

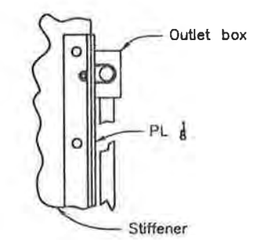

SECTION (B49 C)

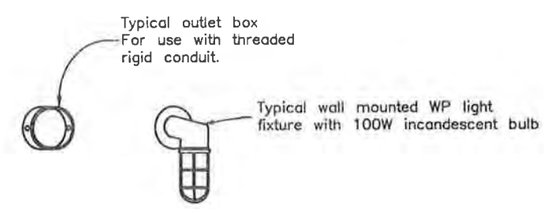

MOUNTING DETAIL

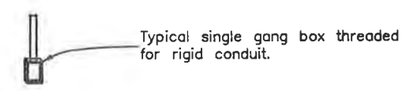

FIXTURE DETAILS

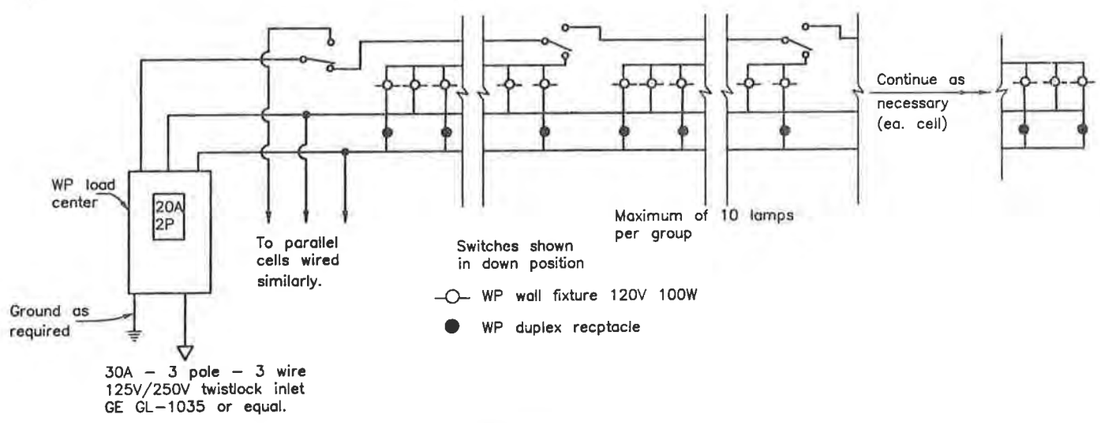

WIRING DIAGRAM

NOTES:
GRC supports shall be spaced at 10' (max.)

	INITIAL	DATE
Designed By	CDOH	10-87
Checked By		
Checked By		
Detailed By	CDOH	10-87

DIVISION OF HIGHWAYS

INTERIOR LIGHTING
(STEEL BOX GIRDER)

Designer	C.D.O.H.	Structure Numbers	F-16-OL
Detailer	C.D.O.H.		
Drawing Number B-49	of 57		Drawings

Revision Dates (Preliminary Stage Only)

11/18/86 DUBO:(KHEATER.PROJ)sleet

STATE OF COLORADO
STATE DEPARTMENT OF HIGHWAYS
DIVISION OF HIGHWAYS
C. H. FORM NO. 117
REV. OCT. 1963

AS CONSTRUCTED			
NO REVISIONS		REVISED		VOID	

FED. ROAD REGION	DIVISION	PROJ. NO.	SHEET NO.	TOTAL SHEETS
VIII	COLO.	IR25-2(208)	140	

REVISIONS		

BRIDGE STANDARD 103

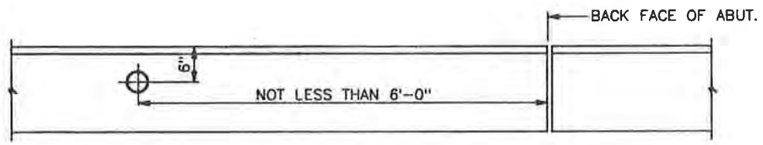

PLAN

Note: Where 1'-3" safety curbs are not used place marker in center of curb.

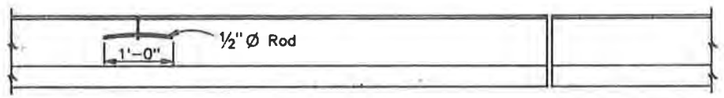

ELEVATION

NOTES:

All work shall be done in accordance with Standard Specifications applicable to the project.

All exposed surfaces of the bronze tablet are to be ground to a smooth surface. All letters are to be depressed a minimum of 1/16 inch. Information on the bronze tablet indicated by pin lines is to be stamped in field by the engineering party after marker is placed. 3/16 inch letters and figures to be used. Project designation on tablet shall be properly shown (i.e.; I for Fed. Aid Interstate, F for Fed. Aid Primary, S for Fed. Aid Secondary, etc. & C for State Projects. See details below).

Bronze Bench Mark Tablets will be furnished by the Division at no expense to the Contractor.

Installation of Bronze Bench Mark Tablets will not be paid for directly, but shall be included in the price bid for Concrete.

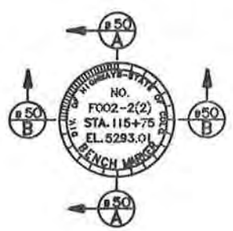

One marker to be placed on Bridges as shown. The station shown on marker shall be the center-line stationing directly opposite the marker.

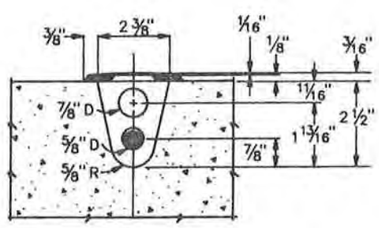

SECTION B50/B

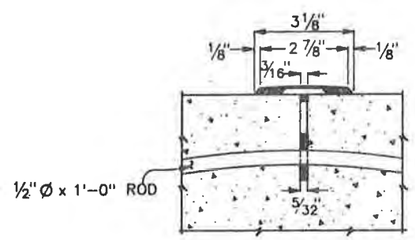

SECTION B50/A

BENCH MARK DETAILS

INITIAL	DATE	CHECKED BY
DESIGNED BY C.D.O.H.	10-87	
CHECKED BY C.D.O.H.	10-87	
DETAILED BY C.D.O.H.	10-87	

DIVISION OF HIGHWAYS			
BENCH MARK			
DESIGNER C.D.O.H.	STRUCTURE NUMBERS	F-16-OL	
DETAILER CADD			
DRAWING NUMBER B-50	OF 57	DRAWINGS	

BRSTD103

REVISION DATES	(PRELIMINARY STAGE ONLY)						
6/85							103

MD NUMBER 06/06/95 19:57:09 _DUA1:[DRAW.STDS.MSTDS] BRSTD103

STATE OF COLORADO
STATE DEPARTMENT OF HIGHWAYS
DIVISION OF HIGHWAYS:
D. O. H. FORM NO. 126:
REV. FEB. 1984

AS CONSTRUCTED			FED. ROAD REGION	DIVISION	PROJ. NO.	SHEET NO.	SHEET TOTALS
NO REVISIONS ☐	REVISED ☐	VOID ☐	VIII	COLO.	IR25-2(208)	141	

BENT LINE DESCRIPTION OR FRACTIONAL POINT DESIGNATION	STATION	OFFSET	ELEVATION		COORDINATES FROM LAYOUT LINE OFFSET X	COORDINATES FROM LAYOUT LINE ORDINATE Y	BENT LINE LENGTH FROM Y-AXIS OR OFFSET FROM EXTERIOR GIRDER	GIRDER LINE LENGTH
LEFT EDGE DECK								
CL PR 3H S	803+18.0000	-10.5000	5246.7289		-190.6493	-328.4548	-354.7059	-390.8024
AH BG 3H S	803+19.7972	-10.5000	5246.8029		-189.1757	-327.5109	-351.9642	-389.0524
F-1	803+24.6898	-10.5000	5247.0046		-185.1856	-324.9077		-384.2882
F-2	803+29.5825	-10.5000	5247.2078		-181.2276	-322.2560		-379.5240
F-3	803+34.4751	-10.5000	5247.4129		-177.3024	-319.5560		-374.7598
F-4	803+39.3677	-10.5000	5247.6197		-173.4105	-316.8082		-369.9955
F-5	803+44.2604	-10.5000	5247.8284		-169.5524	-314.0130		-365.2313
F-6	803+49.1530	-10.5000	5248.0388		-165.7289	-311.1709		-360.4671
F-7	803+54.0457	-10.5000	5248.2501		-161.9404	-308.2822		-355.7029
F-8	803+58.9383	-10.5000	5248.4601		-158.1875	-305.3473		-350.9387
F-9	803+63.8310	-10.5000	5248.6689		-154.4708	-302.3668		-346.1745
F-10	803+68.7236	-10.5000	5248.8764		-150.7908	-299.3410		-341.4103
F-11	803+73.6162	-10.5000	5249.0826		-147.1481	-296.2705		-336.6461
F-12	803+78.5089	-10.5000	5249.2863		-143.5433	-293.1556		-331.8819
F-13	803+83.4015	-10.5000	5249.4870		-139.9768	-289.9969		-327.1177
F-14	803+88.2942	-10.5000	5249.6846		-136.4492	-286.7948		-322.3535
F-15	803+93.1868	-10.5000	5249.8791		-132.9610	-283.5498		-317.5892
F-16	803+98.0794	-10.5000	5250.0705		-129.5128	-280.2623		-312.8250
F-17	804+02.9721	-10.5000	5250.2588		-126.1051	-276.9329		-308.0608
F-18	804+07.8647	-10.5000	5250.4440		-122.7383	-273.5621		-303.2966
F-19	804+12.7574	-10.5000	5250.6262		-119.4131	-270.1504		-298.5324
CL PR 4G	804+17.6500	-10.5000	5250.8053		-116.1298	-266.6983	-159.3423	-293.7682
F-1	804+23.5670	-10.5000	5251.0177		-112.2158	-262.4701		-288.0065
F-2	804+29.4840	-10.5000	5251.2256		-108.3649	-258.1845		-282.2448
F-3	804+35.4010	-10.5000	5251.4290		-104.5777	-253.8424		-276.4832
F-4	804+41.3180	-10.5000	5251.6280		-100.8552	-249.4447		-270.7215
F-5	804+47.2350	-10.5000	5251.8224		-97.1982	-244.9925		-264.9598
F-6	804+53.1520	-10.5000	5252.0122		-93.6074	-240.4867		-259.1981
F-7	804+59.0690	-10.5000	5252.1976		-90.0836	-235.9282		-253.4365
F-8	804+64.9860	-10.5000	5252.3785		-86.6277	-231.3181		-247.6748
F-9	804+70.9030	-10.5000	5252.5548		-83.2403	-226.6574		-241.9131
F-10	804+76.8200	-10.5000	5252.7267		-79.9223	-221.9471		-236.1514
F-11	804+82.7370	-10.5000	5252.8940		-76.6743	-217.1883		-230.3897
F-12	804+88.6540	-10.5000	5253.0568		-73.4970	-212.3019		-224.6281
F-13	804+94.5710	-10.5000	5253.2152		-70.3912	-207.5290		-218.8664
F-14	805+00.4880	-10.5000	5253.3690		-67.3575	-202.6308		-213.1047
F-15	805+06.4050	-10.5000	5253.5183		-64.3966	-197.6882		-207.3430
F-16	805+12.3220	-10.5000	5253.6630		-61.5091	-192.7023		-201.5813
F-17	805+18.2390	-10.5000	5253.8033		-58.6957	-187.6743		-195.8197
F-18	805+24.1560	-10.5000	5253.9391		-55.9570	-182.6052		-190.0580
F-19	805+30.0730	-10.5000	5254.0703		-53.2935	-177.4961		-184.2963
CL PR 5G	805+35.9900	-10.5000	5254.1971		-50.7059	-172.3482	-56.5425	-178.5346
F-1	805+41.9065	-10.5000	5254.3193		-48.1950	-167.1631		-172.7734
F-2	805+47.8230	-10.5000	5254.4370		-45.7610	-161.9413		-167.0122
F-3	805+53.7395	-10.5000	5254.5502		-43.4045	-156.6842		-161.2511
F-4	805+59.6560	-10.5000	5254.6589		-41.1261	-151.3927		-155.4899
F-5	805+65.5725	-10.5000	5254.7631		-38.9261	-146.0682		-149.7287
F-6	805+71.4890	-10.5000	5254.8628		-36.8052	-140.7117		-143.9675
F-7	805+77.4055	-10.5000	5254.9579		-34.7637	-135.3244		-138.2063
F-8	805+83.3220	-10.5000	5255.0486		-32.8021	-129.9075		-132.4451
F-9	805+89.2385	-10.5000	5255.1347		-30.9208	-124.4621		-126.6839
F-10	805+95.1550	-10.5000	5255.2163		-29.1203	-118.9896		-120.9227
F-11	806+01.0715	-10.5000	5255.2935		-27.4009	-113.4910		-115.1615
F-12	806+06.9880	-10.5000	5255.3661		-25.7631	-107.9676		-109.4003
F-13	806+12.9045	-10.5000	5255.4342		-24.2071	-102.4205		-103.6391
F-14	806+18.8210	-10.5000	5255.4978		-22.7333	-96.8511		-97.8779
F-15	806+24.7375	-10.5000	5255.5569		-21.3421	-91.2604		-92.1168
F-16	806+30.6540	-10.5000	5255.6114		-20.0337	-85.6498		-86.3556
F-17	806+36.5705	-10.5000	5255.6615		-18.8085	-80.0205		-80.5944
F-18	806+42.4870	-10.5000	5255.7071		-17.6666	-74.3736		-74.8332
F-19	806+48.4035	-10.5000	5255.7481		-16.6084	-68.7105		-69.0720
CL PR 6G	806+54.3200	-10.5000	5255.7846		-15.6341	-63.0324	-15.8429	-63.3108
F-1	806+59.7021	-10.5000	5255.8144		-14.8092	-57.7781		-57.9921
F-2	806+65.2442	-10.5000	5255.8403		-14.0562	-52.5130		-52.6734
F-3	806+70.7062	-10.5000	5255.8623		-13.3751	-47.2381		-47.3547
F-4	806+76.1683	-10.5000	5255.8805		-12.7661	-41.9544		-42.0360
F-5	806+81.6304	-10.5000	5255.8948		-12.2293	-36.6629		-36.7173
F-6	806+87.0925	-10.5000	5255.9054		-11.7649	-31.3646		-31.3986
F-7	806+92.5546	-10.5000	5255.9120		-11.3728	-26.0604		-26.0799
F-8	806+98.0166	-10.5000	5255.9150		-11.0532	-20.7514		-20.7612
F-9	807+03.4787	-10.5000	5255.9146		-10.8061	-15.4385		-15.4425
F-10	807+08.9408	-10.5000	5255.9110		-10.6316	-10.1227		-10.1238
F-11	807+14.4029	-10.5000	5255.9041		-10.5296	-4.8050		-4.8051
P.C.C.	807+19.3375	-10.5000	5255.8950		-10.5000	0.0000	-10.5000	0.0000
WEB 1								
CL PR 3H S	803+18.0000	-5.5000	5247.0500		-187.9619	-332.6712	-349.7059	-395.8191
AH BG 3H S	803+19.7744	-5.5000	5247.1264		-186.4883	-331.7273	-346.9641	-394.0691
F-1	803+24.6682	-5.5000	5247.3369		-182.4458	-329.0903		-389.2426
F-2	803+29.5620	-5.5000	5247.5482		-178.4360	-326.4041		-384.4161
F-3	803+34.4557	-5.5000	5247.7605		-174.4593	-323.6691		-379.5896
F-4	803+39.3495	-5.5000	5247.9737		-170.5164	-320.8855		-374.7631
F-5	803+44.2433	-5.5000	5248.1879		-166.6078	-318.0540		-369.9367
F-6	803+49.1371	-5.5000	5248.4031		-162.7341	-315.1748		-365.1102
F-7	803+54.0309	-5.5000	5248.6181		-158.8960	-312.2485		-360.2837
F-8	803+58.9246	-5.5000	5248.8311		-155.0939	-309.2754		-355.4572
F-9	803+63.8184	-5.5000	5249.0419		-151.3285	-306.2561		-350.6307
F-10	803+68.7122	-5.5000	5249.2506		-147.6004	-303.1909		-345.8042
F-11	803+73.6060	-5.5000	5249.4572		-143.9100	-300.0803		-340.9777
F-12	803+78.4998	-5.5000	5249.6610		-140.2579	-296.9248		-336.1512
F-13	803+83.3935	-5.5000	5249.8617		-136.6447	-293.7248		-331.3247
F-14	803+88.2873	-5.5000	5250.0593		-133.0710	-290.4809		-326.4982
F-15	803+93.1811	-5.5000	5250.2538		-129.5372	-287.1935		-321.6717
F-16	803+98.0749	-5.5000	5250.4453		-126.0438	-283.8632		-316.8453
F-17	804+02.9687	-5.5000	5250.6337		-122.5915	-280.4903		-312.0188
F-18	804+07.8624	-5.5000	5250.8189		-119.1807	-277.0754		-307.1923
F-19	804+12.7562	-5.5000	5251.0011		-115.8120	-273.6191		-302.3658
CL PR 4G	804+17.6500	-5.5000	5251.1803		-112.4857	-270.1219	-154.3423	-297.5393
F-1	804+23.5670	-5.5000	5251.3927		-108.5216	-265.8394		-291.7037
F-2	804+29.4840	-5.5000	5251.6006		-104.6212	-261.4988		-285.8680
F-3	804+35.4010	-5.5000	5251.8040		-100.7854	-257.1009		-280.0324
F-4	804+41.3180	-5.5000	5252.0030		-97.0151	-252.6468		-274.1967
F-5	804+47.2350	-5.5000	5252.1974		-93.3111	-248.1375		-268.3611
F-6	804+53.1520	-5.5000	5252.3872		-89.6742	-243.5738		-262.5254
F-7	804+59.0690	-5.5000	5252.5726		-86.1053	-238.9568		-256.6898
F-8	804+64.9860	-5.5000	5252.7535		-82.6050	-234.2075		-250.8542
F-9	804+70.9030	-5.5000	5252.9298		-79.1741	-229.5670		-245.0185
F-10	804+76.8200	-5.5000	5253.1017		-75.8135	-224.7962		-239.1829
F-11	804+82.7370	-5.5000	5253.2690		-72.5238	-219.9763		-233.3472
F-12	804+88.6540	-5.5000	5253.4318		-69.3057	-215.1082		-227.5116
F-13	804+94.5710	-5.5000	5253.5902		-66.1600	-210.1931		-221.6760
F-14	805+00.4880	-5.5000	5253.7440		-63.0874	-205.2319		-215.8403
F-15	805+06.4050	-5.5000	5253.8933		-60.0884	-200.2259		-210.0047
F-16	805+12.3220	-5.5000	5254.0380		-57.1639	-195.1760		-204.1690
F-17	805+18.2390	-5.5000	5254.1783		-54.3144	-190.0834		-198.3334
F-18	805+24.1560	-5.5000	5254.3141		-51.5405	-184.9493		-192.4978
F-19	805+30.0730	-5.5000	5254.4453		-48.8429	-179.7746		-186.6621
CL PR 5G	805+35.9900	-5.5000	5254.5721		-46.2221	-174.5607	-51.5425	-180.8265
F-1	805+41.9065	-5.5000	5254.6943		-43.6789	-169.3089		-174.9913
F-2	805+47.8230	-5.5000	5254.8120		-41.2137	-164.0202		-169.1562
F-3	805+53.7395	-5.5000	5254.9252		-38.8269	-158.6955		-163.3210
F-4	805+59.6560	-5.5000	5255.0339		-36.5192	-153.3362		-157.4859
F-5	805+65.5725	-5.5000	5255.1381		-34.2910	-147.9433		-151.6507
F-6	805+71.4890	-5.5000	5255.2378		-32.1428	-142.5180		-145.8156
F-7	805+77.4055	-5.5000	5255.3329		-30.0751	-137.0615		-139.9804
F-8	805+83.3220	-5.5000	5255.4236		-28.0884	-131.5751		-134.1453
F-9	805+89.2385	-5.5000	5255.5097		-26.1830	-126.0598		-128.3101
F-10	805+95.1550	-5.5000	5255.5913		-24.3593	-120.5170		-122.4750
F-11	806+01.0715	-5.5000	5255.6685		-22.6179	-114.9479		-116.6398
F-12	806+06.9880	-5.5000	5255.7411		-20.9590	-109.3535		-110.8047
F-13	806+12.9045	-5.5000	5255.8092		-19.3831	-103.7353		-104.9695
F-14	806+18.8210	-5.5000	5255.8728		-17.8904	-98.0943		-99.1344
F-15	806+24.7375	-5.5000	5255.9319		-16.4813	-92.4319		-93.2993
F-16	806+30.6540	-5.5000	5255.9864		-15.1561	-86.7493		-87.4641
F-17	806+36.5705	-5.5000	5256.0365		-13.9161	-81.0477		-81.6290
F-18	806+42.4870	-5.5000	5256.0821		-12.7586	-75.3284		-75.7938
F-19	806+48.4035	-5.5000	5256.1231		-11.6868	-69.5926		-69.9587
CL PR 6G	806+54.3200	-5.5000	5256.1596		-10.7000	-63.8418	-10.8429	-64.1235
F-1	806+59.9507	-5.5000	5256.1902		-9.8399	-58.3553		-58.5702
F-2	806+65.5814	-5.5000	5256.2167		-9.0571	-52.8575		-53.0169
F-3	806+71.2121	-5.5000	5256.2391		-8.3518	-47.3492		-47.4637
F-4	806+76.8428	-5.5000	5256.2575		-7.7241	-41.8316		-41.9104
F-5	806+82.4735	-5.5000	5256.2717		-7.1741	-36.3056		-36.3571
F-6	806+88.1042	-5.5000	5256.2819		-6.7020	-30.7725		-30.8038
F-7	806+93.7350	-5.5000	5256.2880		-6.3078	-25.2333		-25.2505
F-8	806+99.3657	-5.5000	5256.2901		-5.9918	-19.6890		-19.6972
F-9	807+04.9964	-5.5000	5256.2884		-5.7535	-14.1409		-14.1439
F-10	807+10.6271	-5.5000	5256.2830		-5.5936	-8.5900		-8.5907
F-11	807+16.2578	-5.5000	5256.2738		-5.5117	-3.0373		-3.0374
P.C.C.	807+19.3375	-5.5000	5256.2672		-5.5000	0.0000	-5.5000	0.0000
PROFILE GRADE LINE								
CL PR 3H S	803+18.0000	0.0000	5247.4033		-185.0057	-337.3092	-344.2059	-401.3375
AH BG 3H S	803+19.7500	0.0000	5247.4821		-183.5321	-336.3654	-341.4641	-399.5875
F-1	803+24.6450	0.0000	5247.7023		-179.4321	-333.6912		-394.6925
F-2	803+29.5400	0.0000	5247.9226		-175.3652	-330.9671		-389.7975
F-3	803+34.4350	0.0000	5248.1429		-171.3319	-328.1934		-384.9025
F-4	803+39.3300	0.0000	5248.3632		-167.3328	-325.3706		-380.0075
F-5	803+44.2250	0.0000	5248.5834		-163.3686	-322.4990		-375.1125
F-6	803+49.1200	0.0000	5248.8037		-159.4399	-319.5792		-370.2175
F-7	803+54.0150	0.0000	5249.0229		-155.5471	-316.6115		-365.3225
F-8	803+58.9100	0.0000	5249.2391		-151.6910	-313.5963		-360.4275
F-9	803+63.8050	0.0000	5249.4522		-147.8721	-310.5342		-355.5325
F-10	803+68.7000	0.0000	5249.6623		-144.0909	-307.4257		-350.6375
F-11	803+73.5950	0.0000	5249.8692		-140.3480	-304.2710		-345.7425
F-12	803+78.4900	0.0000	5250.0731		-136.6440	-301.0708		-340.8475
F-13	803+83.3850	0.0000	5250.2738		-132.9795	-297.8256		-335.9525
F-14	803+88.2800	0.0000	5250.4715		-129.3549	-294.5357		-331.0575
F-15	803+93.1750	0.0000	5250.6661		-125.7709	-291.2017		-326.1625
F-16	803+98.0700	0.0000	5250.8576		-122.2279	-287.8241		-321.2675
F-17	804+02.9650	0.0000	5251.0460		-118.7266	-284.4034		-316.3725
F-18	804+07.8600	0.0000	5251.2314		-115.2673	-280.9401		-311.4775
F-19	804+12.7550	0.0000	5251.4136		-111.8507	-277.4347		-306.5825
CL PR 4G	804+17.6500	0.0000	5251.5928		-108.4773	-273.8878	-148.8423	-301.6875
F-1	804+23.5670	0.0000	5251.8052		-104.4579	-269.5457		-295.7705
F-2	804+29.4840	0.0000	5252.0131		-100.5031	-265.1445		-289.8535
F-3	804+35.4010	0.0000	5252.2165		-96.6138	-260.6854		-283.9365
F-4	804+41.3180	0.0000	5252.4155		-92.7910	-256.1692		-278.0195
F-5	804+47.2350	0.0000	5252.6099		-89.0354	-251.5969		-272.1025
F-6	804+53.1520	0.0000	5252.7997		-85.3478	-246.9696		-266.1855
F-7	804+59.0690	0.0000	5252.9851		-81.7290	-242.2883		-260.2685
F-8	804+64.9860	0.0000	5253.1660		-78.1799	-237.5539		-254.3515
F-9	804+70.9030	0.0000	5253.3423		-74.7013	-232.7676		-248.4345
F-10	804+76.8200	0.0000	5253.5142		-71.2938	-227.9303		-242.5175
F-11	804+82.7370	0.0000	5253.6815		-67.9582	-223.0431		-236.6005
F-12	804+88.6540	0.0000	5253.8443		-64.6953	-218.1072		-230.6835
F-13	804+94.5710	0.0000	5254.0027		-61.5057	-213.1235		-224.7665
F-14	805+00.4880	0.0000	5254.1565		-58.3902	-208.0932		-218.8495
F-15	805+06.4050	0.0000	5254.3058		-55.3495	-203.0174		-212.9325
F-16	805+12.3220	0.0000	5254.4505		-52.3842	-197.8971		-207.0155
F-17	805+18.2390	0.0000	5254.5908		-49.4949	-192.7335		-201.0985
F-18	805+24.1560	0.0000	5254.7266		-46.6824	-187.5278		-195.1815
F-19	805+30.0730	0.0000	5254.8578		-43.9471	-182.2810		-189.2645
CL PR 5G	805+35.9900	0.0000	5254.9846		-41.2898	-176.9943	-46.0425	-183.3475
F-1	805+41.9065	0.0000	5255.1068		-38.7112	-171.6694		-177.4310
F-2	805+47.8230	0.0000	5255.2245		-36.2116	-166.3069		-171.5145
F-3	805+53.7395	0.0000	5255.3377		-33.7916	-160.9080		-165.5980
F-4	805+59.6560	0.0000	5255.4464		-31.4517	-155.4739		-159.6815
F-5	805+65.5725	0.0000	5255.5506		-29.1924	-150.0058		-153.7650
F-6	805+71.4890	0.0000	5255.6503		-27.0143	-144.5049		-147.8485
F-7	805+77.4055	0.0000	5255.7454		-24.9178	-138.9724		-141.9320
F-8	805+83.3220	0.0000	5255.8361		-22.9033	-133.4095		-136.0155
F-9	805+89.2385	0.0000	5255.9222		-20.9713	-127.8173		-130.0990
F-10	805+95.1550	0.0000	5256.0038		-19.1223	-122.1972		-124.1825
F-11	806+01.0715	0.0000	5256.0810		-17.3566	-116.5504		-118.2660
F-12	806+06.9880	0.0000	5256.1536		-15.6745	-110.8781		-112.3495
F-13	806+12.9045	0.0000	5256.2217		-14.0766	-105.1815		-106.4330
F-14	806+18.8210	0.0000	5256.2853		-12.5631	-99.4619		-100.5165
F-15	806+24.7375	0.0000	5256.3444		-11.1344	-93.7206		-94.6000
F-16	806+30.6540	0.0000	5256.3989		-9.7907	-87.9587		-88.6835
F-17	806+36.5705	0.0000	5256.4490		-8.5325	-82.1777		-82.7670

BENT LINE DESCRIPTION OR FRACTIONAL POINT DESIGNATION	STATION	OFFSET	ELEVATION		COORDINATES FROM LAYOUT LINE X	COORDINATES FROM LAYOUT LINE ORDINATE Y	BENT LINE LENGTH FROM Y-AXIS OR OFFSET FROM EXTERIOR GIRDER	GIRDER LINE LENGTH

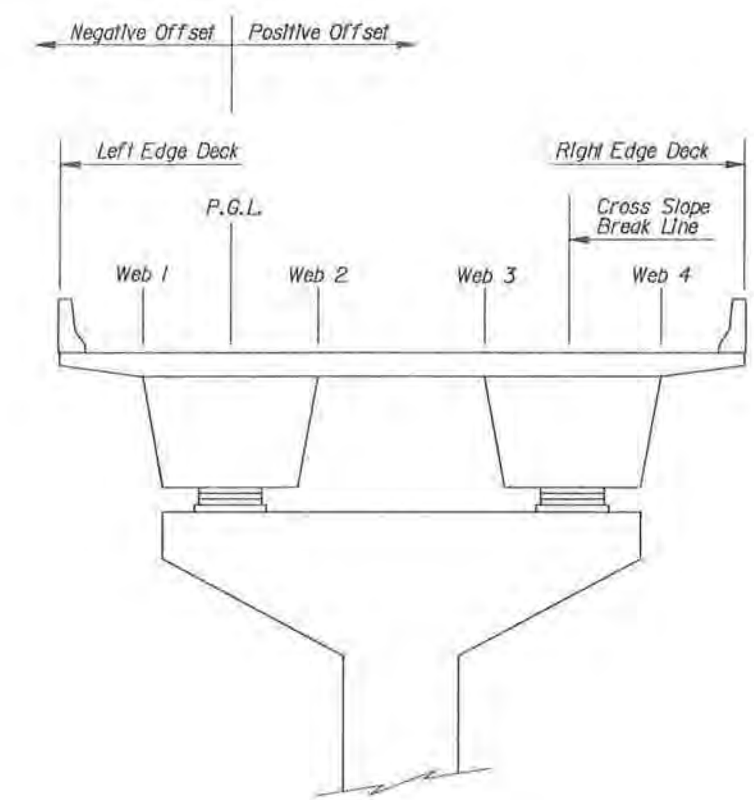

NOTES:

Elevations are at top of Concrete Deck 0.1667 feet below finished grade.

Coordinates and girder line lengths are with respect to Ahead Tangent Curve G-1.

Bridge deck elevations, coordinates and lengths are for placing and construction of concrete deck only.

This information shall not be used for fabrication of steel box girders.

Refer to Framing Plans for Steel Fabrication Dimensions.

REVISIONS

DeLeuw, Cather & Company Denver, CO.

DIVISION OF HIGHWAYS

BRIDGE DECK ELEVATIONS

Designer	J. Stapleton	Structure Numbers	F-16-OL
Detailer	S. Shibao		

Drawing Number B-51 of 57 Drawings

Revision Dates (Preliminary Stage Only)

	INITIAL	DATE
DESIGNED BY / CHECKED BY	J.L.S.	5-88
CHECKED BY / QUANTITIES BY	B.A.A.	5-88
DETAILED BY / CHECKED BY	S.S.	5-88

UD1:[100,3]208DECK.DGN;1
UDA1:[PLOTS]208.PRF
DATE 9-MAY-1988 - TIME 15:27

STATE OF COLORADO
STATE DEPARTMENT OF HIGHWAYS
DIVISION OF HIGHWAYS:
D. O. H. FORM NO. 126:
REV. FEB. 1984

AS CONSTRUCTED			FED. ROAD REGION	DIVISION	PROJ. NO.	SHEET NO.	SHEET TOTALS
NO REVISIONS ☐	REVISED ☐	VOID ☐	VIII	COLO.	IR25-2(208)	142	

BENT LINE DESCRIPTION OR FRACTIONAL POINT DESIGNATION	STATION	OFFSET	ELEVATION		COORDINATES FROM LAYOUT LINE OFFSET X	COORDINATES FROM LAYOUT LINE ORDINATE Y	BENT LINE LENGTH FROM Y-AXIS OR OFFSET FROM EXTERIOR GIRDER	GIRDER LINE LENGTH
F-18	806+42.4870	0.0000	5256.4946		-7.3598	-76.3786		-76.8505
F-19	806+48.4035	0.0000	5256.5356		-6.2731	-70.5628		-70.9340
CL PR 6G	806+54.3200	0.0000	5256.5721		-5.2725	-64.7316	-5.3429	-65.0175
F-1	806+60.1305	0.0000	5256.6036		-4.3738	-58.9910		-59.2070
F-2	806+65.9410	0.0000	5256.6308		-3.5587	-53.2380		-53.3965
F-3	806+71.7516	0.0000	5256.6536		-2.8272	-47.4738		-47.5859
F-4	806+77.5621	0.0000	5256.6720		-2.1795	-41.6995		-41.7754
F-5	806+83.3726	0.0000	5256.6861		-1.6158	-35.9165		-35.9649
F-6	806+89.1831	0.0000	5256.6959		-1.1361	-30.1258		-30.1544
F-7	806+94.9936	0.0000	5256.7013		-.7405	-24.3288		-24.3439
F-8	807+00.8042	0.0000	5256.7023		-.4293	-18.5267		-18.5333
F-9	807+06.6147	0.0000	5256.6990		-.2023	-12.7207		-12.7228
F-10	807+12.4252	0.0000	5256.6913		-.0597	-6.9120		-6.9123
F-11	807+18.2357	0.0000	5256.6793		-.0015	-1.1018		-1.1018
P.C.C.	807+19.3375	0.0000	5256.6766		0.0000	0.0000	.0000	0.0000

WEB 2

BENT LINE DESCRIPTION OR FRACTIONAL POINT DESIGNATION	STATION	OFFSET	ELEVATION		OFFSET X	ORDINATE Y	BENT LINE LENGTH FROM Y-AXIS OR OFFSET FROM EXTERIOR GIRDER	GIRDER LINE LENGTH
CL PR 3H S	803+18.0000	2.9825	5247.5949		-183.4027	-339.8243	-341.2233	-404.3239
AH BG 3H S	803+19.7371	2.9822	5247.6749		-181.9292	-338.8802	-338.4819	-402.5740
F-1	803+24.6327	2.9812	5247.9004		-177.7985	-336.1850		-397.6419
F-2	803+29.5283	2.9803	5248.1254		-173.7012	-333.4396		-392.7098
F-3	803+34.4240	2.9794	5248.3500		-169.6377	-330.6443		-387.7777
F-4	803+39.3196	2.9787	5248.5740		-165.6087	-327.7996		-382.8456
F-5	803+44.2153	2.9780	5248.7976		-161.6148	-324.9058		-377.9136
F-6	803+49.1109	2.9775	5249.0206		-157.6565	-321.9635		-372.9815
F-7	803+54.0066	2.9770	5249.2421		-153.7345	-318.9730		-368.0494
F-8	803+58.9022	2.9766	5249.4600		-149.8493	-315.9348		-363.1173
F-9	803+63.7979	2.9764	5249.6743		-146.0016	-312.8494		-358.1853
F-10	803+68.6935	2.9762	5249.8850		-142.1918	-309.7173		-353.2532
F-11	803+73.5892	2.9762	5250.0922		-138.4205	-306.5388		-348.3211
F-12	803+78.4848	2.9762	5250.2961		-134.6884	-303.3144		-343.3890
F-13	803+83.3805	2.9762	5250.4969		-130.9961	-300.0446		-338.4570
F-14	803+88.2761	2.9762	5250.6946		-127.3441	-296.7298		-333.5249
F-15	803+93.1718	2.9762	5250.8892		-123.7329	-293.3706		-328.5928
F-16	803+98.0674	2.9762	5251.0807		-120.1631	-289.9674		-323.6607
F-17	804+02.9631	2.9762	5251.2692		-116.6352	-286.5209		-318.7287
F-18	804+07.8587	2.9762	5251.4545		-113.1497	-283.0313		-313.7966
F-19	804+12.7544	2.9762	5251.6368		-109.7072	-279.4994		-308.8645
CL PR 4G	804+17.6500	2.9762	5251.8160		-106.3082	-275.9257	-145.8661	-303.9324
F-1	804+23.5670	2.9762	5252.0284		-102.2589	-271.5512		-297.9714
F-2	804+29.4840	2.9762	5252.2363		-98.2747	-267.1173		-292.0104
F-3	804+35.4010	2.9762	5252.4398		-94.3565	-262.6250		-286.0493
F-4	804+41.3180	2.9762	5252.6387		-90.5052	-258.0752		-280.0883
F-5	804+47.2350	2.9762	5252.8331		-86.7216	-253.4689		-274.1273
F-6	804+53.1520	2.9762	5253.0230		-83.0066	-248.8072		-268.1662
F-7	804+59.0690	2.9762	5253.2083		-79.3609	-244.0910		-262.2052
F-8	804+64.9860	2.9762	5253.3892		-75.7854	-239.3214		-256.2442
F-9	804+70.9030	2.9762	5253.5656		-72.2809	-234.4995		-250.2832
F-10	804+76.8200	2.9762	5253.7374		-68.8480	-229.6262		-244.3221
F-11	804+82.7370	2.9762	5253.9047		-65.4876	-224.7027		-238.3611
F-12	804+88.6540	2.9762	5254.0676		-62.2004	-219.7300		-232.4001
F-13	804+94.5710	2.9762	5254.2259		-58.9872	-214.7093		-226.4390
F-14	805+00.4880	2.9762	5254.3797		-55.8485	-209.6415		-220.4780
F-15	805+06.4050	2.9762	5254.5290		-52.7851	-204.5279		-214.5170
F-16	805+12.3220	2.9762	5254.6738		-49.7978	-199.3695		-208.5559
F-17	805+18.2390	2.9762	5254.8140		-46.8870	-194.1676		-202.5949
F-18	805+24.1560	2.9762	5254.9498		-44.0535	-188.9231		-196.6339
F-19	805+30.0730	2.9762	5255.0810		-41.2979	-183.6373		-190.6729
CL PR 5G	805+35.9900	2.9762	5255.2078		-38.6208	-178.3113	-43.0663	-184.7118
F-1	805+41.9065	2.9762	5255.3300		-36.0230	-172.9467		-178.7513
F-2	805+47.8230	2.9762	5255.4477		-33.5048	-167.5443		-172.7908
F-3	805+53.7395	2.9762	5255.5609		-31.0668	-162.1053		-166.8302
F-4	805+59.6560	2.9762	5255.6696		-28.7095	-156.6307		-160.8697
F-5	805+65.5725	2.9762	5255.7738		-26.4334	-151.1219		-154.9092
F-6	805+71.4890	2.9762	5255.8735		-24.2391	-145.5801		-148.9487
F-7	805+77.4055	2.9762	5255.9686		-22.1270	-140.0064		-142.9881
F-8	805+83.3220	2.9762	5256.0593		-20.0975	-134.4021		-137.0276
F-9	805+89.2385	2.9762	5256.1454		-18.1512	-128.7684		-131.0671
F-10	805+95.1550	2.9762	5256.2271		-16.2884	-123.1065		-125.1066
F-11	806+01.0715	2.9762	5256.3042		-14.5095	-117.4176		-119.1460
F-12	806+06.9880	2.9762	5256.3768		-12.8150	-111.7031		-113.1855
F-13	806+12.9045	2.9762	5256.4449		-11.2052	-105.9641		-107.2250
F-14	806+18.8210	2.9762	5256.5085		-9.6804	-100.2020		-101.2645
F-15	806+24.7375	2.9762	5256.5676		-8.2411	-94.4179		-95.3039
F-16	806+30.6540	2.9762	5256.6222		-6.8874	-88.6132		-89.3434
F-17	806+36.5705	2.9762	5256.6722		-5.6197	-82.7891		-83.3829
F-18	806+42.4870	2.9762	5256.7178		-4.4384	-76.9469		-77.4224
F-19	806+48.4035	2.9762	5256.7588		-3.3435	-71.0878		-71.4618
CL PR 6G	806+54.3200	2.9762	5256.7954		-2.3355	-65.2132	-2.3667	-65.5013
F-1	806+60.2256	2.9762	5256.8273		-1.4161	-59.3352		-59.5518
F-2	806+66.1311	2.9762	5256.8548		-.5835	-53.4444		-53.6023
F-3	806+72.0367	2.9762	5256.8778		.1620	-47.5418		-47.6528
F-4	806+77.9422	2.9762	5256.8963		.8202	-41.6289		-41.7033
F-5	806+83.8478	2.9762	5256.9103		1.3911	-35.7069		-35.7538
F-6	806+89.7533	2.9762	5256.9198		1.8745	-29.7771		-29.8043
F-7	806+95.6589	2.9762	5256.9248		2.2703	-23.8409		-23.8548
F-8	807+01.5644	2.9762	5256.9252		2.5785	-17.8994		-17.9053
F-9	807+07.4700	2.9763	5256.9209		2.7989	-11.9541		-11.9558
F-10	807+13.3755	2.9764	5256.9119		2.9316	-6.0061		-6.0064
F-11	807+19.2811	2.9765	5256.8983		2.9765	-.0569		-.0569
P.C.C.	807+19.3375	2.9765	5256.8981		2.9765	0.0000	2.9765	0.0000

WEB 3

BENT LINE DESCRIPTION OR FRACTIONAL POINT DESIGNATION	STATION	OFFSET	ELEVATION		OFFSET X	ORDINATE Y	BENT LINE LENGTH FROM Y-AXIS OR OFFSET FROM EXTERIOR GIRDER	GIRDER LINE LENGTH
CL PR 3H S	803+18.0000	14.1282	5248.2448		-177.4120	-349.2231	-330.0777	-412.1956
AH BG 3H S	803+19.6906	14.0630	5248.3568		-175.9733	-348.2244	-327.4010	-410.4442
F-1	803+24.5705	13.8918	5248.5825		-171.8362	-345.3226		-405.3908
F-2	803+29.4524	13.7184	5248.8273		-167.7360	-342.3688		-400.3375
F-3	803+34.3365	13.5486	5249.0664		-163.6701	-339.3680		-395.2841
F-4	803+39.2227	13.3826	5249.3001		-159.6388	-336.3208		-390.2308
F-5	803+44.1109	13.2203	5249.5284		-155.6428	-333.2275		-385.1774
F-6	803+49.0012	13.0617	5249.7513		-151.6826	-330.0886		-380.1241
F-7	803+53.8934	12.9070	5249.9690		-147.7586	-326.9044		-375.0707
F-8	803+58.7875	12.7561	5250.1815		-143.8715	-323.6754		-370.0173
F-9	803+63.6836	12.6090	5250.3890		-140.0216	-320.4020		-364.9640
F-10	803+68.5814	12.4658	5250.5914		-136.2096	-317.0846		-359.9106
F-11	803+73.4810	12.3265	5250.7890		-132.4359	-313.7237		-354.8573
F-12	803+78.3824	12.1911	5250.9830		-128.7010	-310.3197		-349.8039
F-13	803+83.2855	12.0596	5251.1743		-125.0054	-306.8731		-344.7506
F-14	803+88.1902	11.9321	5251.3629		-121.3497	-303.3843		-339.6972
F-15	803+93.0964	11.8085	5251.5487		-117.7342	-299.8537		-334.6438
F-16	803+98.0043	11.6890	5251.7318		-114.1594	-296.2819		-329.5905
F-17	804+02.9136	11.5734	5251.9121		-110.6259	-292.6694		-324.5371
F-18	804+07.8243	11.4619	5252.0897		-107.1341	-289.0164		-319.4838
F-19	804+12.7365	11.3545	5252.2645		-103.6845	-285.3237		-314.4304
CL PR 4G	804+17.6500	11.2511	5252.4366		-100.2774	-281.5916	-137.5912	-309.3771
F-1	804+23.5554	11.1323	5252.6397		-96.2408	-277.0561		-303.3053
F-2	804+29.4625	11.0194	5252.8389		-92.2670	-272.4653		-297.2335
F-3	804+35.3713	10.9124	5253.0340		-88.3570	-267.8202		-291.1618
F-4	804+41.2818	10.8115	5253.2251		-84.5114	-263.1216		-285.0900
F-5	804+47.1937	10.7165	5253.4123		-80.7309	-258.3705		-279.0183
F-6	804+53.1070	10.6276	5253.5954		-77.0163	-253.5676		-272.9465
F-7	804+59.0217	10.5447	5253.7745		-73.3683	-248.7140		-266.8748
F-8	804+64.9376	10.4678	5253.9495		-69.7875	-243.8105		-260.8030
F-9	804+70.8546	10.3971	5254.1207		-66.2747	-238.8582		-254.7313
F-10	804+76.7727	10.3324	5254.2878		-63.8306	-233.8578		-248.6595
F-11	804+82.6917	10.2739	5254.4508		-59.4557	-228.8105		-242.5878
F-12	804+88.6116	10.2215	5254.6098		-56.1507	-223.7171		-236.5160
F-13	804+94.5322	10.1752	5254.7648		-52.9163	-218.5786		-230.4443
F-14	805+00.4535	10.1350	5254.9157		-49.7531	-213.3959		-224.3725
F-15	805+06.3754	10.1011	5255.0626		-46.6616	-208.1702		-218.3008
F-16	805+12.2977	10.0733	5255.2055		-43.6424	-202.9023		-212.2290
F-17	805+18.2205	10.0516	5255.3443		-40.6962	-197.5933		-206.1573
F-18	805+24.1435	10.0362	5255.4790		-37.8235	-192.2442		-200.0855
F-19	805+30.0667	10.0269	5255.6097		-35.0248	-186.8560		-194.0138
CL PR 5G	805+35.9900	10.0238	5255.7364		-32.3007	-181.4297	-36.0187	-187.9420
F-1	805+41.9065	10.0238	5255.8586		-29.6574	-175.9713		-181.8772
F-2	805+47.8230	10.0238	5255.9763		-27.0952	-170.4745		-175.8124
F-3	805+53.7395	10.0238	5256.0895		-24.6146	-164.9403		-169.7477
F-4	805+59.6560	10.0238	5256.1982		-22.2160	-159.3700		-163.6829
F-5	805+65.5725	10.0238	5256.3024		-19.9002	-153.7649		-157.6182
F-6	805+71.4890	10.0238	5256.4020		-17.6675	-148.1261		-151.5534
F-7	805+77.4055	10.0238	5256.4972		-15.5184	-142.4550		-145.4886
F-8	805+83.3220	10.0238	5256.5879		-13.4534	-136.7526		-139.4239
F-9	805+89.2385	10.0238	5256.6740		-11.4730	-131.0204		-133.3591
F-10	805+95.1550	10.0238	5256.7556		-9.5777	-125.2594		-127.2944
F-11	806+01.0715	10.0238	5256.8328		-7.7677	-119.4711		-121.2296
F-12	806+06.9880	10.0238	5256.9054		-6.0435	-113.6567		-115.1648
F-13	806+12.9045	10.0238	5256.9735		-4.4056	-107.8173		-109.1001
F-14	806+18.8210	10.0238	5257.0371		-2.8542	-101.9544		-103.0353
F-15	806+24.7375	10.0238	5257.0962		-1.3896	-96.0692		-96.9706
F-16	806+30.6540	10.0238	5257.1507		-.0123	-90.1630		-90.9058
F-17	806+36.5705	10.0238	5257.2008		1.2775	-84.2370		-84.8410
F-18	806+42.4870	10.0238	5257.2464		2.4796	-78.2926		-78.7763
F-19	806+48.4035	10.0238	5257.2874		3.5935	-72.3311		-72.7115
CL PR 6G	806+54.3200	10.0238	5257.3239		4.6192	-66.3537	4.6809	-66.6468
F-1	806+60.4437	10.0238	5257.3570		5.5876	-60.1518		-60.3696
F-2	806+66.5673	10.0238	5257.3852		6.4609	-53.9358		-54.0925
F-3	806+72.6910	10.0238	5257.4086		7.2389	-47.7071		-47.8154
F-4	806+78.8147	10.0238	5257.4272		7.9215	-41.4673		-41.5383
F-5	806+84.9384	10.0238	5257.4410		8.5086	-35.2177		-35.2611
F-6	806+91.0620	10.0238	5257.4499		8.9998	-28.9599		-28.9840
F-7	806+97.1857	10.0238	5257.4539		9.3952	-22.6953		-22.7069
F-8	807+03.3094	10.0238	5257.4525		9.6946	-16.4254		-16.4298
F-9	807+09.4330	10.0237	5257.4455		9.8980	-10.1516		-10.1527
F-10	807+15.5567	10.0236	5257.4331		10.0052	-3.8755		-3.8755
P.C.C.	807+19.3375	10.0235	5257.4227		10.0235	0.0000	10.0235	0.0000

BREAK LINE

BENT LINE DESCRIPTION OR FRACTIONAL POINT DESIGNATION	STATION	OFFSET	ELEVATION		OFFSET X	ORDINATE Y	BENT LINE LENGTH FROM Y-AXIS OR OFFSET FROM EXTERIOR GIRDER	GIRDER LINE LENGTH
CL PR 3H S	803+18.0000	16.0000	5248.4048		-176.4060	-350.8015	-328.2059	-417.3910
AH BG 3H S	803+19.6527	16.0000	5248.4914		-174.9322	-349.8578	-325.4640	-415.6722
F-1	803+24.5622	16.0000	5248.7476		-170.6812	-347.0863		-410.5663
F-2	803+29.4441	16.0000	5248.9989		-166.4623	-344.2618		-405.4891
F-3	803+34.3281	16.0000	5249.2463		-162.2764	-341.3846		-400.4097
F-4	803+39.2144	16.0000	5249.4899		-158.1240	-338.4553		-395.3280
F-5	803+44.1027	16.0000	5249.7295		-154.0059	-335.4742		-390.2442
F-6	803+48.9932	16.0000	5249.9653		-149.9228	-332.4416		-385.1580
F-7	803+53.8857	16.0000	5250.1972		-145.8755	-329.3581		-380.0698
F-8	803+58.7802	16.0000	5250.4252		-141.8645	-326.2240		-374.9796
F-9	803+63.6766	16.0000	5250.6492		-137.8907	-323.0398		-369.8873
F-10	803+68.5749	16.0000	5250.8694		-133.9545	-319.8059		-364.7931
F-11	803+73.4750	16.0000	5251.0856		-130.0569	-316.5229		-359.6970
END TAPER	803+78.0000	16.0000	5251.2833		-126.1983	-313.1911		-354.9910

WEB 4

BENT LINE DESCRIPTION OR FRACTIONAL POINT DESIGNATION	STATION	OFFSET	ELEVATION		OFFSET X	ORDINATE Y	BENT LINE LENGTH FROM Y-AXIS OR OFFSET FROM EXTERIOR GIRDER	GIRDER LINE LENGTH
CL PR 3H S	803+18.0000	22.6127	5248.6269		-172.8517	-356.3778	-321.5933	-420.7011
AH BG 3H S	803+19.6566	22.5516	5248.7217		-171.4108	-355.3827	-318.9123	-418.9500
F-1	803+24.5384	22.3742	5248.9982		-167.1884	-352.4184		-413.7910
F-2	803+29.4223	22.2005	5249.2686		-163.0004	-349.4058		-408.6320
F-3	803+34.3084	22.0304	5249.5326		-158.8474	-346.3453		-403.4730
F-4	803+39.1965	21.8641	5249.7900		-154.7298	-343.2372		-398.3140
F-5	803+44.0866	21.7015	5250.0409		-150.6481	-340.0820		-393.1550
F-6	803+48.9787	21.5427	5250.2854		-146.6031	-336.8801		-387.9960
F-7	803+53.8728	21.3877	5250.5234		-142.5951	-333.6319		-382.8370
F-8	803+58.7687	21.2365	5250.7550		-138.6247	-330.3379		-377.6780
F-9	803+63.6665	21.0892	5250.9802		-134.6924	-326.9984		-372.5191
F-10	803+68.5660	20.9457	5251.1990		-130.7988	-323.6139		-367.3601
F-11	803+73.4673	20.8061	5251.4115		-126.9443	-320.1849		-362.2011
F-12	803+78.3703	20.6705	5251.6184		-123.1295	-316.7118		-357.0421
F-13	803+83.2750	20.5388	5251.8098		-119.3549	-313.1951		-351.8831
F-14	803+88.1813	20.4111	5251.9984		-115.6209	-309.6353		-346.7241
F-15	803+93.0891	20.2873	5252.1843		-111.9282	-306.0327		-341.5651
F-16	803+97.9985	20.1676	5252.3674		-108.2770	-302.3880		-336.4061
F-17	804+02.9093	20.0518	5252.5478		-104.6681	-298.7015		-331.2471
F-18	804+07.8215	19.9401	5252.7254		-101.1017	-294.9738		-326.0881
F-19	804+12.7351	19.8325	5252.9003		-97.5784	-291.2053		-320.9291
CL PR 4G	804+17.6500	19.7290	5253.0725		-94.0987	-287.3966	-129.1133	-315.7701
F-1	804+23.5556	19.6100	5253.2756		-89.9770	-282.7689		-309.5730
F-2	804+29.4629	19.4969	5253.4747		-85.9195	-278.0848		-303.3758
F-3	804+35.3719	19.3899	5253.6698		-81.9272	-273.3451		-297.1787
F-4	804+41.2825	19.2888	5253.8610		-78.0006	-268.5507		-290.9816
F-5	804+47.1945	19.1937	5254.0481		-74.1407	-263.7025		-284.7844
F-6	804+53.1079	19.1046	5254.2312		-70.3480	-258.8015		-278.5873
F-7	804+59.0227	19.0216	5254.4103		-66.6234	-253.8486		-272.3901
F-8	804+64.9386	18.9446	5254.5854		-62.9675	-248.8448		-266.1930
F-9	804+70.8556	18.8738	5254.7565		-59.3811	-243.7909		-259.9959
F-10	804+76.7736	18.8091	5254.9236		-55.8640	-238.6880		-253.7987
F-11	804+82.6926	18.7504	5255.0866		-52.4193	-233.5371		-247.6016
F-12	804+88.6124	18.6979	5255.2456		-49.0452	-228.3390		-241.4044
F-13	804+94.5330	18.6516	5255.4006		-45.7433	-222.0949		-235.2073
F-14	805+00.4542	18.6114	5255.5515		-42.5140	-217.8056		-229.0101
F-15	805+06.3760	18.5774	5255.6984		-39.3582	-212.4723		-222.8130
F-16	805+12.2982	18.5495	5255.8412		-36.2762	-207.0959		-216.6159
F-17	805+18.2208	18.5279	5255.9800		-33.2688	-201.6775		-210.4187
F-18	805+24.1437	18.5124	5256.1148		-30.3365	-196.2180		-204.2216
F-19	805+30.0668	18.5031	5256.2455		-27.4799	-190.7186		-198.0244
CL PR 5G	805+35.9900	18.5000	5256.3721		-24.6994	-185.1803	-27.5425	-191.8273
F-1	805+41.9065	18.5000	5256.4943		-22.0015	-179.6091		-185.6372
F-2	805+47.8230	18.5000	5256.6120		-19.3863	-173.9986		-179.4470
F-3	805+53.7395	18.5000	5256.7252		-16.8544	-168.3500		-173.2569
F-4	805+59.6560	18.5000	5256.8339		-14.4063	-162.6646		-167.0668
F-5	805+65.5725	18.5000	5256.9381		-12.0426	-156.9436		-160.8766
F-6	805+71.4890	18.5000	5257.0378		-9.7637	-151.1883		-154.6865
F-7	805+77.4055	18.5000	5257.1329		-7.5702	-145.3999		-148.4964
F-8	805+83.3220	18.5000	5257.2236		-5.4626	-139.5796		-142.3062
F-9	805+89.2385	18.5000	5257.3097		-3.4412	-133.7289		-136.1161
F-10	805+95.1550	18.5000	5257.3913		-1.5067	-127.8489		-129.9259
F-11	806+01.0715	18.5000	5257.4685		.3407	-121.9409		-123.7358
F-12	806+06.9880	18.5000	5257.5411		2.1005	-116.0062		-117.5457
F-13	806+12.9045	18.5000	5257.6092		3.7723	-110.0462		-111.3555
F-14	806+18.8210	18.5000	5257.6728		5.3558	-104.0621		-105.1654
F-15	806+24.7375	18.5000	5257.7319		6.8506	-98.0552		-98.9752
F-16	806+30.6540	18.5000	5257.7864		8.2564	-92.0268		-92.7851
F-17	806+36.5705	18.5000	5257.8365		9.5729	-85.9784		-86.5950
F-18	806+42.4870	18.5000	5257.8821		10.7998	-79.9111		-80.4048
F-19	806+48.4035	18.5000	5257.9231		11.9368	-73.8263		-74.2147
CL PR 6G	806+54.3200	18.5000	5257.9596		12.9837	-67.7254	13.1571	-68.0246
F-1	806+60.6951	18.5000	5257.9940		14.0106	-61.1350		-61.3546
F-2	806+67.0703	18.5000	5258.0231		14.9323	-54.5291		-54.6846
F-3	806+73.4454	18.5000	5258.0469		15.7487	-47.9093		-48.0146
F-4	806+79.8206	18.5000	5258.0655		16.4594	-41.2773		-41.3446
F-5	806+86.1957	18.5000	5258.0789		17.0644	-34.6349		-34.6746
F-6	806+92.5709	18.5000	5258.0870		17.5634	-27.9837		-28.0046
F-7	806+98.9460	18.5000	5258.0896		17.9563	-21.3253		-21.3346
F-8	807+05.3212	18.5000	5258.0856		18.2431	-14.6616		-14.6646
F-9	807+11.6963	18.5000	5258.0750		18.4236	-7.9941		-7.9946
F-10	807+18.0715	18.5000	5258.0579		18.4979	-1.3246		-1.3246
P.C.C.	807+19.3375	18.5000	5258.0537		18.5000	0.0000	18.5000	0.0000

RIGHT EDGE DECK

BENT LINE DESCRIPTION OR FRACTIONAL POINT DESIGNATION	STATION	OFFSET	ELEVATION		X	ORDINATE Y	BENT LINE LENGTH FROM Y-AXIS OR OFFSET FROM EXTERIOR GIRDER	GIRDER LINE LENGTH
CL PR 3H S	803+18.0000	27.6157	5248.8250		-170.1627	-360.5967	-316.5903	-425.7180
AH BG 3H S	803+19.6372	27.5553	5248.9235		-168.7213	-359.6022	-313.9085	-423.9668
F-1	803+24.5202	27.3777	5249.2145		-164.4467	-356.6040		-418.7455
F-2	803+29.4053	27.2038	5249.4995		-160.2069	-353.5568		-413.5242
F-3	803+34.2924	27.0336	5249.7779		-156.0025	-350.4610		-408.3029
F-4	803+39.1817	26.8671	5250.0499		-151.8339	-347.3170		-403.0817
F-5	803+44.0729	26.7043	5250.3153		-147.7018	-344.1253		-397.8604
F-6	803+48.9660	26.5454	5250.5742		-143.6067	-340.8862		-392.6391
F-7	803+53.8611	26.3902	5250.8268		-139.5491	-337.6003		-387.4178
F-8	803+58.7580	26.2389	5251.0728		-135.5296	-334.2678		-382.1966
F-9	803+63.6568	26.0914	5251.3126		-131.5487	-330.8894		-376.9753
F-10	803+68.5573	25.9478	5251.5459		-127.6070	-327.4654		-371.7540
F-11	803+73.4596	25.8081	5251.7729		-123.7049	-323.9962		-366.5327
F-12	803+78.3635	25.6723	5251.9933		-119.8429	-320.4824		-361.3115
F-13	803+83.2691	25.5405	5252.1847		-116.0217	-316.9244		-356.0902
F-14	803+88.1763	25.4127	5252.3733		-112.2416	-313.3226		-350.8689
F-15	803+93.0850	25.2888	5252.5592		-108.5033	-309.6776		-345.6496
F-16	803+97.9952	25.1689	5252.7424		-104.8071	-305.9898		-340.4264
F-17	804+02.9068	25.0531	5252.9228		-101.1536	-302.2598		-335.2051
F-18	804+07.8199	24.9413	5253.1005		-97.5433	-298.4879		-329.9838
F-19	804+12.7343	24.8336	5253.2754		-93.9766	-294.6748		-324.7625
CL PR 4G	804+17.6500	24.7299	5253.4475		-90.4540	-290.8208	-124.1124	-319.5412
F-1	804+23.5557	24.6109	5253.6506		-86.2821	-286.1388		-313.2701
F-2	804+29.4632	24.4977	5253.8498		-82.1752	-281.3996		-306.9990
F-3	804+35.3723	24.3906	5254.0449		-78.1343	-276.6041		-300.7279
F-4	804+41.2829	24.2894	5254.2360		-74.1600	-271.7532		-294.4568

NOTES:

Elevations are at top of Concrete Deck 0.1667 feet below finished grade.

Coordinates and girder line lengths are with respect to Ahead Tangent Curve G-1.

Bridge deck elevations, coordinates and lengths are for placing and construction of concrete deck only.

This information shall not be used for fabrication of steel box girders.

Refer to Framing Plans for Steel Fabrication Dimensions.

REVISIONS

	INITIAL	DATE	
DESIGNED BY	J.L.S.	5-88	CHECKED BY
CHECKED BY	B.A.A.	5-88	QUANTITIES BY
DETAILED BY	S.S.	5-88	CHECKED BY

DeLeuw, Cather & Company Denver, CO.

DIVISION OF HIGHWAYS

BRIDGE DECK ELEVATIONS

Designer	J. Stapleton	Structure Numbers	F-16-OL
Detailer	S. Shibao		

Drawing Number B-52 of 57 Drawings

Revision Dates (Preliminary Stage Only)

UD1:[100,3]208DECK.DGN;1
UDA1:[PLOTS]D2.PRF
DATE 10-MAY-1988 - TIME 09:15

STATE OF COLORADO
STATE DEPARTMENT OF HIGHWAYS
DIVISION OF HIGHWAYS:
D. O. H. FORM NO. 126
REV. FEB. 1984

AS CONSTRUCTED		
NO REVISIONS ☐	REVISED ☐	VOID ☐

FED. ROAD REGION	DIVISION	PROJ. NO.	SHEET NO.	SHEET TOTALS
VIII	COLO.	IR25-2(208)	143	

BENT LINE DESCRIPTION OR FRACTIONAL POINT DESIGNATION	STATION	OFFSET	ELEVATION	COORDINATES FROM LAYOUT LINE: OFFSET X	COORDINATES FROM LAYOUT LINE: ORDINATE Y	BENT LINE LENGTH FROM Y-AXIS OR OFFSET FROM EXTERIOR GIRDER	GIRDER LINE LENGTH
F-5	804+47.1950	24.1942	5254.4231	-70.2532	-266.8478		-288.1857
F-6	804+53.1085	24.1051	5254.6063	-66.4145	-261.8889		-281.9146
F-7	804+59.0232	24.0220	5254.7854	-62.6447	-256.8775		-275.6435
F-8	804+64.9391	23.9450	5254.9605	-58.9445	-251.8144		-269.3724
F-9	804+70.8561	23.8741	5255.1316	-55.3146	-246.7007		-263.1013
F-10	804+76.7742	23.8093	5255.2986	-51.7558	-241.5373		-256.8302
F-11	804+82.6931	23.7506	5255.4616	-48.2686	-236.3252		-250.5591
F-12	804+88.6129	23.6981	5255.6206	-44.8538	-231.0654		-244.2880
F-13	804+94.5334	23.6517	5255.7756	-41.5120	-225.7590		-238.0169
F-14	805+00.4546	23.6115	5255.9265	-38.2438	-220.4068		-231.7458
F-15	805+06.3763	23.5774	5256.0734	-35.0500	-215.0101		-225.4747
F-16	805+12.2985	23.5496	5256.2162	-31.9310	-209.5697		-219.2036
F-17	805+18.2211	23.5279	5256.3550	-28.8875	-204.0867		-212.9325
F-18	805+24.1439	23.5124	5256.4898	-25.9200	-198.5621		-206.6614
F-19	805+30.0669	23.5031	5256.6205	-23.0292	-192.9971		-200.3903
CL PR 5G	805+35.9900	23.5000	5256.7471	-20.2156	-187.3927	-22.5425	-194.1192
F-1	805+41.9065	23.5000	5256.8693	-17.4854	-181.7550		-187.8551
F-2	805+47.8230	23.5000	5256.9870	-14.8390	-176.0774		-181.5910
F-3	805+53.7395	23.5000	5257.1002	-12.2768	-170.3614		-175.3269
F-4	805+59.6560	23.5000	5257.2089	-9.7995	-164.6080		-169.0628
F-5	805+65.5725	23.5000	5257.3131	-7.4075	-158.8187		-162.7987
F-6	805+71.4890	23.5000	5257.4128	-5.1014	-152.9946		-156.5346
F-7	805+77.4055	23.5000	5257.5079	-2.8817	-147.1370		-150.2705
F-8	805+83.3220	23.5000	5257.5986	-.7489	-141.2473		-144.0064
F-9	805+89.2385	23.5000	5257.6847	1.2966	-135.3266		-137.7423
F-10	805+95.1550	23.5000	5257.7663	3.2543	-129.3763		-131.4782
F-11	806+01.0715	23.5000	5257.8435	5.1237	-123.3978		-125.2141
F-12	806+06.9880	23.5000	5257.9161	6.9046	-117.3922		-118.9500
F-13	806+12.9045	23.5000	5257.9842	8.5964	-111.3609		-112.6859
F-14	806+18.8210	23.5000	5258.0478	10.1988	-105.3053		-106.4218
F-15	806+24.7375	23.5000	5258.1069	11.7115	-99.2267		-100.1577
F-16	806+30.6540	23.5000	5258.1614	13.1341	-93.1263		-93.8937
F-17	806+36.5705	23.5000	5258.2115	14.4663	-87.0056		-87.6296
F-18	806+42.4870	23.5000	5258.2571	15.7078	-80.8658		-81.3655
F-19	806+48.4035	23.5000	5258.2981	16.8584	-74.7084		-75.1014
CL PR 6G	806+54.3200	23.5000	5258.3346	17.9178	-68.5346	18.1571	-68.8373
F-1	806+60.8380	23.5000	5258.3697	18.9790	-61.7158		-61.9364
F-2	806+67.3559	23.5000	5258.3992	19.9290	-54.8807		-55.0355
F-3	806+73.8739	23.5000	5258.4233	20.7675	-48.0310		-48.1346
F-4	806+80.3918	23.5000	5258.4419	21.4942	-41.1686		-41.2337
F-5	806+86.9098	23.5000	5258.4551	22.1091	-34.2952		-34.3328
F-6	806+93.4278	23.5000	5258.4627	22.6119	-27.4128		-27.4319
F-7	806+99.9457	23.5000	5258.4643	23.0024	-20.5230		-20.5311
F-8	807+06.4637	23.5000	5258.4585	23.2807	-13.6278		-13.6302
F-9	807+12.9816	23.5000	5258.4455	23.4465	-6.7290		-6.7293
P.C.C.	807+19.3375	23.5000	5258.4258	23.5000	0.0000	23.5000	0.0000

LEFT EDGE DECK

BENT LINE DESCRIPTION OR FRACTIONAL POINT DESIGNATION	STATION	OFFSET	ELEVATION	OFFSET X	ORDINATE Y	BENT LINE LENGTH FROM Y-AXIS OR OFFSET FROM EXTERIOR GIRDER	GIRDER LINE LENGTH
P.C.C.	807+19.3375	-10.5000	5255.8950	-10.5000	-.0000	-10.5000	0.0000
F-12	807+19.8602	-10.5000	5255.8939	-10.5002	.5136		.5136
F-13	807+25.2737	-10.5000	5255.8805	-10.5289	5.8322		5.8323
F-14	807+30.6871	-10.5000	5255.8640	-10.6055	11.1503		11.1510
F-15	807+36.1005	-10.5000	5255.8442	-10.7301	16.4675		16.4697
F-16	807+41.5140	-10.5000	5255.8212	-10.9026	21.7834		21.7884
F-17	807+46.9274	-10.5000	5255.7949	-11.1231	27.0975		27.1071
F-18	807+52.3408	-10.5000	5255.7649	-11.3916	32.4094		32.4258
F-19	807+57.7543	-10.5000	5255.7311	-11.7079	37.7187		37.7445
BK BG 7G	807+63.1677	-10.5000	5255.6936	-12.0722	43.0249	-15.6091	43.0632
CL PR 7G	807+65.3435	-10.5000	5255.6774	-12.2321	45.1566	-15.8159	45.2008
AH BG 7G	807+67.5137	-10.5000	5255.6607	-12.3993	47.2823	-16.0320	47.3331
F-1	807+72.1830	-10.5000	5255.6227	-12.7850	51.8536		51.9207
F-2	807+76.8523	-10.5000	5255.5818	-13.2063	56.4218		56.5083
F-3	807+81.5216	-10.5000	5255.5382	-13.6632	60.9866		61.0959
F-4	807+86.1910	-10.5000	5255.4917	-14.1555	65.5477		65.6835
F-5	807+90.8603	-10.5000	5255.4425	-14.6834	70.1048		70.2711
F-6	807+95.5296	-10.5000	5255.3904	-15.2467	74.6577		74.8587
F-7	808+00.1989	-10.5000	5255.3352	-15.8454	79.2060		79.4463
F-8	808+04.8682	-10.5000	5255.2768	-16.4794	83.7496		84.0339
F-9	808+09.5375	-10.5000	5255.2151	-17.1489	88.2881		88.6215
F-10	808+14.2068	-10.5000	5255.1503	-17.8536	92.8212		93.2091
F-11	808+18.8762	-10.5000	5255.0822	-18.5935	97.3488		97.7967
F-12	808+23.5455	-10.5000	5255.0109	-19.3687	101.8704		102.3843
F-13	808+28.2148	-10.5000	5254.9364	-20.1791	106.3858		106.9719
F-14	808+32.8841	-10.5000	5254.8587	-21.0245	110.8948		111.5595
F-15	808+37.5534	-10.5000	5254.7777	-21.9051	115.3971		116.1471
F-16	808+42.2227	-10.5000	5254.6935	-22.8206	119.8924		120.7347
F-17	808+46.8921	-10.5000	5254.6062	-23.7711	124.3805		125.3223
F-18	808+51.5614	-10.5000	5254.5161	-24.7565	128.8610		129.9100
F-19	808+56.2307	-10.5000	5254.4255	-25.7767	133.3337		134.4976
CL PR 8G	808+60.9000	-10.5000	5254.3348	-26.8317	137.7983	-27.5963	139.0852
F-1	808+67.7750	-10.5000	5254.2013	-28.4483	144.3567		145.8398
F-2	808+74.6500	-10.5000	5254.0679	-30.1398	150.8961		152.5945
F-3	808+81.5250	-10.5000	5253.9344	-31.9062	157.4157		159.3492
F-4	808+88.4030	-10.5000	5253.8009	-33.7472	163.9146		166.1039
F-5	808+95.2750	-10.5000	5253.6674	-35.6625	170.3921		172.8586
F-6	809+02.1500	-10.5000	5253.5339	-37.6519	176.8471		179.6133
F-7	809+09.0250	-10.5000	5253.4005	-39.7152	183.2789		186.3680
F-8	809+15.9000	-10.5000	5253.2670	-41.8520	189.6867		193.1227
F-9	809+22.7750	-10.5000	5253.1335	-44.0621	196.0695		199.8773
F-10	809+29.6500	-10.5000	5253.0000	-46.3451	202.4266		206.6320
F-11	809+36.5250	-10.5000	5252.8665	-48.7009	208.7572		213.3867
F-12	809+43.4000	-10.5000	5252.7331	-51.1291	215.0603		220.1414
F-13	809+50.2750	-10.5000	5252.5996	-53.6293	221.3352		226.8961
F-14	809+57.1500	-10.5000	5252.4661	-56.2012	227.5810		233.6508
F-15	809+64.0250	-10.5000	5252.3326	-58.8446	233.7970		240.4055
F-16	809+70.9000	-10.5000	5252.1991	-61.5589	239.9822		247.1602
F-17	809+77.7750	-10.5000	5252.0657	-64.3440	246.1360		253.9148
F-18	809+84.6500	-10.5000	5251.9322	-67.1994	252.2574		260.6695
F-19	809+91.5250	-10.5000	5251.7987	-70.1248	258.3457		267.4242
CL PR 9G	809+98.4000	-10.5000	5251.6652	-73.1197	264.4001	-81.8100	274.1789
F-1	810+07.0370	-10.5000	5251.4975	-76.9802	271.9569		282.6648
F-2	810+15.6740	-10.5000	5251.3298	-80.9491	279.4573		291.1506
F-3	810+24.3110	-10.5000	5251.1621	-85.0255	286.8999		299.6365
F-4	810+32.9480	-10.5000	5250.9944	-89.2087	294.2829		308.1223
F-5	810+41.5850	-10.5000	5250.8268	-93.4976	301.6050		316.6082
F-6	810+50.2220	-10.5000	5250.6591	-97.8916	308.8646		325.0940
F-7	810+58.8590	-10.5000	5250.4914	-102.3896	316.0602		333.5799
F-8	810+67.4960	-10.5000	5250.3237	-106.9906	323.1904		342.0657
F-9	810+76.1330	-10.5000	5250.1560	-111.6939	330.2535		350.5516
F-10	810+84.7700	-10.5000	5249.9883	-116.4983	337.2482		359.0374
F-11	810+93.4070	-10.5000	5249.8206	-121.4029	344.1730		367.5233
F-12	811+02.0440	-10.5000	5249.6529	-126.4067	351.0265		376.0091
F-13	811+10.6810	-10.5000	5249.4852	-131.5086	357.8073		384.4950
F-14	811+19.3180	-10.5000	5249.3175	-136.7076	364.5139		392.9808
F-15	811+27.9550	-10.5000	5249.1499	-142.0026	371.1450		401.4667
F-16	811+36.5920	-10.5000	5248.9822	-147.3925	377.6992		409.9525
F-17	811+45.2290	-10.5000	5248.8145	-152.8762	384.1752		418.4384
F-18	811+53.8660	-10.5000	5248.6468	-158.4525	390.5715		426.9243
F-19	811+62.5030	-10.5000	5248.4791	-164.1204	396.8869		435.4101
CL PR 10G	811+71.1400	-10.5000	5248.3114	-169.8785	403.1200	-232.8258	443.8960
F-1	811+78.0470	-10.5000	5248.1773	-174.5475	408.0446		450.6821
F-2	811+84.9540	-10.5000	5248.0432	-179.2729	412.9151		457.4682
F-3	811+91.8610	-10.5000	5247.9091	-184.0540	417.7309		464.2543
F-4	811+98.7680	-10.5000	5247.7750	-188.8902	422.4914		471.0405
F-5	812+05.6750	-10.5000	5247.6409	-193.7809	427.1958		477.8266
F-6	812+12.5820	-10.5000	5247.5068	-198.7255	431.8437		484.6127
F-7	812+19.4890	-10.5000	5247.3727	-203.7232	436.4343		491.3988
F-8	812+26.3960	-10.5000	5247.2386	-208.7734	440.9671		498.1850
F-9	812+33.3030	-10.5000	5247.1045	-213.8755	445.4415		504.9711
F-10	812+40.2100	-10.5000	5246.9704	-219.0287	449.8568		511.7572
F-11	812+47.1170	-10.5000	5246.8363	-224.2325	454.2125		518.5434
F-12	812+54.0240	-10.5000	5246.7022	-229.4860	458.5080		525.3295
F-13	812+60.9310	-10.5000	5246.5681	-234.7886	462.7428		532.1156
F-14	812+67.8380	-10.5000	5246.4340	-240.1396	466.9162		538.9017
F-15	812+74.7450	-10.5000	5246.2999	-245.5383	471.0278		545.6879
F-16	812+81.6520	-10.5000	5246.1658	-250.9840	475.0769		552.4740
F-17	812+88.5590	-10.5000	5246.0317	-256.4760	479.0631		559.2601
F-18	812+95.4660	-10.5000	5245.8976	-262.0134	482.9858		566.0463
F-19	813+02.3730	-10.5000	5245.7635	-267.5957	486.8445		572.8324
CL PR 11G	813+09.2800	-10.5000	5245.6294	-273.2220	490.6387	-492.8860	579.6185
F-1	813+14.8300	-10.5000	5245.5216	-277.7743	493.6404		585.0714
F-2	813+20.3800	-10.5000	5245.4138	-282.3542	496.5998		590.5243
F-3	813+25.9300	-10.5000	5245.3061	-286.9612	499.5167		595.9771
F-4	813+31.4800	-10.5000	5245.1983	-291.5951	502.3909		601.4300
F-5	813+37.0300	-10.5000	5245.0906	-296.2553	505.2221		606.8829
F-6	813+42.5800	-10.5000	5244.9828	-300.9416	508.0101		612.3358
F-7	813+48.1300	-10.5000	5244.8751	-305.6534	510.7546		617.7886
F-8	813+53.6800	-10.5000	5244.7673	-310.3904	513.4555		623.2415
F-9	813+59.2300	-10.5000	5244.6596	-315.1522	516.1123		628.6944
F-10	813+64.7800	-10.5000	5244.5518	-319.9383	518.7251		634.1473
F-11	813+70.3300	-10.5000	5244.4440	-324.7485	521.2934		639.6001
F-12	813+75.8800	-10.5000	5244.3363	-329.5821	523.8172		645.0530
F-13	813+81.4300	-10.5000	5244.2285	-334.4389	526.2961		650.5059
F-14	813+86.9800	-10.5000	5244.1208	-339.3185	528.7300		655.9588
F-15	813+92.5300	-10.5000	5244.0130	-344.2203	531.1186		661.4116
F-16	813+98.0800	-10.5000	5243.9053	-349.1440	533.4618		666.8645
F-17	814+03.6300	-10.5000	5243.7975	-354.0892	535.7594		672.3174
F-18	814+09.1800	-10.5000	5243.6898	-359.0554	538.0111		677.7703
F-19	814+14.7300	-10.5000	5243.5820	-364.0423	540.2168		683.2231
CL PR 12G	814+20.2800	-10.5000	5243.4742	-369.0493	542.3763	-941.9957	688.6760
F-1	814+24.7160	-10.5000	5243.3881	-373.0655	544.0689		693.0344
F-2	814+29.1520	-10.5000	5243.3020	-377.0942	545.7318		697.3927
F-3	814+33.5880	-10.5000	5243.2159	-381.1350	547.3649		701.7511
F-4	814+38.0240	-10.5000	5243.1297	-385.1878	548.9681		706.1095
F-5	814+42.4600	-10.5000	5243.0436	-389.2524	550.5412		710.4679
F-6	814+46.8960	-10.5000	5242.9575	-393.3284	552.0843		714.8262
F-7	814+51.3320	-10.5000	5242.8714	-397.4158	553.5972		719.1846
F-8	814+55.7680	-10.5000	5242.7852	-401.5142	555.0798		723.5430
F-9	814+60.2040	-10.5000	5242.6991	-405.6235	556.5321		727.9013
F-10	814+64.6400	-10.5000	5242.6130	-409.7434	557.9540		732.2597
F-11	814+69.0760	-10.5000	5242.5269	-413.8737	559.3454		736.6181
F-12	814+73.5120	-10.5000	5242.4407	-418.0142	560.7061		740.9764
F-13	814+77.9480	-10.5000	5242.3549	-422.1646	562.0363		745.3348
F-14	814+82.3840	-10.5000	5242.2704	-426.3247	563.3357		749.6932
F-15	814+86.8200	-10.5000	5242.1874	-430.4944	564.6043		754.0516
F-16	814+91.2560	-10.5000	5242.1057	-434.6733	565.8421		758.4099
F-17	814+95.6920	-10.5000	5242.0255	-438.8612	567.0490		762.7683
F-18	815+00.1280	-10.5000	5241.9467	-443.0580	568.2248		767.1267
F-19	815+04.5640	-10.5000	5241.8693	-447.2633	569.3696		771.4850
CL ABT 13G	815+09.0000	-10.5000	5241.7934	-451.4770	570.4832	-1791.9487	775.8434
BF ABT 13G	815+11.7990	-10.5000	5241.7462	-454.1399	571.1699	-1802.5180	778.5934

WEB 1

BENT LINE DESCRIPTION OR FRACTIONAL POINT DESIGNATION	STATION	OFFSET	ELEVATION	X	ORDINATE Y	BENT LINE LENGTH FROM Y-AXIS OR OFFSET FROM EXTERIOR GIRDER	GIRDER LINE LENGTH
P.C.C.	807+19.3375	-5.5000	5256.2672	-5.5000	-.0000	-5.5000	0.0000
F-12	807+21.8767	-5.5000	5256.2609	-5.5053	2.5159		2.5159
F-13	807+27.4814	-5.5000	5256.2442	-5.5548	8.0690		8.0692
F-14	807+33.0860	-5.5000	5256.2238	-5.6561	13.6213		13.6225
F-15	807+38.6907	-5.5000	5256.1997	-5.8092	19.1725		19.1758
F-16	807+44.2954	-5.5000	5256.1719	-6.0142	24.7219		24.7291
F-17	807+49.9000	-5.5000	5256.1401	-6.2711	30.2693		30.2824
F-18	807+55.5047	-5.5000	5256.1043	-6.5797	35.8140		35.8357
F-19	807+61.1093	-5.5000	5256.0645	-6.9402	41.3555		41.3889
BK BG 7G	807+66.7140	-5.5000	5256.0206	-7.3523	46.8935	-9.5064	46.9422
CL PR 7G	807+68.8626	-5.5000	5256.0027	-7.5241	49.0154	-9.7285	49.0711
AH BG 7G	807+71.0059	-5.5000	5255.9843	-7.7029	51.1315	-9.9598	51.1948
F-1	807+75.5006	-5.5000	5255.9437	-8.1026	55.5671		55.6483
F-2	807+79.9953	-5.5000	5255.9005	-8.5355	59.9995		60.1018
F-3	807+84.4900	-5.5000	5255.8547	-9.0015	64.4285		64.5553
F-4	807+88.9847	-5.5000	5255.8063	-9.5007	68.8539		69.0088
F-5	807+93.4794	-5.5000	5255.7552	-10.0331	73.2755		73.4623
F-6	807+97.9741	-5.5000	5255.7016	-10.5986	77.6929		77.9158
F-7	808+02.4688	-5.5000	5255.6451	-11.1971	82.1060		82.3693
F-8	808+06.9635	-5.5000	5255.5858	-11.8287	86.5145		86.8228
F-9	808+11.4583	-5.5000	5255.5237	-12.4933	90.9181		91.2763
F-10	808+15.9530	-5.5000	5255.4588	-13.1908	95.3167		95.7298
F-11	808+20.4477	-5.5000	5255.3911	-13.9213	99.7098		100.1833
F-12	808+24.9424	-5.5000	5255.3207	-14.6847	104.0974		104.6368
F-13	808+29.4371	-5.5000	5255.2474	-15.4809	108.4791		109.0903
F-14	808+33.9318	-5.5000	5255.1713	-16.3100	112.8548		113.5438
F-15	808+38.4265	-5.5000	5255.0924	-17.1718	117.2241		117.9973
F-16	808+42.9212	-5.5000	5255.0107	-18.0663	121.5868		122.4508
F-17	808+47.4159	-5.5000	5254.9262	-18.9934	125.9428		126.9043
F-18	808+51.9106	-5.5000	5254.8394	-19.9532	130.2916		131.3578
F-19	808+56.4053	-5.5000	5254.7521	-20.9455	134.6331		135.8113
CL PR 8G	808+60.9000	-5.5000	5254.6648	-21.9703	138.9671	-22.5963	140.2648
F-1	808+67.7750	-5.5000	5254.5313	-23.6005	145.5811		147.0768
F-2	808+74.6500	-5.5000	5254.3979	-25.3064	152.1760		153.8888
F-3	808+81.5250	-5.5000	5254.2644	-27.0878	158.7509		160.7008
F-4	808+88.4000	-5.5000	5254.1309	-28.9444	165.3049		167.5128
F-5	808+95.2750	-5.5000	5253.9974	-30.8759	171.8373		174.3247
F-6	809+02.1500	-5.5000	5253.8639	-32.8822	178.3471		181.1367
F-7	809+09.0250	-5.5000	5253.7305	-34.9630	184.8335		187.9487
F-8	809+15.9000	-5.5000	5253.5970	-37.1179	191.2956		194.7607
F-9	809+22.7750	-5.5000	5253.4635	-39.3467	197.7325		201.5727
F-10	809+29.6500	-5.5000	5253.3300	-41.6492	204.1436		208.3846
F-11	809+36.5250	-5.5000	5253.1965	-44.0249	210.5278		215.1966
F-12	809+43.4000	-5.5000	5253.0631	-46.4737	216.8844		222.0086
F-13	809+50.2750	-5.5000	5252.9296	-48.9951	223.2125		228.8206
F-14	809+57.1500	-5.5000	5252.7961	-51.5888	229.5113		235.6326
F-15	809+64.0250	-5.5000	5252.6626	-54.2546	235.7800		242.4445
F-16	809+70.9000	-5.5000	5252.5291	-56.9920	242.0177		249.2565
F-17	809+77.7750	-5.5000	5252.3957	-59.8007	248.2237		256.0685
F-18	809+84.6500	-5.5000	5252.2622	-62.6804	254.3970		262.8805
F-19	809+91.5250	-5.5000	5252.1287	-65.6305	260.5370		269.6924
CL PR 9G	809+98.4000	-5.5000	5251.9952	-68.6509	266.6427	-76.8100	276.5044
F-1	810+07.0370	-5.5000	5251.8275	-72.5441	274.2636		285.0623
F-2	810+15.6740	-5.5000	5251.6598	-76.5466	281.8276		293.6201
F-3	810+24.3110	-5.5000	5251.4921	-80.6576	289.3333		302.1779
F-4	810+32.9480	-5.5000	5251.3244	-84.8763	296.7790		310.7357
F-5	810+41.5850	-5.5000	5251.1568	-89.2016	304.1632		319.2936
F-6	810+50.2220	-5.5000	5250.9891	-93.6328	311.4844		327.8514
F-7	810+58.8590	-5.5000	5250.8214	-98.1689	318.7410		336.4092
F-8	810+67.4960	-5.5000	5250.6537	-102.8090	325.9316		344.9670
F-9	810+76.1330	-5.5000	5250.4860	-107.5522	333.0546		353.5249
F-10	810+84.7700	-5.5000	5250.3183	-112.3974	340.1087		362.0827
F-11	810+93.4070	-5.5000	5250.1506	-117.3436	347.0922		370.6405
F-12	811+02.0440	-5.5000	5249.9829	-122.3898	354.0039		379.1984
F-13	811+10.6810	-5.5000	5249.8152	-127.5350	360.8421		387.7562
F-14	811+19.3180	-5.5000	5249.6475	-132.7781	367.6057		396.3140
F-15	811+27.9550	-5.5000	5249.4799	-138.1180	374.2930		404.8718
F-16	811+36.5920	-5.5000	5249.3122	-143.5536	380.9028		413.4297
F-17	811+45.2290	-5.5000	5249.1445	-149.0838	387.4336		421.9875
F-18	811+53.8660	-5.5000	5248.9768	-154.7074	393.8842		430.5453
F-19	811+62.5030	-5.5000	5248.8091	-160.4233	400.2532		439.1031
CL PR 10G	811+71.1400	-5.5000	5248.6414	-166.2303	406.5392	-227.8258	447.6610
F-1	811+78.0470	-5.5000	5248.5073	-170.9389	411.5056		454.5047
F-2	811+84.9540	-5.5000	5248.3732	-175.7044	416.4174		461.3483
F-3	811+91.8610	-5.5000	5248.2391	-180.5260	421.2740		468.1920
F-4	811+98.7680	-5.5000	5248.1050	-185.4033	426.0749		475.0357
F-5	812+05.6750	-5.5000	5247.9709	-190.3355	430.8192		481.8794
F-6	812+12.5820	-5.5000	5247.8368	-195.3219	435.5065		488.7231
F-7	812+19.4890	-5.5000	5247.7027	-200.3621	440.1361		495.5668
F-8	812+26.3960	-5.5000	5247.5686	-205.4551	444.7073		502.4105
F-9	812+33.3030	-5.5000	5247.4345	-210.6005	449.2196		509.2541
F-10	812+40.2100	-5.5000	5247.3004	-215.7974	453.6724		516.0978
F-11	812+47.1170	-5.5000	5247.1663	-221.0453	458.0650		522.9415
F-12	812+54.0240	-5.5000	5247.0322	-226.3434	462.3970		529.7852
F-13	812+60.9310	-5.5000	5246.8981	-231.6910	466.6677		536.6289
F-14	812+67.8380	-5.5000	5246.7640	-237.0874	470.8765		543.4726
F-15	812+74.7450	-5.5000	5246.6299	-242.5319	475.0229		550.3163
F-16	812+81.6520	-5.5000	5246.4958	-248.0238	479.1064		557.1600
F-17	812+88.5590	-5.5000	5246.3617	-253.5623	483.1264		564.0036
F-18	812+95.4660	-5.5000	5246.2276	-259.1467	487.0824		570.8473
F-19	813+02.3730	-5.5000	5246.0935	-264.7763	490.9738		577.6910
CL PR 11G	813+09.2800	-5.5000	5245.9594	-270.4503	494.8002	-487.8060	584.5347
F-1	813+14.8300	-5.5000	5245.8516	-275.0412	497.8273		590.0338
F-2	813+20.3800	-5.5000	5245.7438	-279.6600	500.8118		595.5329
F-3	813+25.9300	-5.5000	5245.6361	-284.3061	503.7535		601.0321
F-4	813+31.4800	-5.5000	5245.5283	-288.9793	506.6521		606.5312
F-5	813+37.0300	-5.5000	5245.4206	-293.6790	509.5073		612.0303
F-6	813+42.5800	-5.5000	5245.3128	-298.4050	512.3189		617.5294
F-7	813+48.1300	-5.5000	5245.2051	-303.1568	515.0867		623.0286
F-8	813+53.6800	-5.5000	5245.0973	-307.9340	517.8105		628.5277
F-9	813+59.2300	-5.5000	5244.9896	-312.7362	520.4899		634.0268
F-10	813+64.7800	-5.5000	5244.8818	-317.5629	523.1248		639.5259
F-11	813+70.3300	-5.5000	5244.7740	-322.4138	525.7149		645.0251
F-12	813+75.8800	-5.5000	5244.6663	-327.2885	528.2600		650.5242
F-13	813+81.4300	-5.5000	5244.5585	-332.1865	530.7600		656.0233
F-14	813+86.9800	-5.5000	5244.4508	-337.1074	533.2145		661.5224
F-15	813+92.5300	-5.5000	5244.3430	-342.0508	535.6234		667.0216
F-16	813+98.0800	-5.5000	5244.2353	-347.0163	537.9865		672.5207
F-17	814+03.6300	-5.5000	5244.1275	-352.0035	540.3036		678.0198
F-18	814+09.1800	-5.5000	5244.0198	-357.0118	542.5744		683.5189
F-19	814+14.7300	-5.5000	5243.9120	-362.0409	544.7988		689.0181

NOTES:

Elevations are at top of Concrete Deck 0.1667 feet below finished grade.

Coordinates and girder line lengths are with respect to Ahead Tangent Curve G-2.

Bridge deck elevations, coordinates and lengths are for placing and construction of concrete deck only.

This information shall not be used for fabrication of steel box girders.

Refer to Framing Plans for Steel Fabrication Dimensions.

DESIGNED BY	J.L.S.	5-88	CHECKED BY
CHECKED BY	B.A.A.	5-88	QUANTITIES BY
DETAILED BY	S.S.	5-88	CHECKED BY

REVISIONS

DeLeuw, Cather & Company Denver, CO.

DIVISION OF HIGHWAYS

BRIDGE DECK ELEVATIONS

Designer J. Stapleton | Structure Numbers F-16-OL
Detailer S. Shibao

Drawing Number B-53 of 57 Drawings

Revision Dates (Preliminary Stage Only)

UD1:[100,3]208DECK2.DGN;1
UDA1:[PLOTS]D3B.PRF
DATE 10-MAY-1988 - TIME 14:03

STATE OF COLORADO
STATE DEPARTMENT OF HIGHWAYS
DIVISION OF HIGHWAYS:
D. O. H. FORM NO. 126:
REV. FEB. 1984

AS CONSTRUCTED

NO REVISIONS ☐ REVISED ☐ VOID ☐

FED. ROAD REGION	DIVISION	PROJ. NO.	SHEET NO.	SHEET TOTALS
VIII	COLO.	IR25-2(208)	144	

BENT LINE DESCRIPTION OR FRACTIONAL POINT DESIGNATION	STATION	OFFSET	ELEVATION	COORDINATES FROM LAYOUT LINE: OFFSET X	COORDINATES FROM LAYOUT LINE: ORDINATE Y	BENT LINE LENGTH FROM Y-AXIS OR OFFSET FROM EXTERIOR GIRDER	GIRDER LINE LENGTH
CL PR 12G	814+20.2800	-5.5000	5243.8042	-367.0904	546.9766	-936.9957	694.5172
F-1	814+24.7160	-5.5000	5243.7181	-371.1407	548.6836		698.9125
F-2	814+29.1520	-5.5000	5243.6320	-375.2036	550.3606		703.3079
F-3	814+33.5880	-5.5000	5243.5459	-379.2787	552.0075		707.7032
F-4	814+38.0240	-5.5000	5243.4597	-383.3658	553.6243		712.0985
F-5	814+42.4600	-5.5000	5243.3736	-387.4648	555.2108		716.4939
F-6	814+46.8960	-5.5000	5243.2875	-391.5755	556.7670		720.8892
F-7	814+51.3320	-5.5000	5243.2014	-395.6975	558.2927		725.2846
F-8	814+55.7680	-5.5000	5243.1152	-399.8307	559.7879		729.6799
F-9	814+60.2040	-5.5000	5243.0291	-403.9748	561.2525		734.0752
F-10	814+64.6400	-5.5000	5242.9430	-408.1297	562.6864		738.4706
F-11	814+69.0760	-5.5000	5242.8569	-412.2950	564.0896		742.8659
F-12	814+73.5120	-5.5000	5242.7707	-416.4706	565.4619		747.2612
F-13	814+77.9480	-5.5000	5242.6849	-420.6562	566.8034		751.6566
F-14	814+82.3840	-5.5000	5242.6004	-424.8517	568.1138		756.0519
F-15	814+86.8200	-5.5000	5242.5174	-429.0567	569.3932		760.4472
F-16	814+91.2560	-5.5000	5242.4357	-433.2710	570.6415		764.8426
F-17	814+95.6920	-5.5000	5242.3555	-437.4945	571.8585		769.2379
F-18	815+00.1280	-5.5000	5242.2767	-441.7268	573.0444		773.6333
F-19	815+04.5640	-5.5000	5242.1993	-445.9678	574.1988		778.0286
CL ABT 13G	815+09.0000	-5.5000	5242.1234	-450.2172	575.3220	-1786.9487	782.4239
BF ABT 13G	815+11.7755	-5.5000	5242.0766	-452.8801	576.0087	-1797.5179	785.1739

PROFILE GRADE LINE

BENT LINE DESCRIPTION OR FRACTIONAL POINT DESIGNATION	STATION	OFFSET	ELEVATION	OFFSET X	ORDINATE Y	BENT LINE LENGTH FROM Y-AXIS OR OFFSET FROM EXTERIOR GIRDER	GIRDER LINE LENGTH
P.C.C.	807+19.3375	0.0000	5256.6766	-.0000	-.0000	-.0000	0.0000
F-12	807+24.0462	0.0000	5256.6630	-.0185	4.7087		4.7087
F-13	807+29.8567	0.0000	5256.6423	-.0922	10.5187		10.5192
F-14	807+35.6672	0.0000	5256.6172	-.2222	16.3277		16.3297
F-15	807+41.4778	0.0000	5256.5878	-.4084	22.1352		22.1403
F-16	807+47.2883	0.0000	5256.5541	-.6509	27.9407		27.9508
F-17	807+53.0988	0.0000	5256.5160	-.9496	33.7435		33.7613
F-18	807+58.9093	0.0000	5256.4735	-1.3045	39.5431		39.5718
F-19	807+64.7198	0.0000	5256.4267	-1.7155	45.3391		45.3823
BK BG 7G	807+70.5304	0.0000	5256.3756	-2.1826	51.1308	-2.8221	51.1929
CL PR 7G	807+72.6500	0.0000	5256.3558	-2.3670	53.2424	-3.0604	53.3125
AH BG 7G	807+74.7646	0.0000	5256.3356	-2.5583	55.3483	-3.3079	55.4271
F-1	807+79.0713	0.0000	5256.2925	-2.9710	59.6352		59.7338
F-2	807+83.3781	0.0000	5256.2470	-3.4144	63.9191		64.0406
F-3	807+87.6849	0.0000	5256.1992	-3.8886	68.1997		68.3474
F-4	807+91.9916	0.0000	5256.1490	-4.3935	72.4767		72.6541
F-5	807+96.2984	0.0000	5256.0963	-4.9291	76.7501		76.9609
F-6	808+00.6052	0.0000	5256.0413	-5.4953	81.0194		81.2677
F-7	808+04.9120	0.0000	5255.9839	-6.0922	85.2846		85.5745
F-8	808+09.2187	0.0000	5255.9241	-6.7196	89.5454		89.8812
F-9	808+13.5255	0.0000	5255.8619	-7.3777	93.8016		94.1880
F-10	808+17.8323	0.0000	5255.7973	-8.0662	98.0530		98.4948
F-11	808+22.1391	0.0000	5255.7304	-8.7853	102.2993		102.8016
F-12	808+26.4458	0.0000	5255.6610	-9.5348	106.5404		107.1083
F-13	808+30.7526	0.0000	5255.5893	-10.3147	110.7759		111.4151
F-14	808+35.0594	0.0000	5255.5152	-11.1251	115.0057		115.7219
F-15	808+39.3661	0.0000	5255.4386	-11.9657	119.2297		120.0286
F-16	808+43.6729	0.0000	5255.3597	-12.8367	123.4474		124.3354
F-17	808+47.9797	0.0000	5255.2784	-13.7379	127.6589		128.6422
F-18	808+52.2865	0.0000	5255.1951	-14.6694	131.8637		132.9490
F-19	808+56.5932	0.0000	5255.1114	-15.6309	136.0617		137.2557
CL PR 8G	808+60.9000	0.0000	5255.0278	-16.6226	140.2528	-17.0963	141.5625
F-1	808+67.7750	0.0000	5254.8943	-18.2680	146.9279		148.4375
F-2	808+74.6500	0.0000	5254.7609	-19.9897	153.5838		155.3125
F-3	808+81.5250	0.0000	5254.6274	-21.7875	160.2196		162.1875
F-4	808+88.4000	0.0000	5254.4939	-23.6613	166.8342		169.0625
F-5	808+95.2750	0.0000	5254.3604	-25.6107	173.4270		175.9375
F-6	809+02.1500	0.0000	5254.2269	-27.6356	179.9970		182.8125
F-7	809+09.0250	0.0000	5254.0935	-29.7356	186.5434		189.6875
F-8	809+15.9000	0.0000	5253.9600	-31.9104	193.0653		196.5625
F-9	809+22.7750	0.0000	5253.8265	-34.1599	199.5619		203.4375
F-10	809+29.6500	0.0000	5253.6930	-36.4836	206.0322		210.3125
F-11	809+36.5250	0.0000	5253.5595	-38.8813	212.4755		217.1875
F-12	809+43.4000	0.0000	5253.4261	-41.3527	218.8909		224.0625
F-13	809+50.2750	0.0000	5253.2926	-43.8975	225.2776		230.9375
F-14	809+57.1500	0.0000	5253.1591	-46.5152	231.6346		237.8125
F-15	809+64.0250	0.0000	5253.0256	-49.2057	237.9613		244.6875
F-16	809+70.9000	0.0000	5252.8921	-51.9684	244.2567		251.5625
F-17	809+77.7750	0.0000	5252.7587	-54.8031	250.5201		258.4375
F-18	809+84.6500	0.0000	5252.6252	-57.7094	256.7506		265.3125
F-19	809+91.5250	0.0000	5252.4917	-60.6868	262.9473		272.1875
CL PR 9G	809+98.4000	0.0000	5252.3582	-63.7351	269.1095	-71.3100	279.0625
F-1	810+07.0370	0.0000	5252.1905	-67.6644	276.8009		287.6995
F-2	810+15.6740	0.0000	5252.0228	-71.7039	284.4350		296.3365
F-3	810+24.3110	0.0000	5251.8551	-75.8530	292.0100		304.9735
F-4	810+32.9480	0.0000	5251.6874	-80.1106	299.5246		313.6105
F-5	810+41.5850	0.0000	5251.5198	-84.4760	306.9771		322.2475
F-6	810+50.2220	0.0000	5251.3521	-88.9482	314.3661		330.8845
F-7	810+58.8590	0.0000	5251.1844	-93.5263	321.6898		339.5215
F-8	810+67.4960	0.0000	5251.0167	-98.2093	328.9469		348.1585
F-9	810+76.1330	0.0000	5250.8490	-102.9963	336.1359		356.7955
F-10	810+84.7700	0.0000	5250.6813	-107.8863	343.2552		365.4325
F-11	810+93.4070	0.0000	5250.5136	-112.8783	350.3033		374.0695
F-12	811+02.0440	0.0000	5250.3459	-117.9712	357.2789		382.7065
F-13	811+10.6810	0.0000	5250.1782	-123.1640	364.1805		391.3435
F-14	811+19.3180	0.0000	5250.0105	-128.4556	371.0066		399.9805
F-15	811+27.9550	0.0000	5249.8429	-133.8449	377.7558		408.6175
F-16	811+36.5920	0.0000	5249.6752	-139.3308	384.4267		417.2545
F-17	811+45.2290	0.0000	5249.5075	-144.9122	391.0180		425.8915
F-18	811+53.8660	0.0000	5249.3398	-150.5878	397.5282		434.5285
F-19	811+62.5030	0.0000	5249.1721	-156.3566	403.9561		443.1655
CL PR 10G	811+71.1400	0.0000	5249.0044	-162.2173	410.3003	-222.3258	451.8025
F-1	811+78.0470	0.0000	5248.8703	-166.9695	415.3126		458.7095
F-2	811+84.9540	0.0000	5248.7362	-171.7790	420.2699		465.6165
F-3	811+91.8610	0.0000	5248.6021	-176.6453	425.1714		472.5235
F-4	811+98.7680	0.0000	5248.4680	-181.5676	430.0167		479.4305
F-5	812+05.6750	0.0000	5248.3339	-186.5455	434.8049		486.3375
F-6	812+12.5820	0.0000	5248.1998	-191.5781	439.5356		493.2445
F-7	812+19.4890	0.0000	5248.0657	-196.6648	444.2080		500.1515
F-8	812+26.3960	0.0000	5247.9316	-201.8050	448.8215		507.0585
F-9	812+33.3030	0.0000	5247.7975	-206.9980	453.3755		513.9655
F-10	812+40.2100	0.0000	5247.6634	-212.2430	457.8695		520.8725
F-11	812+47.1170	0.0000	5247.5293	-217.5394	462.3028		527.7795
F-12	812+54.0240	0.0000	5247.3952	-222.8065	466.6748		534.6865

BENT LINE DESCRIPTION OR FRACTIONAL POINT DESIGNATION	STATION	OFFSET	ELEVATION	COORDINATES FROM LAYOUT LINE: OFFSET X	COORDINATES FROM LAYOUT LINE: ORDINATE Y	BENT LINE LENGTH FROM Y-AXIS OR OFFSET FROM EXTERIOR GIRDER	GIRDER LINE LENGTH
F-13	812+60.9310	0.0000	5247.2611	-228.2036	470.9850		541.5935
F-14	812+67.8380	0.0000	5247.1270	-233.7299	475.2328		548.5005
F-15	812+74.7450	0.0000	5246.9929	-239.2248	479.4176		555.4075
F-16	812+81.6520	0.0000	5246.8588	-244.7675	483.5389		562.3145
F-17	812+88.5590	0.0000	5246.7247	-250.3572	487.5960		569.2215
F-18	812+95.4660	0.0000	5246.5906	-255.9933	491.5886		576.1285
F-19	813+02.3730	0.0000	5246.4565	-261.6750	495.5161		583.0355
CL PR 11G	813+09.2800	0.0000	5246.3224	-267.4015	499.3778	-482.3860	589.9425
F-1	813+14.8300	0.0000	5246.2146	-272.0349	502.4329		595.4925
F-2	813+20.3800	0.0000	5246.1068	-276.6964	505.4451		601.0425
F-3	813+25.9300	0.0000	5245.9991	-281.3855	508.4140		606.5925
F-4	813+31.4800	0.0000	5245.8913	-286.1019	511.3394		612.1425
F-5	813+37.0300	0.0000	5245.7836	-290.8451	514.2210		617.6925
F-6	813+42.5800	0.0000	5245.6758	-295.6148	517.0587		623.2425
F-7	813+48.1300	0.0000	5245.5681	-300.4106	519.8521		628.7925
F-8	813+53.6800	0.0000	5245.4603	-305.2320	522.6010		634.3425
F-9	813+59.2300	0.0000	5245.3526	-310.0786	525.3052		639.8925
F-10	813+64.7800	0.0000	5245.2448	-314.9500	527.9644		645.4425
F-11	813+70.3300	0.0000	5245.1370	-319.8458	530.5785		650.9925
F-12	813+75.8800	0.0000	5245.0293	-324.7655	533.1472		656.5425
F-13	813+81.4300	0.0000	5244.9215	-329.7088	535.6703		662.0925
F-14	813+86.9800	0.0000	5244.8138	-334.6753	538.1475		667.6425
F-15	813+92.5300	0.0000	5244.7060	-339.6644	540.5787		673.1925
F-16	813+98.0800	0.0000	5244.5983	-344.6759	542.9637		678.7425
F-17	814+03.6300	0.0000	5244.4905	-349.7091	545.3022		684.2925
F-18	814+09.1800	0.0000	5244.3828	-354.7638	547.5940		689.8425
F-19	814+14.7300	0.0000	5244.2750	-359.8395	549.8390		695.3925
CL PR 12G	814+20.2800	0.0000	5244.1672	-364.9357	552.0369	-931.4957	700.9425
F-1	814+24.7160	0.0000	5244.0811	-369.0235	553.7597		705.3785
F-2	814+29.1520	0.0000	5243.9950	-373.1239	555.4522		709.8145
F-3	814+33.5880	0.0000	5243.9089	-377.2367	557.1144		714.2505
F-4	814+38.0240	0.0000	5243.8227	-381.3617	558.7461		718.6865
F-5	814+42.4600	0.0000	5243.7366	-385.4986	560.3473		723.1225
F-6	814+46.8960	0.0000	5243.6505	-389.6472	561.9179		727.5585
F-7	814+51.3320	0.0000	5243.5644	-393.8074	563.4577		731.9945
F-8	814+55.7680	0.0000	5243.4782	-397.9788	564.9667		736.4305
F-9	814+60.2040	0.0000	5243.3921	-402.1613	566.4449		740.8665
F-10	814+64.6400	0.0000	5243.3060	-406.3546	567.8921		745.3025
F-11	814+69.0760	0.0000	5243.2199	-410.5585	569.3082		749.7385
F-12	814+73.5120	0.0000	5243.1337	-414.7727	570.6933		754.1745
F-13	814+77.9480	0.0000	5243.0479	-418.9970	572.0471		758.6105
F-14	814+82.3840	0.0000	5242.9634	-423.2313	573.3697		763.0465
F-15	814+86.8200	0.0000	5242.8804	-427.4752	574.6609		767.4825
F-16	814+91.2560	0.0000	5242.7987	-431.7285	575.9207		771.9185
F-17	814+95.6920	0.0000	5242.7185	-435.9911	577.1491		776.3545
F-18	815+00.1280	0.0000	5242.6397	-440.2626	578.3459		780.7905
F-19	815+04.5640	0.0000	5242.5623	-444.5428	579.5110		785.2265
CL ABT 13G	815+09.0000	0.0000	5242.4864	-448.8315	580.6445	-1781.4487	789.6625
BF ABT 13G	815+11.7500	0.0000	5242.4400	-451.4944	581.3313	-1792.0178	792.4125

WEB 2

BENT LINE DESCRIPTION OR FRACTIONAL POINT DESIGNATION	STATION	OFFSET	ELEVATION	OFFSET X	ORDINATE Y	BENT LINE LENGTH FROM Y-AXIS OR OFFSET FROM EXTERIOR GIRDER	GIRDER LINE LENGTH
P.C.C.	807+19.3375	2.9765	5256.8981	2.9765	.0000	2.9765	0.0000
F-12	807+25.2019	2.9767	5256.8799	2.9479	5.8934		5.8935
F-13	807+31.1220	2.9770	5256.8568	2.8607	11.8422		11.8431
F-14	807+37.0422	2.9772	5256.8291	2.7147	17.7899		17.7926
F-15	807+42.9623	2.9775	5256.7966	2.5102	23.7359		23.7422
F-16	807+48.8825	2.9778	5256.7595	2.2470	29.6796		29.6918
F-17	807+54.8026	2.9782	5256.7178	1.9251	35.6204		35.6413
F-18	807+60.7228	2.9785	5256.6717	1.5447	41.5577		41.5909
F-19	807+66.6429	2.9788	5256.6210	1.1057	47.4910		47.5405
BK BG 7G	807+72.5616	2.9791	5256.5658	.6083	53.4183	.7865	53.4886
CL PR 7G	807+74.6660	2.9792	5256.5451	.4173	55.5245	.5396	55.6035
AH BG 7G	807+76.7655	2.9794	5256.5239	.2195	57.6251	.2838	57.7133
F-1	807+80.9722	2.9796	5256.4797	-.1990	61.8319		61.9409
F-2	807+85.1789	2.9798	5256.4331	-.6471	66.0357		66.1686
F-3	807+89.3857	2.9800	5256.3843	-1.1246	70.2363		70.3962
F-4	807+93.5924	2.9802	5256.3333	-1.6315	74.4334		74.6238
F-5	807+97.7991	2.9804	5256.2799	-2.1679	78.6268		78.8515
F-6	808+02.0058	2.9806	5256.2244	-2.7337	82.8164		83.0791
F-7	808+06.2126	2.9808	5256.1667	-3.3288	87.0019		87.3067
F-8	808+10.4193	2.9810	5256.1068	-3.9533	91.1832		91.5343
F-9	808+14.6260	2.9811	5256.0448	-4.6071	95.3599		95.7620
F-10	808+18.8327	2.9812	5255.9805	-5.2902	99.5320		99.9896
F-11	808+23.0395	2.9813	5255.9141	-6.0026	103.6991		104.2172
F-12	808+27.2462	2.9814	5255.8454	-6.7441	107.8612		108.4449
F-13	808+31.4529	2.9815	5255.7746	-7.5149	112.0180		112.6725
F-14	808+35.6596	2.9815	5255.7016	-8.3148	116.1692		116.9001
F-15	808+39.8664	2.9815	5255.6264	-9.1438	120.3148		121.1277
F-16	808+44.0731	2.9815	5255.5490	-10.0018	124.4544		125.3554
F-17	808+48.2798	2.9815	5255.4694	-10.8889	128.5879		129.5830
F-18	808+52.4865	2.9815	5255.3880	-11.8049	132.7151		133.8106
F-19	808+56.6933	2.9815	5255.3063	-12.7499	136.8358		138.0383
CL PR 8G	808+60.9000	2.9815	5255.2246	-13.7237	140.9497	-14.1147	142.2659
F-1	808+67.7750	2.9815	5255.0911	-15.3772	147.6581		149.1750
F-2	808+74.6500	2.9815	5254.9576	-17.1074	154.3470		156.0842
F-3	808+81.5250	2.9815	5254.8242	-18.9142	161.0157		162.9934
F-4	808+88.4000	2.9815	5254.6907	-20.7973	167.6633		169.9025
F-5	808+95.2750	2.9815	5254.5572	-22.7564	174.2888		176.8117
F-6	809+02.1500	2.9815	5254.4237	-24.7913	180.8915		183.7208
F-7	809+09.0250	2.9815	5254.2902	-26.9018	187.4704		190.6300
F-8	809+15.9000	2.9815	5254.1568	-29.0874	194.0247		197.5392
F-9	809+22.7750	2.9815	5254.0233	-31.3481	200.5535		204.4483
F-10	809+29.6500	2.9815	5253.8898	-33.6834	207.0560		211.3575
F-11	809+36.5250	2.9815	5253.7563	-36.0930	213.5313		218.2666
F-12	809+43.4000	2.9815	5253.6228	-38.5767	219.9786		225.1758
F-13	809+50.2750	2.9815	5253.4894	-41.1341	226.3970		232.0850
F-14	809+57.1500	2.9815	5253.3559	-43.7648	232.7857		238.9941
F-15	809+64.0250	2.9815	5253.2224	-46.4686	239.1438		245.9033
F-16	809+70.9000	2.9815	5253.0889	-49.2451	245.4705		252.8124
F-17	809+77.7750	2.9815	5252.9554	-52.0939	251.7650		259.7216
F-18	809+84.6500	2.9815	5252.8220	-55.0146	258.0264		266.6308
F-19	809+91.5250	2.9815	5252.6885	-58.0068	264.2540		273.5399
CL PR 9G	809+98.4000	2.9815	5252.5550	-61.0703	270.4468	-68.3285	280.4491
F-1	810+07.0370	2.9815	5252.3873	-65.0190	278.1764		289.1290
F-2	810+15.6740	2.9815	5252.2196	-69.0787	285.8484		297.8089
F-3	810+24.3110	2.9815	5252.0519	-73.2483	293.4611		306.4888
F-4	810+32.9480	2.9815	5251.8842	-77.5271	301.0130		315.1687
F-5	810+41.5850	2.9815	5251.7165	-81.9142	308.5026		323.8487

BENT LINE DESCRIPTION OR FRACTIONAL POINT DESIGNATION	STATION	OFFSET	ELEVATION	COORDINATES FROM LAYOUT LINE: X	COORDINATES FROM LAYOUT LINE: ORDINATE Y	BENT LINE LENGTH FROM Y-AXIS OR OFFSET FROM EXTERIOR GIRDER	GIRDER LINE LENGTH
F-6	810+50.2220	2.9815	5251.5488	-86.4086	315.9282		332.5286
F-7	810+58.8590	2.9815	5251.3812	-91.0095	323.2884		341.2085
F-8	810+67.4960	2.9815	5251.2135	-95.7158	330.5815		349.8884
F-9	810+76.1330	2.9815	5251.0458	-100.5266	337.8062		358.5683
F-10	810+84.7700	2.9815	5250.8781	-105.4409	344.9609		367.2482
F-11	810+93.4070	2.9815	5250.7104	-110.4577	352.0441		375.9281
F-12	811+02.0440	2.9815	5250.5427	-115.5759	359.0543		384.6081
F-13	811+10.6810	2.9815	5250.3750	-120.7945	365.9902		393.2880
F-14	811+19.3180	2.9815	5250.2073	-126.1124	372.8502		401.9679
F-15	811+27.9550	2.9815	5250.0396	-131.5285	379.6329		410.6478
F-16	811+36.5920	2.9815	5249.8719	-137.0416	386.3370		419.3277
F-17	811+45.2290	2.9815	5249.7043	-142.6507	392.9610		428.0076
F-18	811+53.8660	2.9815	5249.5366	-148.3546	399.5036		436.6875
F-19	811+62.5030	2.9815	5249.3689	-154.1520	405.9635		445.3675
CL PR 10G	811+71.1400	2.9815	5249.2012	-160.0419	412.3392	-219.3443	454.0474
F-1	811+78.0470	2.9815	5249.0671	-164.8176	417.3764		460.9887
F-2	811+84.9540	2.9815	5248.9330	-169.6511	422.3583		467.9300
F-3	811+91.8610	2.9815	5248.7989	-174.5415	427.2842		474.8713
F-4	811+98.7680	2.9815	5248.6648	-179.4883	432.1535		481.8127
F-5	812+05.6750	2.9815	5248.5307	-184.4909	436.9656		488.7540
F-6	812+12.5820	2.9815	5248.3966	-189.5485	441.7197		495.6953
F-7	812+19.4890	2.9815	5248.2625	-194.6605	446.4153		502.6366
F-8	812+26.3960	2.9815	5248.1284	-199.8263	451.0518		509.5779
F-9	812+33.3030	2.9815	5247.9943	-205.0450	455.6285		516.5192
F-10	812+40.2100	2.9815	5247.8602	-210.3161	460.1448		523.4606
F-11	812+47.1170	2.9815	5247.7261	-215.6389	464.6001		530.4019
F-12	812+54.0240	2.9815	5247.5920	-221.0125	468.9939		537.3432
F-13	812+60.9310	2.9815	5247.4579	-226.4364	473.3255		544.2845
F-14	812+67.8380	2.9815	5247.3238	-231.9098	477.5943		551.2258
F-15	812+74.7450	2.9815	5247.1896	-237.4320	481.7999		558.1672
F-16	812+81.6520	2.9815	5247.0555	-243.0022	485.9417		565.1085
F-17	812+88.5590	2.9815	5246.9214	-248.6197	490.0190		572.0498
F-18	812+95.4660	2.9815	5246.7873	-254.2838	494.0314		578.9911
F-19	813+02.3730	2.9815	5246.6532	-259.9937	497.9784		585.9324
CL PR 11G	813+09.2800	2.9815	5246.5191	-265.7487	501.8593	-479.4045	592.8738
F-1	813+14.8300	2.9815	5246.4114	-270.4051	504.9297		598.4513
F-2	813+20.3800	2.9815	5246.3036	-275.0898	507.9568		604.0289
F-3	813+25.9300	2.9815	5246.1959	-279.8022	510.9404		609.6065
F-4	813+31.4800	2.9815	5246.0881	-284.5420	513.8803		615.1841
F-5	813+37.0300	2.9815	5245.9804	-289.3089	516.7763		620.7616
F-6	813+42.5800	2.9815	5245.8726	-294.1023	519.6280		626.3392
F-7	813+48.1300	2.9815	5245.7649	-298.9218	522.4353		631.9168
F-8	813+53.6800	2.9815	5245.6571	-303.7672	525.1979		637.4944
F-9	813+59.2300	2.9815	5245.5493	-308.6379	527.9156		643.0719
F-10	813+64.7800	2.9815	5245.4416	-313.5335	530.5880		648.6495
F-11	813+70.3300	2.9815	5245.3338	-318.4536	533.2151		654.2271
F-12	813+75.8800	2.9815	5245.2261	-323.3978	535.7966		659.8047
F-13	813+81.4300	2.9815	5245.1183	-328.3657	538.3322		665.3822
F-14	813+86.9800	2.9815	5245.0106	-333.3568	540.8217		670.9598
F-15	813+92.5300	2.9815	5244.9028	-338.3708	543.2650		676.5374
F-16	813+98.0800	2.9815	5244.7951	-343.4071	545.6618		682.1150
F-17	814+03.6300	2.9815	5244.6873	-348.4654	548.0119		687.6925
F-18	814+09.1800	2.9815	5244.5795	-353.5452	550.3151		693.2701
F-19	814+14.7300	2.9815	5244.4718	-358.6460	552.5713		698.8477
CL PR 12G	814+20.2800	2.9815	5244.3640	-363.7676	554.7801	-928.5141	704.4253
F-1	814+24.7160	2.9815	5244.2779	-367.8757	556.5115		708.8833
F-2	814+29.1520	2.9815	5244.1918	-371.9965	558.2124		713.3414
F-3	814+33.5880	2.9815	5244.1057	-376.1297	559.8829		717.7994
F-4	814+38.0240	2.9815	5244.0195	-380.2752	561.5227		722.2574
F-5	814+42.4600	2.9815	5243.9334	-384.4327	563.1318		726.7155
F-6	814+46.8960	2.9815	5243.8473	-388.6020	564.7102		731.1735
F-7	814+51.3320	2.9815	5243.7611	-392.7828	566.2577		735.6316
F-8	814+55.7680	2.9815	5243.6750	-396.9749	567.7742		740.0896
F-9	814+60.2040	2.9815	5243.5889	-401.1782	569.2597		744.5476
F-10	814+64.6400	2.9815	5243.5028	-405.3923	570.7141		749.0057
F-11	814+69.0760	2.9815	5243.4166	-409.6171	572.1373		753.4637
F-12	814+73.5120	2.9815	5243.3305	-413.8522	573.5292		757.9218
F-13	814+77.9480	2.9815	5243.2447	-418.0976	574.8898		762.3798
F-14	814+82.3840	2.9815	5243.1602	-422.3529	576.2189		766.8379
F-15	814+86.8200	2.9815	5243.0772	-426.6179	577.5165		771.2959
F-16	814+91.2560	2.9815	5242.9955	-430.8923	578.7826		775.7539
F-17	814+95.6920	2.9815	5242.9153	-435.1761	580.0171		780.2120
F-18	815+00.1280	2.9815	5242.8365	-439.4688	581.2198		784.6700
F-19	815+04.5640	2.9815	5242.7591	-443.7703	582.3908		789.1281
CL ABT 13G	815+09.0000	2.9815	5242.6832	-448.0803	583.5299	-1778.4671	793.5861
BF ABT 13G	815+11.7364	2.9815	5242.6370	-450.7432	584.2167	-1789.0363	796.3361

NOTES:

Elevations are at top of Concrete Deck 0.1667 feet below finished grade.

Coordinates and girder line lengths are with respect to Back Tangent Curve G-2.

Bridge deck elevations, coordinates and lengths are for placing and construction of concrete deck only.

This information shall not be used for fabrication of steel box girders.

Refer to Framing Plans for Steel Fabrication Dimensions.

REVISIONS

DeLeuw, Cather & Company Denver, CO.

DIVISION OF HIGHWAYS

BRIDGE DECK ELEVATIONS

Designer	J. Stapleton	Structure Numbers	F-16-OL
Detailer	S. Shibao		

Drawing Number B-54 of 57 Drawings

Revision Dates (Preliminary Stage Only)

INITIAL	DATE	
DESIGNED BY J.L.S.	5-88	CHECKED BY
CHECKED BY B.A.A.	5-88	QUANTITIES BY
DETAILED BY S.S.	5-88	CHECKED BY

UD1:[100,3]208DECK2.DGN;1
UDA1:[PLOTS]D3.PRF
DATE 10-MAY-1988 - TIME 11:28

STATE OF COLORADO
STATE DEPARTMENT OF HIGHWAYS
DIVISION OF HIGHWAYS:
D.O.H. FORM NO. 126
REV. FEB. 1984

AS CONSTRUCTED

NO REVISIONS ☐ REVISED ☐ VOID ☐

FED. ROAD REGION	DIVISION	PROJ. NO.	SHEET NO.	SHEET TOTALS
VIII	COLO.	IR25-2(208)	145	

WEB 3

BENT LINE DESCRIPTION OR FRACTIONAL POINT DESIGNATION	STATION	OFFSET	ELEVATION	COORDINATES FROM LAYOUT LINE: OFFSET X	COORDINATES FROM LAYOUT LINE: ORDINATE Y	BENT LINE LENGTH FROM Y-AXIS OR OFFSET FROM EXTERIOR GIRDER	GIRDER LINE LENGTH
P.C.C.	807+19.3375	10.0235	5257.4227	10.0235	.0000	10.0235	0.0000
F-11	807+21.6990	10.0234	5257.4151	10.0187	2.4009		2.4009
F-12	807+27.8730	10.0232	5257.3914	9.9614	8.6777		8.6780
F-13	807+34.0469	10.0229	5257.3621	9.8396	14.9536		14.9550
F-14	807+40.2209	10.0226	5257.3273	9.6532	21.2280		21.2321
F-15	807+46.3949	10.0223	5257.2868	9.4021	27.5000		27.5092
F-16	807+52.5688	10.0220	5257.2413	9.0866	33.7691		33.7862
F-17	807+58.7428	10.0216	5257.1909	8.7065	40.0347		40.0633
F-18	807+64.9168	10.0213	5257.1355	8.2620	46.2960		46.3404
F-19	807+71.0908	10.0210	5257.0753	7.7531	52.5524		52.6174
BK BG 7G	807+77.2659	10.0206	5257.0101	7.1797	58.8045	9.2832	58.8957
CL PR 7G	807+79.3350	10.0205	5256.9872	6.9732	60.8979	9.0162	60.9994
AH BG 7G	807+81.3994	10.0204	5256.9638	6.7600	62.9859	8.7405	63.0982
F-1	807+85.3744	10.0202	5256.9171	6.3292	67.0043		67.1396
F-2	807+89.3494	10.0200	5256.8684	5.8718	71.0197		71.1810
F-3	807+93.3244	10.0198	5256.8177	5.3077	75.0320		75.2224
F-4	807+97.2995	10.0196	5256.7650	4.8772	79.0410		79.2638
F-5	808+01.2745	10.0194	5256.7105	4.3401	83.0466		83.3052
F-6	808+05.2495	10.0192	5256.6543	3.7765	87.0485		87.3466
F-7	808+09.2246	10.0191	5256.5964	3.1864	91.0466		91.3880
F-8	808+13.1996	10.0189	5256.5367	2.5698	95.0407		95.4294
F-9	808+17.1746	10.0188	5256.4753	1.9268	99.0306		99.4708
F-10	808+21.1497	10.0187	5256.4121	1.2574	103.0162		103.5122
F-11	808+25.1247	10.0186	5256.3471	.5617	106.9972		107.5536
F-12	808+29.0997	10.0186	5256.2804	-.1604	110.9736		111.5950
F-13	808+33.0748	10.0185	5256.2120	-.9088	114.9451		115.6365
F-14	808+37.0498	10.0185	5256.1418	-1.6835	118.9116		119.6779
F-15	808+41.0248	10.0185	5256.0698	-2.4845	122.8728		123.7193
F-16	808+44.9999	10.0185	5255.9961	-3.3116	126.8286		127.7607
F-17	808+48.9749	10.0185	5255.9205	-4.1650	130.7789		131.8021
F-18	808+52.9499	10.0185	5255.8434	-5.0445	134.7235		135.8435
F-19	808+56.9250	10.0185	5255.7662	-5.9501	138.6621		139.8849
CL PR 8G	808+60.9000	10.0185	5255.6890	-6.8817	142.5946	-7.0778	143.9263
F-1	808+67.7750	10.0185	5255.5556	-8.5545	149.3813		150.9161
F-2	808+74.6500	10.0185	5255.4221	-10.3050	156.1483		157.9059
F-3	808+81.5250	10.0185	5255.2886	-12.1328	162.8948		164.8957
F-4	808+88.4000	10.0185	5255.1551	-14.0379	169.6200		171.8855
F-5	808+95.2750	10.0185	5255.0216	-16.0199	176.3228		178.8753
F-6	809+02.1500	10.0185	5254.8882	-18.0785	183.0025		185.8651
F-7	809+09.0250	10.0185	5254.7547	-20.2136	189.6582		192.8549
F-8	809+15.9000	10.0185	5254.6212	-22.4248	196.2890		199.8447
F-9	809+22.7750	10.0185	5254.4877	-24.7118	202.8940		206.8345
F-10	809+29.6500	10.0185	5254.3542	-27.0743	209.4724		213.8243
F-11	809+36.5250	10.0185	5254.2208	-29.5121	216.0233		220.8141
F-12	809+43.4000	10.0185	5254.0873	-32.0248	222.5458		227.8039
F-13	809+50.2750	10.0185	5253.9538	-34.6120	229.0391		234.7937
F-14	809+57.1500	10.0185	5253.8203	-37.2735	235.5023		241.7835
F-15	809+64.0250	10.0185	5253.6868	-40.0088	241.9346		248.7733
F-16	809+70.9000	10.0185	5253.5534	-42.8177	248.3352		255.7631
F-17	809+77.7750	10.0185	5253.4199	-45.6997	254.7031		262.7529
F-18	809+84.6500	10.0185	5253.2864	-48.6545	261.0376		269.7427
F-19	809+91.5250	10.0185	5253.1529	-51.6817	267.3379		276.7325
CL PR 9G	809+98.4000	10.0185	5253.0194	-54.7809	273.6030	-61.2916	283.7223
F-1	810+07.0370	10.0185	5252.8517	-58.7757	281.4228		292.5035
F-2	810+15.6740	10.0185	5252.6840	-62.8827	289.1843		301.2847
F-3	810+24.3110	10.0185	5252.5164	-67.1011	296.8859		310.0659
F-4	810+32.9480	10.0185	5252.3487	-71.4298	304.5259		318.8472
F-5	810+41.5850	10.0185	5252.1810	-75.8681	312.1029		327.6284
F-6	810+50.2220	10.0185	5252.0133	-80.4149	319.6152		336.4096
F-7	810+58.8590	10.0185	5251.8456	-85.0695	327.0612		345.1908
F-8	810+67.4960	10.0185	5251.6779	-89.8307	334.4395		353.9720
F-9	810+76.1330	10.0185	5251.5102	-94.6976	341.7485		362.7533
F-10	810+84.7700	10.0185	5251.3425	-99.6693	348.9066		371.5345
F-11	810+93.4070	10.0185	5251.1748	-104.7446	356.1525		380.3157
F-12	811+02.0440	10.0185	5251.0071	-109.9226	363.2446		389.0969
F-13	811+10.6810	10.0185	5250.8394	-115.2021	370.2613		397.8781
F-14	811+19.3180	10.0185	5250.6718	-120.5820	377.2014		406.6594
F-15	811+27.9550	10.0185	5250.5041	-126.0613	384.0633		415.4406
F-16	811+36.5920	10.0185	5250.3364	-131.6388	390.8456		424.2218
F-17	811+45.2290	10.0185	5250.1687	-137.3134	397.5470		433.0030
F-18	811+53.8660	10.0185	5250.0010	-143.0838	404.1659		441.7842
F-19	811+62.5030	10.0185	5249.8333	-148.9489	410.7011		450.5655
CL PR 10G	811+71.1400	10.0185	5249.6656	-154.9075	417.1512	-212.3074	459.3467
F-1	811+78.0470	10.0185	5249.5315	-159.7390	422.2472		466.3690
F-2	811+84.9540	10.0185	5249.3974	-164.6288	427.2873		473.3913
F-3	811+91.8610	10.0185	5249.2633	-169.5763	432.2707		480.4137
F-4	811+98.7680	10.0185	5249.1292	-174.5809	437.1969		487.4360
F-5	812+05.6750	10.0185	5248.9951	-179.6418	442.0651		494.4583
F-6	812+12.5820	10.0185	5248.8610	-184.7585	446.8747		501.4807
F-7	812+19.4890	10.0185	5248.7269	-189.9302	451.6251		508.5030
F-8	812+26.3960	10.0185	5248.5928	-195.1562	456.3156		515.5253
F-9	812+33.3030	10.0185	5248.4587	-200.4358	460.9457		522.5477
F-10	812+40.2100	10.0185	5248.3246	-205.7684	465.5147		529.5700
F-11	812+47.1170	10.0185	5248.1905	-211.1533	470.0221		536.5923
F-12	812+54.0240	10.0185	5248.0564	-216.5897	474.4671		543.6147
F-13	812+60.9310	10.0185	5247.9223	-222.0769	478.8493		550.6370
F-14	812+67.8380	10.0185	5247.7882	-227.6141	483.1680		557.6593
F-15	812+74.7450	10.0185	5247.6541	-233.2008	487.4226		564.6817
F-16	812+81.6520	10.0185	5247.5200	-238.8360	491.6127		571.7040
F-17	812+88.5590	10.0185	5247.3859	-244.5191	495.7376		578.7263
F-18	812+95.4660	10.0185	5247.2518	-250.2493	499.7969		585.7487
F-19	813+02.3730	10.0185	5247.1177	-256.0258	503.7899		592.7710
CL PR 11G	813+09.2800	10.0185	5246.9836	-261.8479	507.7161	-472.3676	599.7933
F-1	813+14.8300	10.0185	5246.8758	-266.5587	510.8223		605.4360
F-2	813+20.3800	10.0185	5246.7681	-271.2980	513.8847		611.0787
F-3	813+25.9300	10.0185	5246.6603	-276.0654	516.9032		616.7214
F-4	813+31.4800	10.0185	5246.5526	-280.8606	519.8774		622.3640
F-5	813+37.0300	10.0185	5246.4448	-285.6830	522.8072		628.0067
F-6	813+42.5800	10.0185	5246.3370	-290.5324	525.6922		633.6494
F-7	813+48.1300	10.0185	5246.2293	-295.4082	528.5322		639.2921
F-8	813+53.6800	10.0185	5246.1215	-300.3101	531.3271		644.9347
F-9	813+59.2300	10.0185	5246.0138	-305.2376	534.0764		650.5774
F-10	813+64.7800	10.0185	5245.9060	-310.1904	536.7801		656.2201
F-11	813+70.3300	10.0185	5245.7983	-315.1679	539.4378		661.8627
F-12	813+75.8800	10.0185	5245.6905	-320.1698	542.0494		667.5054
F-13	813+81.4300	10.0185	5245.5828	-325.1957	544.6146		673.1481
F-14	813+86.9800	10.0185	5245.4750	-330.2450	547.1332		678.7908
F-15	813+92.5300	10.0185	5245.3672	-335.3175	549.6050		684.4334
F-16	813+98.0800	10.0185	5245.2595	-340.4126	552.0298		690.0761
F-17	814+03.6300	10.0185	5245.1517	-345.5299	554.4073		695.7188
F-18	814+09.1800	10.0185	5245.0440	-350.6690	556.7374		701.3615
F-19	814+14.7300	10.0185	5244.9362	-355.8294	559.0199		707.0041
CL PR 12G	814+20.2800	10.0185	5244.8285	-361.0107	561.2545	-921.4772	712.6468
F-1	814+24.7160	10.0185	5244.7423	-365.1667	563.0061		717.1569
F-2	814+29.1520	10.0185	5244.6562	-369.3356	564.7269		721.6670
F-3	814+33.5880	10.0185	5244.5701	-373.5171	566.4168		726.1770
F-4	814+38.0240	10.0185	5244.4840	-377.7110	568.0758		730.6871
F-5	814+42.4600	10.0185	5244.3978	-381.9170	569.7037		735.1972
F-6	814+46.8960	10.0185	5244.3117	-386.1349	571.3005		739.7072
F-7	814+51.3320	10.0185	5244.2256	-390.3645	572.8660		744.2173
F-8	814+55.7680	10.0185	5244.1395	-394.6056	574.4002		748.7274
F-9	814+60.2040	10.0185	5244.0533	-398.8579	575.9031		753.2375
F-10	814+64.6400	10.0185	5243.9672	-403.1212	577.3744		757.7475
F-11	814+69.0760	10.0185	5243.8811	-407.3953	578.8142		762.2576
F-12	814+73.5120	10.0185	5243.7949	-411.6799	580.2224		766.7677
F-13	814+77.9480	10.0185	5243.7091	-415.9747	581.5988		771.2777
F-14	814+82.3840	10.0185	5243.6247	-420.2797	582.9435		775.7878
F-15	814+86.8200	10.0185	5243.5416	-424.5945	584.2563		780.2979
F-16	814+91.2560	10.0185	5243.4600	-428.9188	585.5371		784.8080
F-17	814+95.6920	10.0185	5243.3797	-433.2525	586.7860		789.3180
F-18	815+00.1280	10.0185	5243.3009	-437.5953	588.0027		793.8281
F-19	815+04.5640	10.0185	5243.2236	-441.9470	589.1874		798.3382
CL ABT 13G	815+09.0000	10.0185	5243.1476	-446.3074	590.3398	-1771.4302	802.8483
BF ABT 13G	815+11.7048	10.0185	5243.1020	-448.9702	591.0267	-1781.9993	805.5983

WEB 4

BENT LINE DESCRIPTION OR FRACTIONAL POINT DESIGNATION	STATION	OFFSET	ELEVATION	COORDINATES FROM LAYOUT LINE: OFFSET X	COORDINATES FROM LAYOUT LINE: ORDINATE Y	BENT LINE LENGTH FROM Y-AXIS OR OFFSET FROM EXTERIOR GIRDER	GIRDER LINE LENGTH
P.C.C.	807+19.3375	18.5000	5258.0537	18.5000	.0000	18.5000	0.0000
F-11	807+24.5230	18.5000	5258.0338	18.4769	5.3453		5.3454
F-12	807+30.9935	18.5000	5258.0028	18.3833	12.0146		12.0154
F-13	807+37.4640	18.5000	5257.9651	18.2178	18.6825		18.6854
F-14	807+43.9345	18.5000	5257.9206	17.9804	25.3483		25.3554
F-15	807+50.4050	18.5000	5257.8699	17.6711	32.0111		32.0254
F-16	807+56.8755	18.5000	5257.8139	17.2899	38.6701		38.6954
F-17	807+63.3459	18.5000	5257.7524	16.8370	45.3247		45.3654
F-18	807+69.8164	18.5000	5257.6855	16.3124	51.9740		52.0354
F-19	807+76.2869	18.5000	5257.6133	15.7161	58.6173		58.7054
BK BG 7G	807+82.7574	18.5000	5257.5356	15.0481	65.2537	19.4570	65.3754
CL PR 7G	807+84.7859	18.5000	5257.5102	14.8240	67.3327	19.1672	67.4664
AH BG 7G	807+86.8100	18.5000	5257.4842	14.5934	69.4064	18.8690	69.5529
F-1	807+90.5145	18.5000	5257.4354	14.1531	73.1997		73.3716
F-2	807+94.2190	18.5000	5257.3848	13.6895	76.9901		77.1903
F-3	807+97.9235	18.5000	5257.3327	13.2024	80.7776		81.0091
F-4	808+01.6280	18.5000	5257.2793	12.6920	84.5621		84.8278
F-5	808+05.3325	18.5000	5257.2245	12.1582	88.3433		88.6465
F-6	808+09.0370	18.5000	5257.1684	11.6011	92.1212		92.4652
F-7	808+12.7415	18.5000	5257.1110	11.0207	95.8955		96.2840
F-8	808+16.4460	18.5000	5257.0523	10.4170	99.6662		100.1027
F-9	808+20.1505	18.5000	5256.9923	9.7900	103.4331		103.9214
F-10	808+23.8550	18.5000	5256.9310	9.1398	107.1961		107.7401
F-11	808+27.5595	18.5000	5256.8684	8.4663	110.9549		111.5588
F-12	808+31.2640	18.5000	5256.8045	7.7697	114.7096		115.3776
F-13	808+34.9685	18.5000	5256.7392	7.0498	118.4598		119.1963
F-14	808+38.6730	18.5000	5256.6726	6.3069	122.2056		123.0150
F-15	808+42.3775	18.5000	5256.6048	5.5408	125.9467		126.8337
F-16	808+46.0820	18.5000	5256.5355	4.7517	129.6829		130.6525
F-17	808+49.7865	18.5000	5256.4646	3.9395	133.4143		134.4712
F-18	808+53.4910	18.5000	5256.3927	3.1042	137.1405		138.2899
F-19	808+57.1955	18.5000	5256.3208	2.2460	140.8616		142.1086
CL PR 8G	808+60.9000	18.5000	5256.2488	1.3648	144.5772	1.4037	145.9273
F-1	808+67.7750	18.5000	5256.1153	-.3312	151.4582		153.0143
F-2	808+74.6500	18.5000	5255.9819	-2.1060	158.3193		160.1013
F-3	808+81.5250	18.5000	5255.8484	-3.9593	165.1597		167.1883
F-4	808+88.4000	18.5000	5255.7149	-5.8908	171.9783		174.2753
F-5	808+95.2750	18.5000	5255.5814	-7.9004	178.7744		181.3622
F-6	809+02.1500	18.5000	5255.4479	-9.9877	185.5470		188.4492
F-7	809+09.0250	18.5000	5255.3145	-12.1524	192.2952		195.5362
F-8	809+15.9000	18.5000	5255.1810	-14.3943	199.0182		202.6232
F-9	809+22.7750	18.5000	5255.0475	-16.7131	205.7150		209.7102
F-10	809+29.6500	18.5000	5254.9140	-19.1085	212.3849		216.7971
F-11	809+36.5250	18.5000	5254.7805	-21.5802	219.0268		223.8841
F-12	809+43.4000	18.5000	5254.6471	-24.1278	225.6400		230.9711
F-13	809+50.2750	18.5000	5254.5136	-26.7510	232.2236		238.0581
F-14	809+57.1500	18.5000	5254.3801	-29.4495	238.7767		245.1451
F-15	809+64.0250	18.5000	5254.2466	-32.2228	245.2984		252.2320
F-16	809+70.9000	18.5000	5254.1131	-35.0708	251.7880		259.3190
F-17	809+77.7750	18.5000	5253.9797	-37.9928	258.2445		266.4060
F-18	809+84.6500	18.5000	5253.8462	-40.9887	264.6670		273.4930
F-19	809+91.5250	18.5000	5253.7127	-44.0580	271.0549		280.5799
CL PR 9G	809+98.4000	18.5000	5253.5792	-47.2003	277.4071	-52.8100	287.6669
F-1	810+07.0370	18.5000	5253.4115	-51.2507	285.3356		296.5702
F-2	810+15.6740	18.5000	5253.2438	-55.4148	293.2050		305.4735
F-3	810+24.3110	18.5000	5253.0761	-59.6918	301.0137		314.3768
F-4	810+32.9480	18.5000	5252.9084	-64.0807	308.7600		323.2802
F-5	810+41.5850	18.5000	5252.7408	-68.5806	316.4423		332.1835
F-6	810+50.2220	18.5000	5252.5731	-73.1907	324.0590		341.0868
F-7	810+58.8590	18.5000	5252.4054	-77.9100	331.6086		349.9901
F-8	810+67.4960	18.5000	5252.2377	-82.7374	339.0895		358.8934
F-9	810+76.1330	18.5000	5252.0700	-87.6720	346.5001		367.7967
F-10	810+84.7700	18.5000	5251.9023	-92.7128	353.8389		376.7000
F-11	810+93.4070	18.5000	5251.7346	-97.8587	361.1044		385.6033
F-12	811+02.0440	18.5000	5251.5669	-103.1086	368.2950		394.5066
F-13	811+10.6810	18.5000	5251.3992	-108.4616	375.4094		403.4099
F-14	811+19.3180	18.5000	5251.2315	-113.9163	382.4459		412.3132
F-15	811+27.9550	18.5000	5251.0639	-119.4718	389.4032		421.2165
F-16	811+36.5920	18.5000	5250.8962	-125.1268	396.2799		430.1198
F-17	811+45.2290	18.5000	5250.7285	-130.8803	403.0744		439.0232
F-18	811+53.8660	18.5000	5250.5608	-136.7310	409.7853		447.9265
F-19	811+62.5030	18.5000	5250.3931	-142.6776	416.4114		456.8298
CL PR 10G	811+71.1400	18.5000	5250.2254	-148.7190	422.9512	-203.8258	465.7331
F-1	811+78.0470	18.5000	5250.0913	-153.6177	428.1181		472.8530
F-2	811+84.9540	18.5000	5249.9572	-158.5755	433.2282		479.9730
F-3	811+91.8610	18.5000	5249.8231	-163.5918	438.2809		487.0930
F-4	811+98.7680	18.5000	5249.6890	-168.6660	443.2755		494.2129
F-5	812+05.6750	18.5000	5249.5549	-173.7973	448.2114		501.3329
F-6	812+12.5820	18.5000	5249.4208	-178.9851	453.0879		508.4529
F-7	812+19.4890	18.5000	5249.2867	-184.2286	457.9044		515.5728
F-8	812+26.3960	18.5000	5249.1526	-189.5273	462.6602		522.6928
F-9	812+33.3030	18.5000	5249.0185	-194.8804	467.3546		529.8128
F-10	812+40.2100	18.5000	5248.8844	-200.2871	471.9871		536.9327
F-11	812+47.1170	18.5000	5248.7503	-205.7469	476.5571		544.0527
F-12	812+54.0240	18.5000	5248.6162	-211.2588	481.0640		551.1727
F-13	812+60.9310	18.5000	5248.4821	-216.8223	485.5071		558.2926
F-14	812+67.8380	18.5000	5248.3480	-222.4366	489.8858		565.4126
F-15	812+74.7450	18.5000	5248.2139	-228.1009	494.1996		572.5326
F-16	812+81.6520	18.5000	5248.0798	-233.8145	498.4480		579.6525
F-17	812+88.5590	18.5000	5247.9457	-239.5766	502.6303		586.7725
F-18	812+95.4660	18.5000	5247.8116	-245.3864	506.7459		593.8925
F-19	813+02.3730	18.5000	5247.6775	-251.2433	510.7945		601.0124
CL PR 11G	813+09.2800	18.5000	5247.5434	-257.1464	514.7753	-463.8860	608.1324
F-1	813+14.8300	18.5000	5247.4356	-261.9226	517.9246		613.8535
F-2	813+20.3800	18.5000	5247.3278	-266.7278	521.0296		619.5746
F-3	813+25.9300	18.5000	5247.2201	-271.5615	524.0901		625.2958
F-4	813+31.4800	18.5000	5247.1123	-276.4234	527.1057		631.0169
F-5	813+37.0300	18.5000	5247.0046	-281.3129	530.0762		636.7380
F-6	813+42.5800	18.5000	5246.8968	-286.2296	533.0013		642.4591
F-7	813+48.1300	18.5000	5246.7891	-291.1732	535.8808		648.1803
F-8	813+53.6800	18.5000	5246.6813	-296.1433	538.7145		653.9014
F-9	813+59.2300	18.5000	5246.5736	-301.1393	541.5021		659.6225
F-10	813+64.7800	18.5000	5246.4658	-306.1609	544.2434		665.3436
F-11	813+70.3300	18.5000	5246.3580	-311.2077	546.9380		671.0648
F-12	813+75.8800	18.5000	5246.2503	-316.2791	549.5859		676.7859
F-13	813+81.4300	18.5000	5246.1425	-321.3749	552.1868		682.5070
F-14	813+86.9800	18.5000	5246.0348	-326.4944	554.7404		688.2281
F-15	813+92.5300	18.5000	5245.9270	-331.6374	557.2466		693.9493
F-16	813+98.0800	18.5000	5245.8193	-336.8034	559.7051		699.6704
F-17	814+03.6300	18.5000	5245.7115	-341.9918	562.1157		705.3915
F-18	814+09.1800	18.5000	5245.6038	-347.2023	564.4781		711.1126
F-19	814+14.7300	18.5000	5245.4960	-352.4345	566.7923		716.8338
CL PR 12G	814+20.2800	18.5000	5245.3882	-357.6879	569.0580	-912.9957	722.5549
F-1	814+24.7160	18.5000	5245.3021	-361.9017	570.8340		727.1277
F-2	814+29.1520	18.5000	5245.2160	-366.1285	572.5787		731.7004
F-3	814+33.5880	18.5000	5245.1299	-370.3681	574.2921		736.2732
F-4	814+38.0240	18.5000	5245.0437	-374.6203	575.9742		740.8460
F-5	814+42.4600	18.5000	5244.9576	-378.8848	577.6247		745.4188
F-6	814+46.8960	18.5000	5244.8715	-383.1614	579.2437		749.9916
F-7	814+51.3320	18.5000	5244.7854	-387.4498	580.8310		754.5643
F-8	814+55.7680	18.5000	5244.6992	-391.7498	582.3866		759.1371
F-9	814+60.2040	18.5000	5244.6131	-396.0613	583.9103		763.7099
F-10	814+64.6400	18.5000	5244.5270	-400.3839	585.4021		768.2827
F-11	814+69.0760	18.5000	5244.4409	-404.7173	586.8619		772.8554
F-12	814+73.5120	18.5000	5244.3547	-409.0615	588.2897		777.4282
F-13	814+77.9480	18.5000	5244.2689	-413.4161	589.6852		782.0010
F-14	814+82.3840	18.5000	5244.1844	-417.7809	591.0486		786.5738
F-15	814+86.8200	18.5000	5244.1014	-422.1557	592.3796		791.1465
F-16	814+91.2560	18.5000	5244.0197	-426.5401	593.6783		795.7193
F-17	814+95.6920	18.5000	5243.9395	-430.9341	594.9445		800.2921
F-18	815+00.1280	18.5000	5243.8607	-435.3373	596.1782		804.8649
F-19	815+04.5640	18.5000	5243.7833	-439.7495	597.3793		809.4377
CL ABT 13G	815+09.0000	18.5000	5243.7074	-444.1705	598.5477	-1762.9487	814.0104
BF ABT 13G	815+11.6678	18.5000	5243.6624	-446.8333	599.2347	-1773.5177	816.7604

RIGHT EDGE DECK

BENT LINE DESCRIPTION OR FRACTIONAL POINT DESIGNATION	STATION	OFFSET	ELEVATION	COORDINATES FROM LAYOUT LINE: X	COORDINATES FROM LAYOUT LINE: ORDINATE Y	BENT LINE LENGTH FROM Y-AXIS OR OFFSET FROM EXTERIOR GIRDER	GIRDER LINE LENGTH
P.C.C.	807+19.3375	23.5000	5258.4258	23.5000	.0000	23.5000	0.0000
F-10	807+19.5026	23.5000	5258.4252	23.5000	.1716		.1716
F-11	807+26.1434	23.5000	5258.3971	23.4599	7.0723		7.0725
F-12	807+32.7842	23.5000	5258.3614	23.3434	13.9722		13.9734
F-13	807+39.4250	23.5000	5258.3182	23.1506	20.8704		20.8743
F-14	807+46.0658	23.5000	5258.2675	22.8814	27.7660		27.7752
F-15	807+52.7066	23.5000	5258.2106	22.5360	34.6582		34.6761
F-16	807+59.3474	23.5000	5258.1480	22.1143	41.5461		41.5770
F-17	807+65.9882	23.5000	5258.0798	21.6163	48.4290		48.4778
F-18	807+72.6290	23.5000	5258.0056	21.0423	55.3060		55.3787
F-19	807+79.2698	23.5000	5257.9262	20.3921	62.1761		62.2796
BK BG 7G	807+85.9106	23.5000	5257.8409	19.6660	69.0387	25.4278	69.1805
CL PR 7G	807+87.9160	23.5000	5257.8140	19.4318	71.1094	25.1249	71.2645
AH BG 7G	807+89.9171	23.5000	5257.7867	19.1911	73.1749	24.8138	73.3439
F-1	807+93.4662	23.5000	5257.7369	18.7475	76.8363		77.0321
F-2	807+97.0154	23.5000	5257.6857	18.2821	80.4950		80.7203
F-3	808+00.5645	23.5000	5257.6334	17.7952	84.1508		84.4084

NOTES:

Elevations are at top of Concrete Deck 0.1667 feet below finished grade.

Coordinates and girder line lengths are with respect to Back Tangent Curve G-2.

Bridge deck elevations, coordinates and lengths are for placing and construction of concrete deck only.

This information shall not be used for fabrication of steel box girders.

Refer to Framing Plans for Steel Fabrication Dimensions.

REVISIONS

DESIGNED BY	J.J.S.	5-88
CHECKED BY	B.A.A.	5-88
DETAILED BY	S.S.	5-88

CHECKED BY / QUANTITIES BY / CHECKED BY

DeLeuw, Cather & Company Denver, CO.

DIVISION OF HIGHWAYS

BRIDGE DECK ELEVATIONS

Designer J. Stapleton
Detailer S. Shibao
Structure Numbers F-16-OL

Drawing Number B-55 of 57 Drawings

Revision Dates (Preliminary Stage Only)

UD1:[100.3]208DECK2.DGN;1
UDAI:[PLOTS]D5.PRF
DATE 10-MAY-1988 - TIME 13:32

STATE OF COLORADO
STATE DEPARTMENT OF HIGHWAYS
DIVISION OF HIGHWAYS:
D. O. H. FORM NO. 126:
REV. FEB. 1984

AS CONSTRUCTED		
NO REVISIONS ☐	REVISED ☐	VOID ☐

FED. ROAD REGION	DIVISION	PROJ. NO.	SHEET NO.	SHEET TOTALS
VIII	COLO.	IR25-2(208)	146	

BENT LINE DESCRIPTION OR FRACTIONAL POINT DESIGNATION	STATION	OFFSET	ELEVATION		COORDINATES FROM LAYOUT LINE: OFFSET X	COORDINATES FROM LAYOUT LINE: ORDINATE Y	BENT LINE LENGTH FROM Y-AXIS OR OFFSET FROM EXTERIOR GIRDER	GIRDER LINE LENGTH
F-4	808+04.1137	23.5000	5257.5799		17.2866	87.8037		88.0966
F-5	808+07.6628	23.5000	5257.5254		16.7564	91.4536		91.7847
F-6	808+11.2120	23.5000	5257.4698		16.2047	95.1002		95.4729
F-7	808+14.7611	23.5000	5257.4131		15.6314	98.7435		99.1610
F-8	808+18.3102	23.5000	5257.3554		15.0365	102.3834		102.8492
F-9	808+21.8594	23.5000	5257.2965		14.4201	106.0197		106.5373
F-10	808+25.4085	23.5000	5257.2365		13.7822	109.6522		110.2255
F-11	808+28.9577	23.5000	5257.1755		13.1229	113.2810		113.9136
F-12	808+32.5068	23.5000	5257.1133		12.4421	116.9057		117.6018
F-13	808+36.0560	23.5000	5257.0501		11.7398	120.5264		121.2900
F-14	808+39.6051	23.5000	5256.9858		11.0162	124.1429		124.9781
F-15	808+43.1543	23.5000	5256.9204		10.2712	127.7550		128.6663
F-16	808+46.7034	23.5000	5256.8538		9.5048	131.3626		132.3544
F-17	808+50.2526	23.5000	5256.7856		8.7171	134.9657		136.0426
F-18	808+53.8017	23.5000	5256.7166		7.9081	138.5640		139.7307
F-19	808+57.3509	23.5000	5256.6477		7.0778	142.1575		143.4189
CL PR 8G	808+60.9000	23.5000	5256.5788		6.2263	145.7460	6.4037	147.1070
F-1	808+67.7750	23.5000	5256.4453		4.5166	152.6826		154.2513
F-2	808+74.6500	23.5000	5256.3119		2.7274	159.5992		161.3956
F-3	808+81.5250	23.5000	5256.1784		.8591	166.4948		168.5398
F-4	808+88.4000	23.5000	5256.0449		-1.0880	173.3686		175.6841
F-5	808+95.2750	23.5000	5255.9114		-3.1138	180.2196		182.8284
F-6	809+02.1500	23.5000	5255.7779		-5.2179	187.0469		189.9727
F-7	809+09.0250	23.5000	5255.6445		-7.4002	193.8497		197.1169
F-8	809+15.9000	23.5000	5255.5110		-9.6602	200.6270		204.2612
F-9	809+22.7750	23.5000	5255.3775		-11.9978	207.3780		211.4055
F-10	809+29.6500	23.5000	5255.2440		-14.4126	214.1018		218.5497
F-11	809+36.5250	23.5000	5255.1105		-16.9042	220.7975		225.6940
F-12	809+43.4000	23.5000	5254.9771		-19.4724	227.4641		232.8383
F-13	809+50.2750	23.5000	5254.8436		-22.1168	234.1009		239.9826
F-14	809+57.1500	23.5000	5254.7101		-24.8371	240.7070		247.1268
F-15	809+64.0250	23.5000	5254.5766		-27.6329	247.2815		254.2711
F-16	809+70.9000	23.5000	5254.4431		-30.5038	253.8235		261.4154
F-17	809+77.7750	23.5000	5254.3097		-33.4495	260.3321		268.5596
F-18	809+84.6500	23.5000	5254.1762		-36.4696	266.8066		275.7039
F-19	809+91.5250	23.5000	5254.0427		-39.5637	273.2461		282.8482
CL PR 9G	809+98.4000	23.5000	5253.9092		-42.7314	279.6497	-47.8100	289.9924
F-1	810+07.0370	23.5000	5253.7415		-46.8145	287.6423		298.9677
F-2	810+15.6740	23.5000	5253.5738		-51.0123	295.5753		307.9430
F-3	810+24.3110	23.5000	5253.4061		-55.3239	303.4471		316.9183
F-4	810+32.9480	23.5000	5253.2384		-59.7483	311.2560		325.8936
F-5	810+41.5850	23.5000	5253.0708		-64.2846	319.0004		334.8689
F-6	810+50.2220	23.5000	5252.9031		-68.9320	326.6787		343.8441
F-7	810+58.8590	23.5000	5252.7354		-73.6894	334.2893		352.8194
F-8	810+67.4960	23.5000	5252.5677		-78.5558	341.8307		361.7947
F-9	810+76.1330	23.5000	5252.4000		-83.5303	349.3012		370.7700
F-10	810+84.7700	23.5000	5252.2323		-88.6119	356.6993		379.7453
F-11	810+93.4070	23.5000	5252.0646		-93.7994	364.0236		388.7206
F-12	811+02.0440	23.5000	5251.8969		-99.0917	371.2723		397.6958
F-13	811+10.6810	23.5000	5251.7292		-104.4879	378.4442		406.6711
F-14	811+19.3180	23.5000	5251.5615		-109.9868	385.5376		415.6464
F-15	811+27.9550	23.5000	5251.3939		-115.5872	392.5512		424.6217
F-16	811+36.5920	23.5000	5251.2262		-121.2879	399.4834		433.5970
F-17	811+45.2290	23.5000	5251.0585		-127.0879	406.3328		442.5723
F-18	811+53.8660	23.5000	5250.8908		-132.9859	413.0981		451.5475
F-19	811+62.5030	23.5000	5250.7231		-138.9806	419.7777		460.5228
CL PR 10G	811+71.1400	23.5000	5250.5554		-145.0708	426.3704	-198.8258	469.4981
F-1	811+78.0470	23.5000	5250.4213		-150.0091	431.5790		476.6756
F-2	811+84.9540	23.5000	5250.2872		-155.0070	436.7304		483.8531
F-3	811+91.8610	23.5000	5250.1531		-160.0639	441.8240		491.0307
F-4	811+98.7680	23.5000	5250.0190		-165.1790	446.8590		498.2082
F-5	812+05.6750	23.5000	5249.8849		-170.3518	451.8348		505.3857
F-6	812+12.5820	23.5000	5249.7508		-175.5816	456.7507		512.5632
F-7	812+19.4890	23.5000	5249.6167		-180.8675	461.6061		519.7408
F-8	812+26.3960	23.5000	5249.4826		-186.2090	466.4003		526.9183
F-9	812+33.3030	23.5000	5249.3485		-191.6054	471.1327		534.0958
F-10	812+40.2100	23.5000	5249.2144		-197.0558	475.8027		541.2733
F-11	812+47.1170	23.5000	5249.0803		-202.5597	480.4097		548.4509
F-12	812+54.0240	23.5000	5248.9462		-208.1162	484.9529		555.6284
F-13	812+60.9310	23.5000	5248.8121		-213.7247	489.4319		562.8059
F-14	812+67.8380	23.5000	5248.6780		-219.3843	493.8461		569.9834
F-15	812+74.7450	23.5000	5248.5439		-225.0944	498.1948		577.1610
F-16	812+81.6520	23.5000	5248.4098		-230.8542	502.4775		584.3385
F-17	812+88.5590	23.5000	5248.2757		-236.6629	506.6936		591.5160
F-18	812+95.4660	23.5000	5248.1416		-242.5197	510.8425		598.6935
F-19	813+02.3730	23.5000	5248.0075		-248.4239	514.9238		605.8711
CL PR 11G	813+09.2800	23.5000	5247.8734		-254.3747	518.9368	-458.8860	613.0486
F-1	813+14.8300	23.5000	5247.7656		-259.1096	522.1116		618.8160
F-2	813+20.3800	23.5000	5247.6578		-264.0336	525.2417		624.5833
F-3	813+25.9300	23.5000	5247.5501		-268.9064	528.3269		630.3507
F-4	813+31.4800	23.5000	5247.4423		-273.8075	531.3668		636.1181
F-5	813+37.0300	23.5000	5247.3346		-278.7366	534.3613		641.8855
F-6	813+42.5800	23.5000	5247.2268		-283.6931	537.3101		647.6528
F-7	813+48.1300	23.5000	5247.1191		-288.6767	540.2129		653.4202
F-8	813+53.6800	23.5000	5247.0113		-293.6869	543.0695		659.1876
F-9	813+59.2300	23.5000	5246.9036		-298.7233	545.8796		664.9550
F-10	813+64.7800	23.5000	5246.7958		-303.7855	548.6431		670.7223
F-11	813+70.3300	23.5000	5246.6880		-308.8731	551.3595		676.4897
F-12	813+75.8800	23.5000	5246.5803		-313.9855	554.0288		682.2571
F-13	813+81.4300	23.5000	5246.4725		-319.1224	556.6507		688.0245
F-14	813+86.9800	23.5000	5246.3648		-324.2834	559.2250		693.7918
F-15	813+92.5300	23.5000	5246.2570		-329.4680	561.7514		699.5592
F-16	813+98.0800	23.5000	5246.1493		-334.6757	564.2298		705.3266
F-17	814+03.6300	23.5000	5246.0415		-339.9061	566.6598		711.0940
F-18	814+09.1800	23.5000	5245.9338		-345.1587	569.0414		716.8613
F-19	814+14.7300	23.5000	5245.8260		-350.4332	571.3743		722.6287
CL PR 12G	814+20.2800	23.5000	5245.7182		-355.7290	573.6584	-907.9957	728.3961
F-1	814+24.7160	23.5000	5245.6321		-359.9769	575.4486		733.0058
F-2	814+29.1520	23.5000	5245.5460		-364.2379	577.2075		737.6156
F-3	814+33.5880	23.5000	5245.4599		-368.5118	578.9347		742.2253
F-4	814+38.0240	23.5000	5245.3737		-372.7983	580.6304		746.8351
F-5	814+42.4600	23.5000	5245.2876		-377.0973	582.2943		751.4448
F-6	814+46.8960	23.5000	5245.2015		-381.4084	583.9263		756.0545
F-7	814+51.3320	23.5000	5245.1154		-385.7315	585.5265		760.6643
F-8	814+55.7680	23.5000	5245.0292		-390.0663	587.0946		765.2740
F-9	814+60.2040	23.5000	5244.9431		-394.4126	588.6307		769.8838
F-10	814+64.6400	23.5000	5244.8570		-398.7701	590.1345		774.4935
F-11	814+69.0760	23.5000	5244.7709		-403.1387	591.6062		779.1033
F-12	814+73.5120	23.5000	5244.6847		-407.5179	593.0454		783.7130
F-13	814+77.9480	23.5000	5244.5989		-411.9077	594.4523		788.3227
F-14	814+82.3840	23.5000	5244.5144		-416.3078	595.8267		792.9325
F-15	814+86.8200	23.5000	5244.4314		-420.7180	597.1685		797.5422
F-16	814+91.2560	23.5000	5244.3497		-425.1379	598.4776		802.1520
F-17	814+95.6920	23.5000	5244.2695		-429.5674	599.7541		806.7617
F-18	815+00.1280	23.5000	5244.1907		-434.0062	600.9977		811.3715
F-19	815+04.5640	23.5000	5244.1133		-438.4540	602.2085		815.9812
CL ABT 13G	815+09.0000	23.5000	5244.0374		-442.9107	603.3864	-1757.9487	820.5909
BF ABT 13G	815+11.6464	23.5000	5243.9927		-445.5736	604.0734	-1768.5176	823.3410

BENT LINE DESCRIPTION OR FRACTIONAL POINT DESIGNATION	STATION	OFFSET	ELEVATION		COORDINATES FROM LAYOUT LINE: X	COORDINATES FROM LAYOUT LINE: ORDINATE Y	BENT LINE LENGTH FROM Y-AXIS OR OFFSET FROM EXTERIOR GIRDER	GIRDER LINE LENGTH

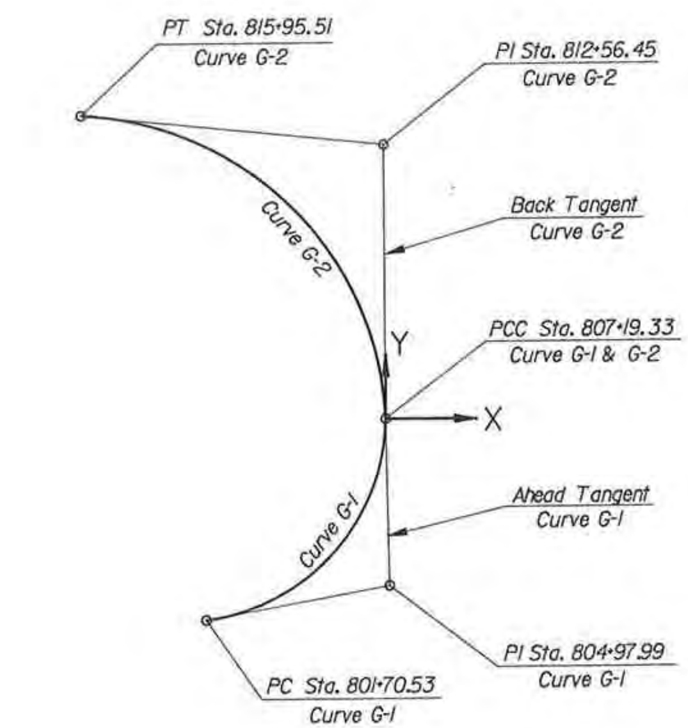

ORIGIN OF THE
COORDINATE AXES FOR
BRIDGE GEOMETRY

NOTES:
Elevations are at top of Concrete Deck 0.1667 feet below finished grade.

Coordinates and girder line lengths are with respect to Back Tangent Curve G-2.

Bridge deck elevations, coordinates and lengths are for placing and construction of concrete deck only.

This information shall not be used for fabrication of steel box girders.

Refer to Framing Plans for Steel Fabrication Dimensions.

REVISIONS		

DeLeuw, Cather & Company Denver, CO.

DIVISION OF HIGHWAYS

BRIDGE DECK ELEVATIONS

Designer	J. Stapleton	Structure Numbers	F-16-0L
Detailer	S. Shibao		

Drawing Number B-56 of 57 Drawings

Revision Dates (Preliminary Stage Only)

DESIGNED BY		INITIAL	DATE	CHECKED BY
CHECKED BY		J.L.S.	5-88	QUANTITIES BY
DETAILED BY		B.A.A.	5-88	CHECKED BY
		S.S.	5-88	

UD1:[100,3]208DECK2.DGN;1
UDA1:[PLOTS]D6.PRF
DATE 10-MAY-1988 - TIME 14:53

STATE OF COLORADO
STATE DEPARTMENT OF HIGHWAYS
DIVISION OF HIGHWAYS
D. O. H. FORM NO. 126
REV. FEB. 1984

ROADWAY APPROACHES

ELEVATIONS ARE AT FINISHED GRADE

AS CONSTRUCTED		
NO REVISIONS ☐	REVISED ☐	VOID ☐

FED. ROAD REGION	DIVISION	PROJ. NO.	SHEET NO.	SHEET TOTALS
VIII	COLO.	IR25-2(208)	147	

REVISIONS		

STATION	FACE LEFT BRIDGE RAIL -9.00' TO -6.07	PROFILE GRADE LINE 0.0'	LANE 16.00' TO 14.11'	FACE RIGHT BRIDGE RAIL 22.00' TO 20.11'
815+10	5242.04	5242.64	5243.69	5244.09
+20	41.88	42.47	43.53	43.92
+30	41.72	42.31	43.37	43.77
+40	41.57	42.16	43.22	43.61
815+50	5241.42	5242.02	5243.07	5243.47
+60	41.30	41.88	42.92	43.30
+70	41.20	41.75	42.74	43.11
+80	41.10	41.63	42.57	42.92
+90	41.02	41.52	42.40	42.74
816+00	5240.94	5241.41	5242.24	5242.56
+10	40.88	41.31	42.09	42.38
+20	40.82	41.21	41.94	42.22
+30	40.77	41.13	41.80	42.06
+40	40.72	41.05	41.67	41.91
816+50	5240.68	5240.98	5241.55	5241.77
+60	40.65	40.91	41.43	41.64
+70	40.62	40.86	41.32	41.51
+80	40.60	40.81	41.22	41.39
+90	40.58	40.76	41.12	41.27
817+00	5240.55	5240.71	5241.02	5241.15
+10	40.53	40.66	40.93	41.04
+20	40.50	40.61	40.83	40.92
+30	40.47	40.56	40.73	40.81
+40	40.45	40.51	40.64	40.70
+50	40.42	40.46	40.54	40.58

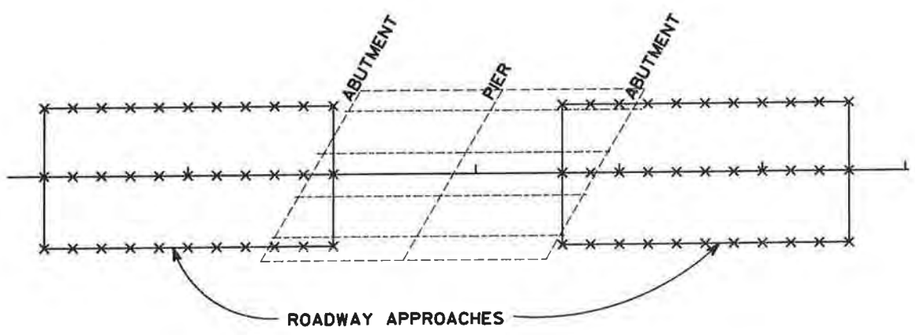

*TANGENT ALIGNMENT

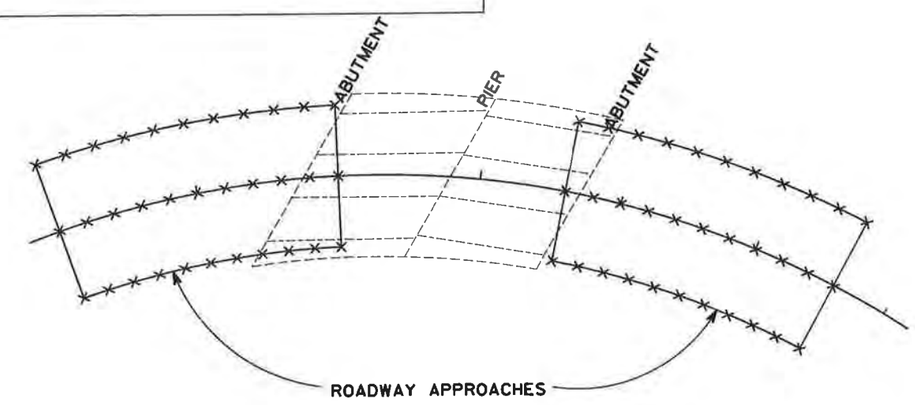

*HORIZONTAL CURVE ALIGNMENT

*THESE DRAWINGS ARE SCHEMATICS ONLY AND DO NOT NECESSARILY REFLECT THE ACTUAL BRIDGE LAYOUT.

	INITIAL	DATE
DESIGNED BY	J.L.S.	1-87
CHECKED BY	J.A.B.	2-88
DETAILED BY	S.S.	11-87
CHECKED BY		
QUANTITIES BY		
CHECKED BY		

DeLeuw, Cather & Company Denver, CO.

DIVISION OF HIGHWAYS

ROADWAY APPROACHES

Designer J. Stapleton
Detailer S. Shibao
Structure Numbers F-16-OL
Drawing Number B-57 of 57 Drawings

Revision Dates (Preliminary Stage Only)

STATE OF COLORADO
STATE DEPARTMENT OF HIGHWAYS
DIVISION OF HIGHWAYS:
D. O. H. FORM NO. 117:
REV. OCT. 1983:

AS CONSTRUCTED			
NO REVISIONS	REVISED	VOID	

FED. ROAD REGION	DIVISION	PROJ. NO.	SHEET NO.	TOTAL SHEETS
VIII	COLO.	IR 25-2(208)	148	

REVISIONS

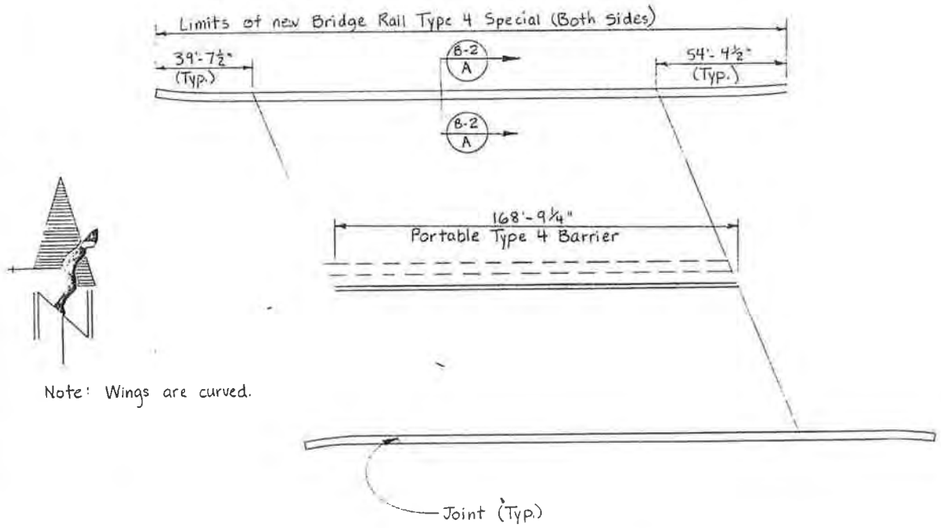

Note: Wings are curved.

PLAN
(Structure No F-16-DU)

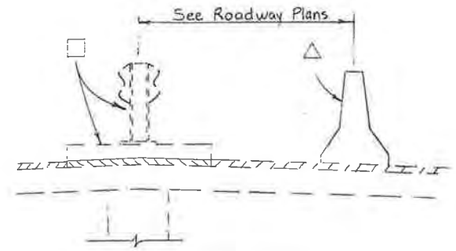

MEDIAN SECTION
(Structure No. F-16-DU)

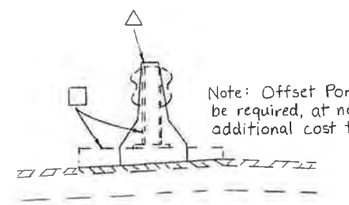

Note: Offset Portable Type 4 Barrier may be required, at no additional cost to project.

MEDIAN SECTION
(Structure No. F-16-EJ)

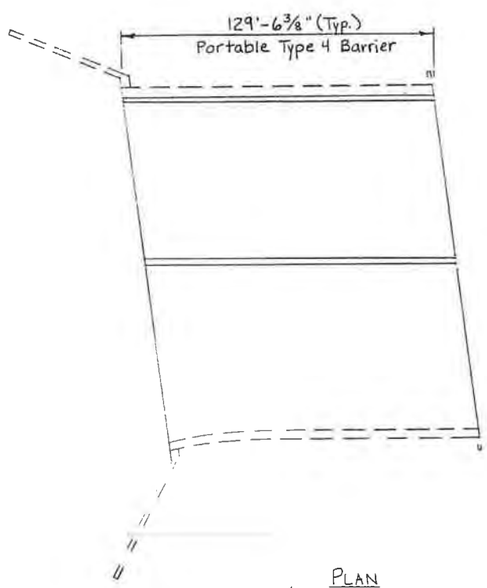

PLAN
(Structure No. F-16-EJ)

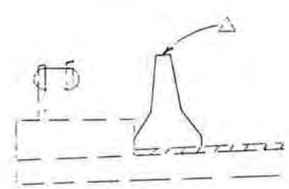

NORTH SIDE SECTION ONLY
(Structure No. F-16-EJ)

□ - to be removed. Existing rebar to be cut off 1" below the surface of the concrete deck. The resulting cavity shall be filled with mortar and left smooth and sound. Work to be included in Item 202- Removal of Portions of Present Structure.

△ - portable Type 4 barrier

General Notes

ALL WORK SHALL BE DONE ACCORDING TO THE STANDARD SPECIFICATIONS OF THE DIVISION OF HIGHWAYS, STATE OF COLORADO, APPLICABLE TO THE PROJECT.

DIMENSIONS CONTAINED IN THESE PLANS ARE CALCULATED FROM THE "AS CONSTRUCTED PLANS." THESE DIMENSIONS MAY BE ADJUSTED TO MEET THE EXISTING STRUCTURE. THE CONTRACTOR SHALL VERIFY ALL DEPENDENT DIMENSIONS IN THE FIELD BEFORE ORDERING OR FABRICATING ANY MATERIAL.

DRAWINGS REFLECT THE FINISHED CONDITION AND NOT THE EXISTING CONDITIONS. ALL WORK TO GET TO FINISHED PRODUCT WILL BE INCLUDED IN THE COST.

GRADE 60 REINFORCING STEEL IS REQUIRED.

THE REMOVAL OF EXISTING CURB, INCLUDING RAIL, TAKING CARE NOT TO DAMAGE DECK, AND REPAIR OF ASPHALT DAMAGED DURING REMOVAL, SHALL BE INCLUDED IN ITEM 202-REMOVAL OF PORTIONS OF PRESENT STRUCTURE.

SEE ROADWAY PLANS FOR DETAILS AND LOCATIONS OF PORTABLE TYPE 4 BARRIERS.

Summary Of Quantities

Item No.	Unit	Description	F-16-DU	F-16-EJ	Total
202	L. S.	Removal of Portions of Present Structure	1	1	1
606	Lin. Ft.	Bridge Rail Type 4 Special	526		526

INITIAL	DATE	CHECKED BY	MC	1-88
DESIGNED BY	GLP	1-88	QUANTITIES BY	
CHECKED BY	MC	1-88	CHECKED BY	
DETAILED BY	GLP	1-88		

DIVISION OF HIGHWAYS

BRIDGE RAIL & BARRIERS
(Structure F-16-DU And F-16-EJ)
Layout

DESIGNER B. Pinkerton	STRUCTURE NUMBERS	F-16-DU	
DETAILER B. Pinkerton		F-16-EJ	
DRAWING NUMBER B 1	OF 2	DRAWINGS	

REVISION DATES (PRELIMINARY STAGE ONLY)

STATE OF COLORADO
STATE DEPARTMENT OF HIGHWAYS
DIVISION OF HIGHWAYS
D.O.H. FORM NO. 117
REV. APR. 1988

AS CONSTRUCTED		
NO REVISIONS	REVISED	VOID

FEDERAL ROAD REGION NO.	DIVISION	PROJECT NUMBER	SHEET NUMBER
8	COLORADO	IR 25-2(208)	149

REVISIONS		

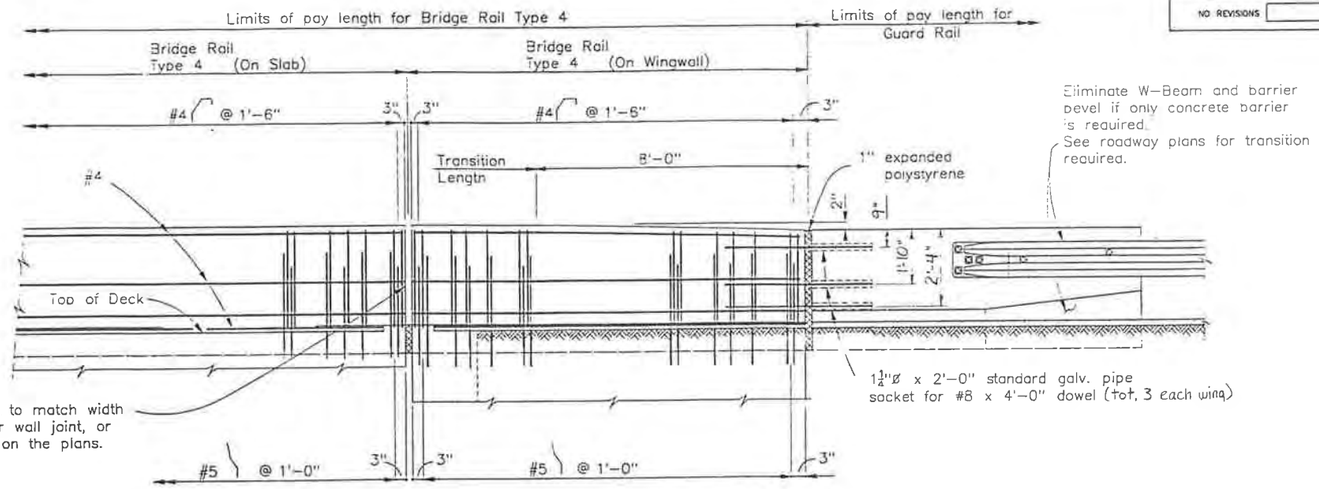

Eliminate W-Beam and barrier bevel if only concrete barrier is required.
See roadway plans for transition required.

ELEVATION

TRANSITION TO CONNECT BRIDGE RAIL TYPE 4 TO GUARD RAIL

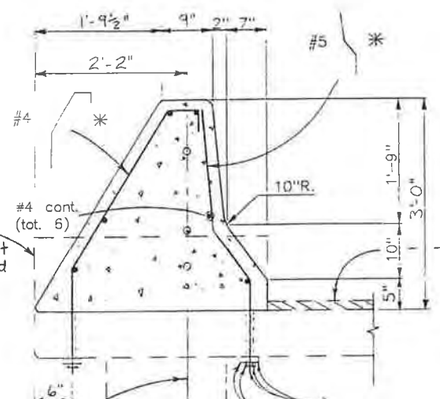

Removal of existing curb● taking care not to damage deck, and repair of asphalt damaged during removal, shall be included in item 202 - Removal of Portions of Present Structure.

● including rail

℄ #8 dowel (End of wings only)

℄ 2¼" x 5/16 x 2¼" and lockwasher and nut (Typ.)

SECTION B-1 / A

△ to be painted with one coat of zinc-rich paint, as directed by the Engineer (typ). Cost to be included in Item 606-Bridge Rail Type 4 Special.

* SUPERSTRUCTURE SLAB CONNECTIONS
Thread last 6" of bar. Core 1" ø holes through deck and set bar with an approved epoxy grout, full depth of slab.
WINGWALL CONNECTIONS
Bars to be set in 1'-0" deep 1" ø cored holes with an approved epoxy grout.
NOTE:
The coring of holes into the concrete and the epoxy grout to be included in item 606-Bridge Rail Type 4 Special.

NOTES:

All bridge rail concrete shall be Class D.

Longitudinal reinforcement shall stop at all expansion joints.

Bridge rail shall be constructed plumb.

Bridge rail concrete (Class D) and bridge rail reinforcement shall be included in Item No. 606, Bridge Rail Type 4 Special.

For Guard Rail Type 4, see Std. M-606-12 for details.

For Guard Rail Type 3, see Std. M-606-12 for details of transition and attachment to concrete barrier. See Std. M-606-1 for details of Guard Rail.

DESIGN DATA

Reinforced Concrete:

Class D Concrete: f_c= 1,800 psi, n = 8
Reinforcing Steel: f_s= 24,000 psi

INFORMATION ONLY

Description	Unit	Per Lin.Ft.
Concrete Class D	Cu. Yd.	0.21
Reinforcing Steel (Epoxy)	Lb.	13.8

	INITIAL	DATE	
Designed By	BLP	1-88	Checked By MLC 1-88
Checked By	MLC	1-88	Quantities By
Detailed By	BLP	1-88	Checked By

DIVISION OF HIGHWAYS

BRIDGE RAIL & BARRIERS
(Structure F-16-DU And F-16-EJ)
Bridge Rail Type 4 Special

Designer B. Pinkerton	Structure Numbers	F-16-DU
Detailer B. Pinkerton		
Drawing Number B 2 of 2		Drawings

Revision Dates (Preliminary Stage Only)
9/87

08/19/87 BRIDGE1::(HR ADMIN2/HRDGS105)HSG04

DETAILS FOR CAST IN PLACE CONCRETE BARRIER

STANDARD M-606-12

(SHEET 1 OF 9)

FEDERAL ROAD REGION NO.	DIVISION	PROJ. NO.	SHEET NO.	TOTAL SHEETS
VIII	COLORADO			

REVISIONS	

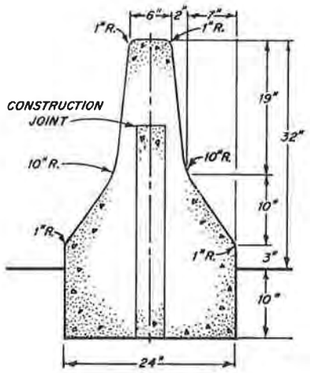

STYLE CA

MONOLITHIC BARRIER

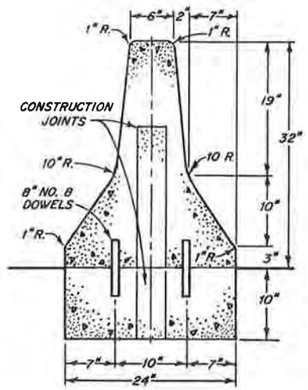

STYLE CA (OPT.)

TWO PIECE DOWELLED BARRIER

(OPTIONAL)

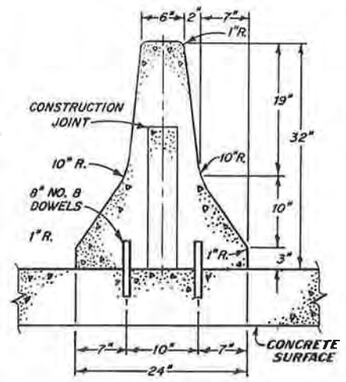

STYLE CC

BARRIER DOWELLED TO CONCRETE SURFACE

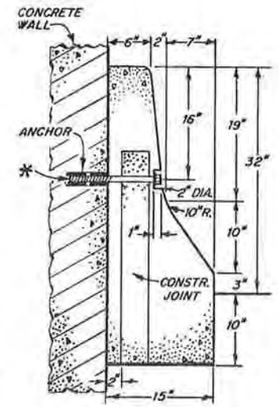

STYLE CD

BARRIER AGAINST WALL

* 3/4" DIA. x 12" LONG GALVANIZED ANCHOR BOLT AND WASHER, MECHANICALLY FASTENED AT 2'-6" CTRS.; USE ONLY WHEN CALLED FOR ON PLANS.

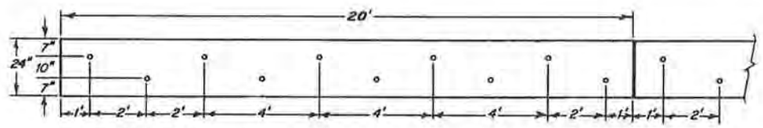

DOWEL PLACEMENT LAYOUT

(FOR STYLE CA (OPT.) OR CC BARRIERS)

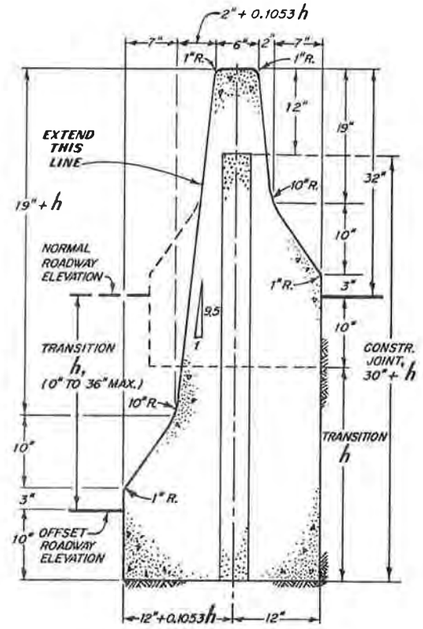

STYLE CE

BARRIER FOR OFFSET ROADWAYS

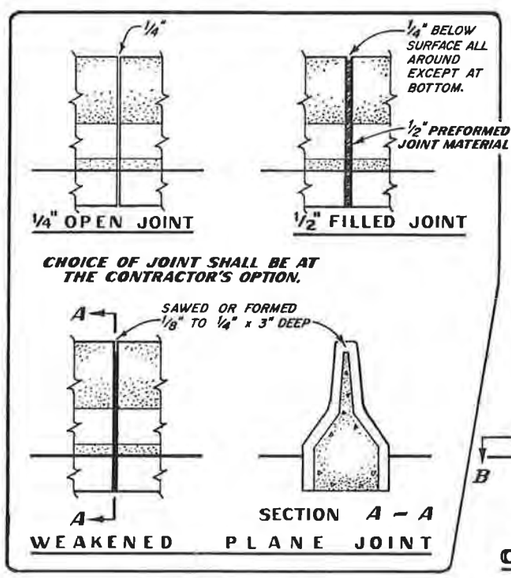

TYPICAL TRANSVERSE JOINTS

REQUIRED AT 20 FT. INTERVALS FOR ALL STYLES OF CAST IN PLACE BARRIER

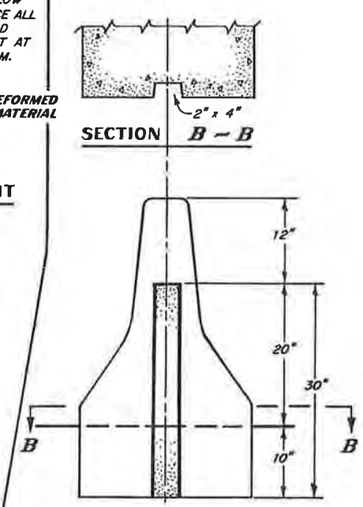

CONSTRUCTION JOINT

SHALL BE USED AT THE END OF A DAYS POUR OR AFTER 30 MIN. INTERRUPTION.

GENERAL NOTES

ALL WORK SHALL BE DONE IN ACCORDANCE WITH THE STANDARD SPECIFICATIONS APPLICABLE TO THE PROJECT.

CONCRETE SHALL BE CLASS **A**, **B** OR **D**.

PAVEMENT SHALL BE PATCHED ALONG THE BARRIER FOUNDATION TO MATCH EXISTING ASPHALT SURFACE.

TYPE 4 BARRIER MAY BE CAST IN PLACE OR PRECAST UNLESS A SPECIFIC STYLE OF BARRIER IS SPECIFIED ON THE PLAN.

DOWEL BARS MAY BE PLACED IN WET CONCRETE OR GROUTED IN HOLES DRILLED IN EXISTING CONCRETE.

ALL INCIDENTAL WORK AND MATERIALS SUCH AS DOWELS, GROUT, ANCHORS, BOLTS, PINS, JOINT MATERIAL, EXCAVATION FOR BASE, ETC. SHALL BE INCLUDED IN THE COST OF BARRIER.

PRECAST BARRIER:

ALL EXPOSED LOOPS SHALL BE THOROUGHLY CLEANED AND PAINTED IN ACCORDANCE WITH SECTION 509.

NUTS, WASHERS, LIFTING HARDWARE, CONNECTING PINS, DRIFT PINS AND ANCHOR BOLTS SHALL BE GALVANIZED.

TRIANGULAR SPACE IN BASE OF BARRIER IS TYPICAL, CIRCULAR ARC OR RECTANGULAR SHAPE WILL BE PERMITTED.

DRAINAGE SLOTS MAY BE OMITTED ON:

1. MEDIAN INSTALLATION WITH INLET DRAINAGE.
2. SHOULDER BARRIER ON HIGH EDGE OF SUPERELEVATED SHOULDER.
3. MEDIAN BARRIER ON CREST VERTICAL CURVE.
4. PERMANENT BARRIER.

STYLE **CE** BARRIER SHALL BE CAST IN PLACE UNLESS OTHERWISE PERMITTED.

THE JOINT BETWEEN CAST IN PLACE AND PERMANENT PRECAST BARRIER SHALL INCLUDE ALL RECESSES, LOOP REBARS AND PINS TO MAKE A PROPER MATCHING JOINT.

MIXING GUARD RAIL TYPES:

THIS STANDARD SHOWS THE DETAILS FOR VARIOUS USAGES OF GUARD RAIL, TYPE 4, CONCRETE BARRIER.

THE PLANS WILL INDICATE THE LOCATIONS ON THE PROJECT WHERE GUARD RAIL TYPES 3 OR 4 ARE REQUIRED.

WHEN GUARD RAIL, TYPE 3, W-BEAM IS TO BE USED AS AN END TREATMENT TO CONCRETE BARRIER OR AT A LOCATION SHOWN ON THE PLAN; REFER TO THE W-BEAM GUARD RAIL STANDARD FOR DETAILS.

WHEN BRIDGE RAIL IS DIFFERENT FROM ROADWAY RAIL, THE BRIDGE PLANS WILL SHOW THE CONNECTION DETAILS.

STATE DEPARTMENT OF HIGHWAYS
DIVISION OF HIGHWAYS
STATE OF COLORADO

GUARD RAIL-TYPE 4 CONCRETE BARRIER

APPROVED BY: K. R. Morris
STAFF DESIGN ENGINEER
DATE: FEBRUARY 18, 1983

STANDARD PLAN NO. M-606-12
SHEET 1 OF 9

STANDARD M-606-12
(SHEET 2)

FEDERAL ROAD REGION NO.	DIVISION	PROJ. NO.	SHEET NO.	TOTAL SHEETS
VIII	COLORADO			

REVISIONS		

DETAILS FOR CAST IN PLACE CONCRETE BARRIER (CONT'D.)

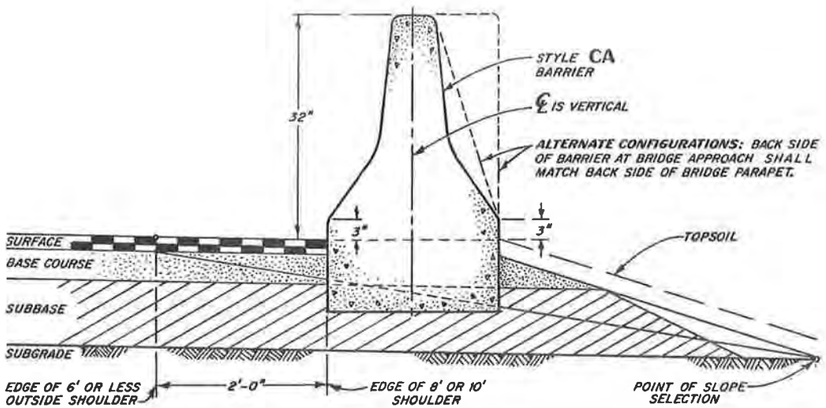

CAST IN PLACE BARRIER ON SHOULDER

NOTE: BACKFILL AND CAP WILL NOT BE PAID FOR SEPARATELY, BUT WILL BE INCLUDED IN THE COST OF THE BARRIER.

TREATMENT BETWEEN PIERS

TYPICAL FOR BOTH DETAILS BELOW

NOTE: USE 12' TRANSITION SECTION AT THE FOLLOWING LOCATIONS ONLY.

1. AT DOWNSTREAM END OF THE INSTALLATION, I.E. POINTED AWAY FROM APPROACHING TRAFFIC. (NOT TO BE USED ON 2 LANE-2 WAY ROADWAYS.)
2. AT INTERRUPTED MEDIAN CROSSOVERS. (SEE DETAIL ON SHEET 8.)
3. AT LOCATIONS OUTSIDE THE "CLEAR ZONE", (GENERALLY 30' OR MORE FROM TRAVEL LANES).

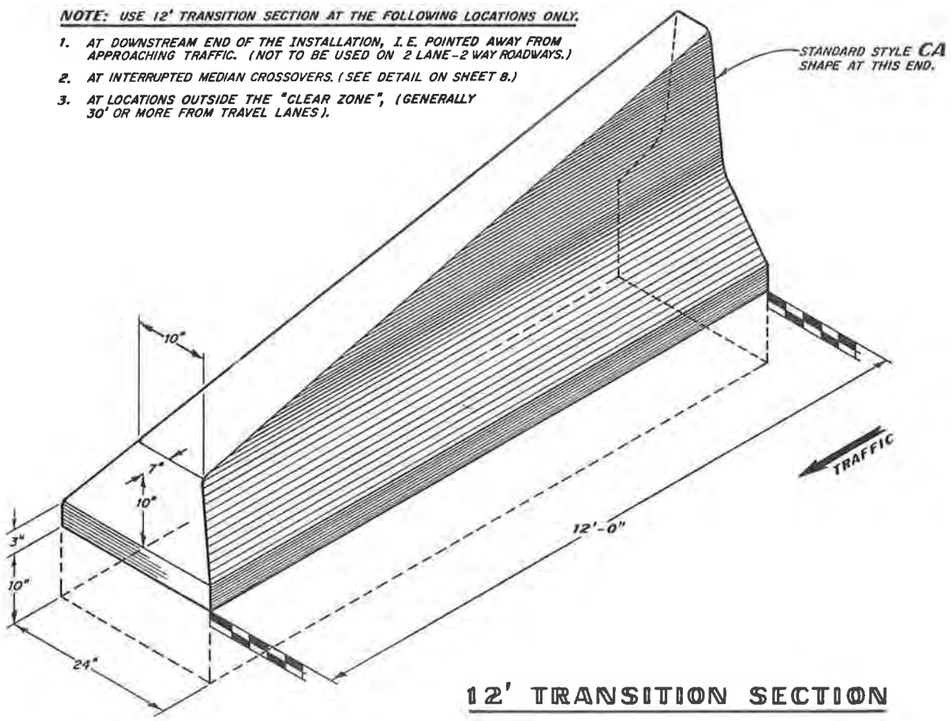

12' TRANSITION SECTION

TRANSITION TO PIER WIDER THAN 2 FT.

(THIS METHOD IS SUITABLE FOR EITHER CAST IN PLACE OR PRECAST BARRIER.)

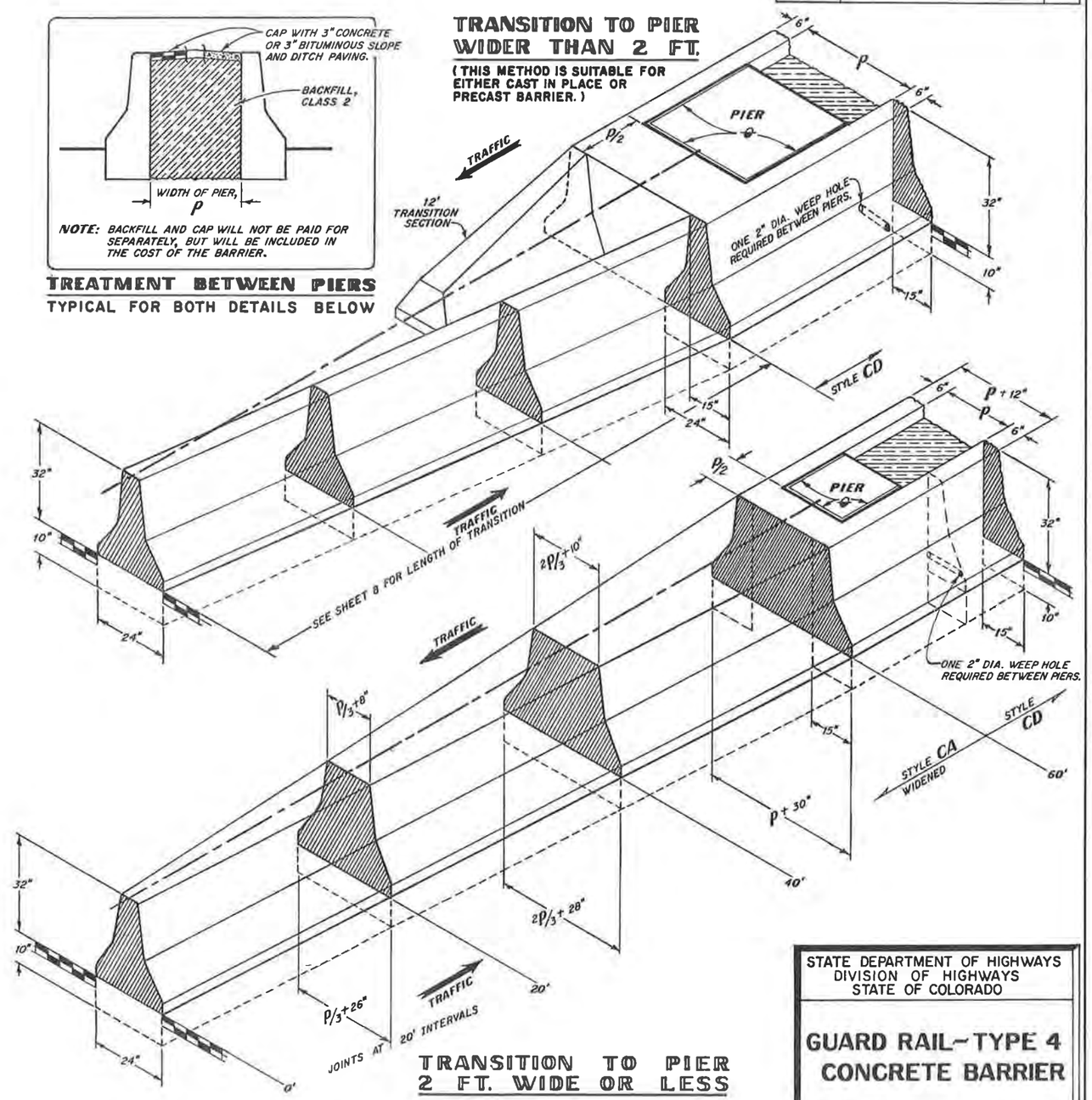

TRANSITION TO PIER 2 FT. WIDE OR LESS

⊖ 1/2" PREFORMED JOINT MATERIAL.

STATE DEPARTMENT OF HIGHWAYS
DIVISION OF HIGHWAYS
STATE OF COLORADO

GUARD RAIL-TYPE 4 CONCRETE BARRIER

APPROVED BY: K.G. Mauro
STAFF DESIGN ENGINEER
DATE: FEBRUARY 18, 1983

STANDARD PLAN NO.
M-606-12
SHEET 2 OF 9

VISION OF HIGHWAYS, STATE OF COLORADO
O H FORM NO. 136
EX. FEB., 1977

DETAILS FOR PRECAST CONCRETE BARRIER

STANDARD M-606-12

(SHEET 3)

FEDERAL ROAD REGION NO	DIVISION	PROJ. NO.	SHEET NO	TOTAL SHEETS
VIII	COLORADO			

REVISIONS		

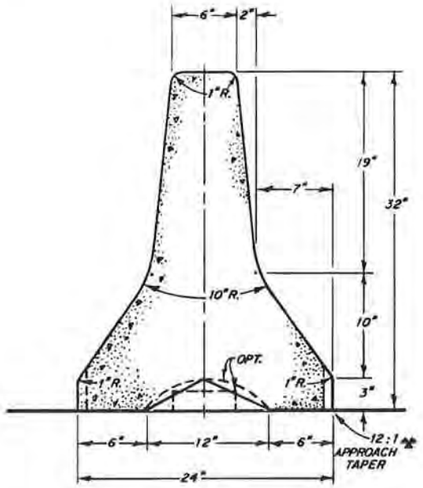

STYLE PA

PRECAST BARRIER

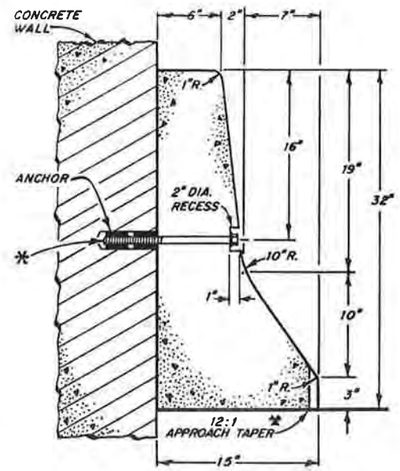

✱ 3/4" DIA. X 12" LONG GALVANIZED ANCHOR BOLT AND WASHER, MECHANICALLY FASTENED AT 2'-6" CTRS.; USE ONLY WHEN CALLED FOR ON PLANS.

STYLE PD

PRECAST BARRIER AGAINST WALL

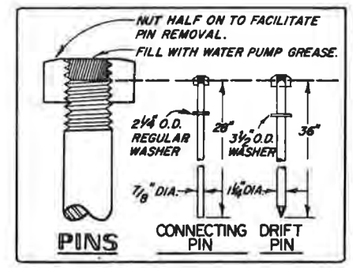

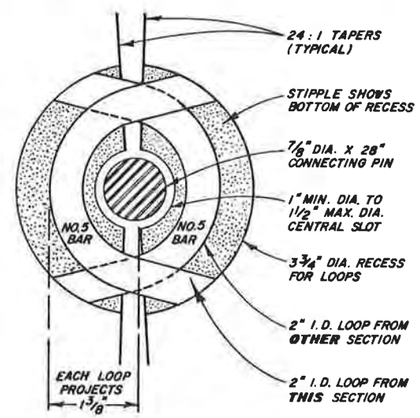

VIEW A-A

BARRIER CONNECTION

(FOR STYLE PA OR PD)

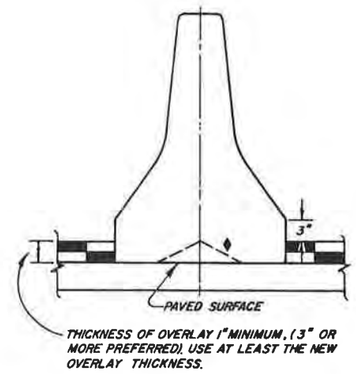

ADJACENT OVERLAY

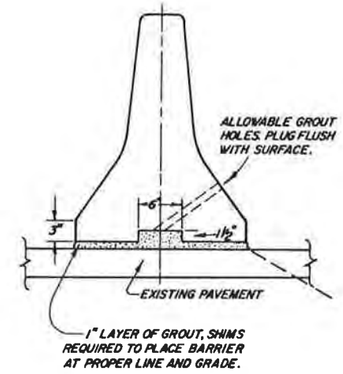

GROUT BED

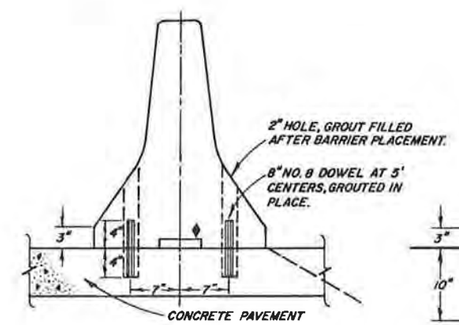

♦ SHAPE OF LONGITUDINAL SPACE IS OPTIONAL OR MAY BE OMITTED.

DOWELLED TO PAVEMENT

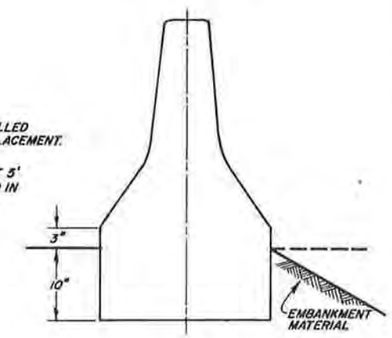

EXCAVATION FOR BASE WILL BE INCLUDED IN THE COST OF BARRIER.

BARRIER WITH BASE

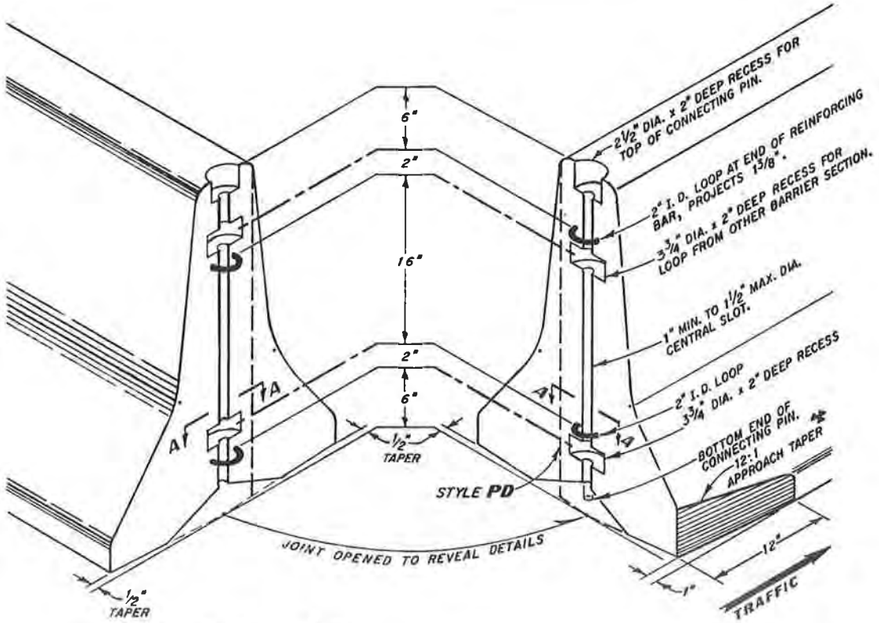

JOINT IN STYLES PA AND PD

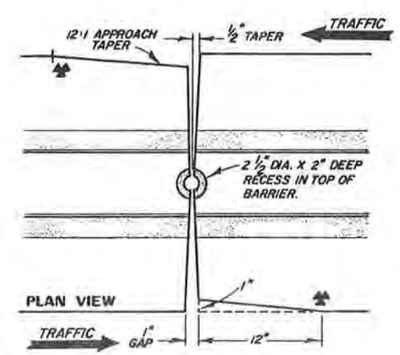

✱ A 1" IN 12" TAPER WILL BE REQUIRED AT **ALL TRAFFIC APPROACH CORNERS** OF PRECAST BARRIER SECTIONS TO ELIMINATE SNAGGING OF SNOW PLOW BLADE (BOTH STYLE **PA** AND **PD** BARRIERS)

JOINT IN PRECAST BARRIER

ANCHOR DETAILS FOR PERMANENT BARRIERS

NOTES:

1. ONE OF THE FOUR ALTERNATE ANCHOR DETAILS SHALL BE USED WHEN PRECAST BARRIER IS INSTALLED AS A PERMANENT BARRIER. STYLE **PA** DIMENSIONS APPLY AND THE BARRIER SHALL BE CAST WITH EXTRA FEATURES OF DOWEL HOLES, EXTRA BASE DEPTH, MODIFIED OR NO LONGITUDINAL SPACE IN BASE, ETC. AS NEEDED TO PROVIDE THE ANCHOR DETAIL TO BE CONSTRUCTED.
2. THESE ANCHOR DETAILS MAY BE USED FOR SHOULDER OR MEDIAN LOCATIONS EXCEPT THE ADJACENT OVERLAY ALTERNATE WHICH IS FOR MEDIANS ONLY.
3. THE 12:1 APPROACH TAPER ON BARRIER BOTTOM IS NOT REQUIRED ON PERMANENT BARRIERS.

STATE DEPARTMENT OF HIGHWAYS
DIVISION OF HIGHWAYS
STATE OF COLORADO

GUARD RAIL — TYPE 4 CONCRETE BARRIER

APPROVED BY: K. R. Morris
STAFF DESIGN ENGINEER
DATE: FEBRUARY 18, 1983

STANDARD PLAN NO. M-606-12
SHEET 3 OF 9

DETAILS FOR PRECAST CONCRETE BARRIER (CONT'D.)

STANDARD M-606-12
(SHEET 4)

FEDERAL ROAD REGION NO.	DIVISION	PROJ. NO.	SHEET NO.	TOTAL SHEETS
VIII	COLORADO			

REVISIONS		

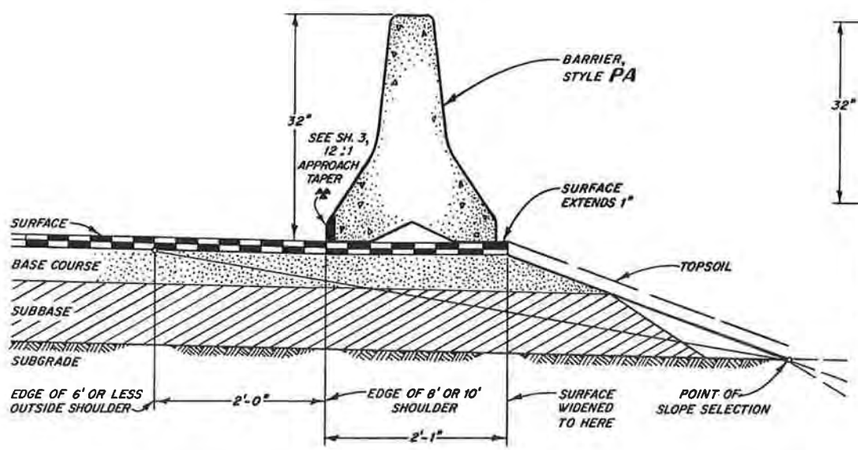

PRECAST CONCRETE BARRIER ON WIDENED SHOULDER

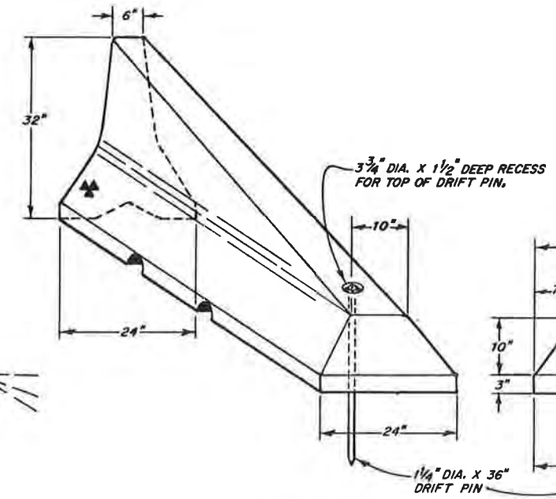

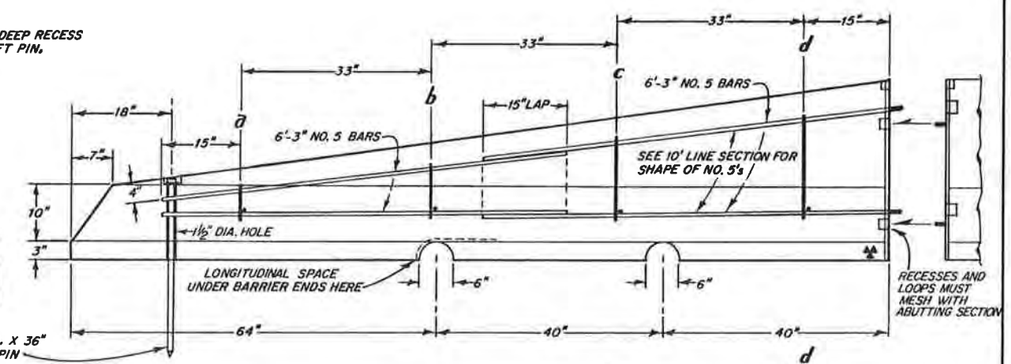

NOTES ON SHEET 2 DESCRIBING THE USES OF CAST IN PLACE 12' TRANSITION SECTION APPLY FOR PRECAST ALSO.

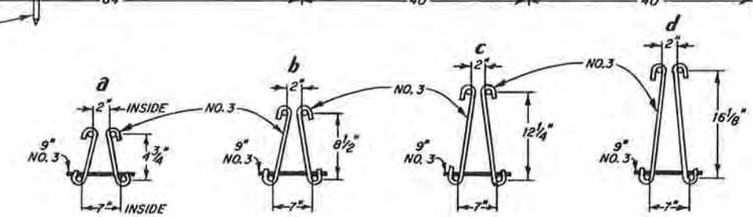

12' TRANSITION SECTION FOR STYLE PA BARRIER

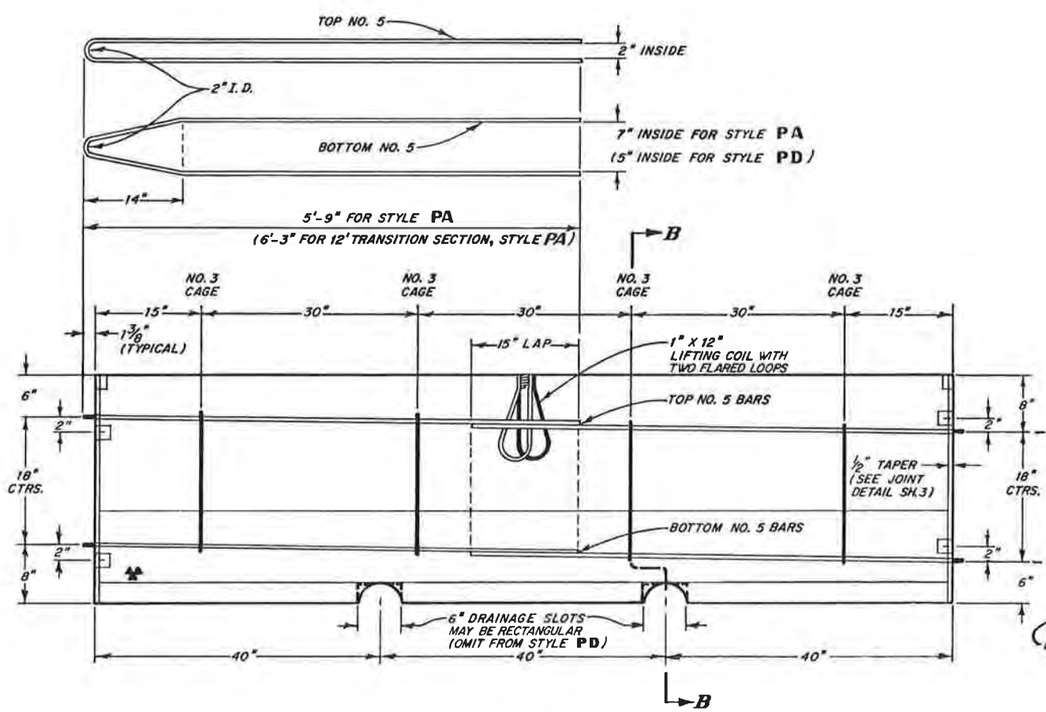

10' LINE SECTION — FOR STYLE PA OR PD

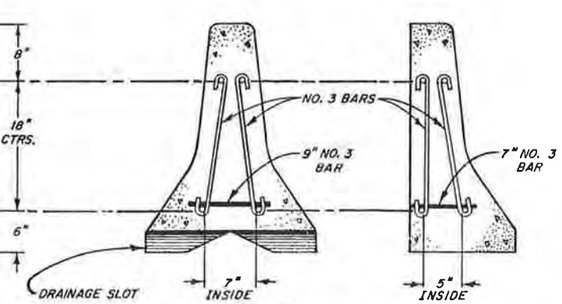

CAGE IN STYLE PA

CAGE IN STYLE PD

SECTIONS B — B

STATE DEPARTMENT OF HIGHWAYS
DIVISION OF HIGHWAYS
STATE OF COLORADO

GUARD RAIL-TYPE 4 CONCRETE BARRIER

APPROVED
DIRECTOR, DIVISION OF HIGHWAYS
DATE FEBRUARY 15 1981

STANDARD PLAN NO.
M-606-12

STANDARD M-606-12

(SHEET 5)

FEDERAL ROAD REGION NO.	DIVISION	PROJ. NO.	SHEET NO.	TOTAL SHEETS
VIII	COLORADO			

REVISIONS		

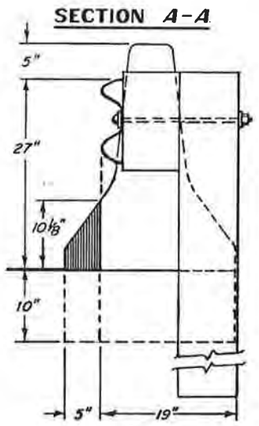

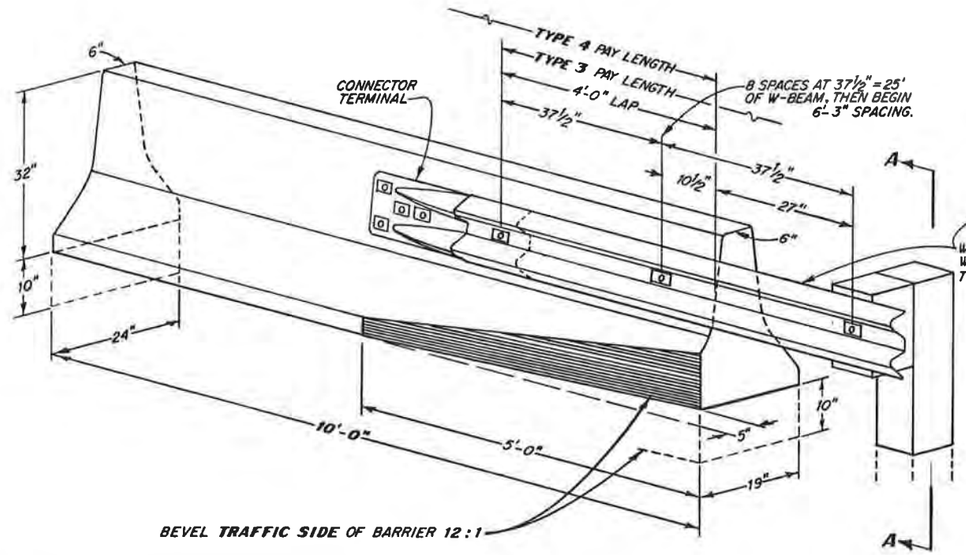

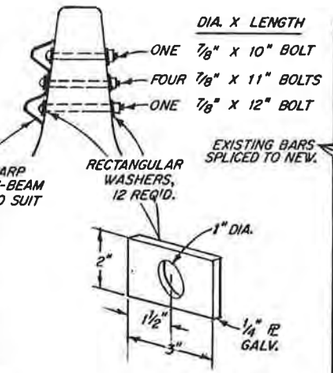

10' TRANSITION TO CONNECT SINGLE W-BEAM TO CONCRETE BARRIER ~ STYLE CA OR PA

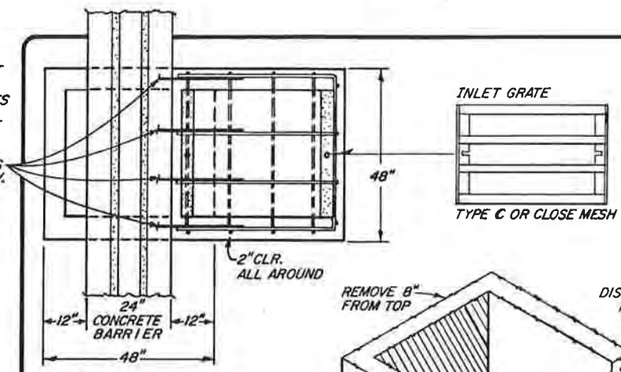

PLAN

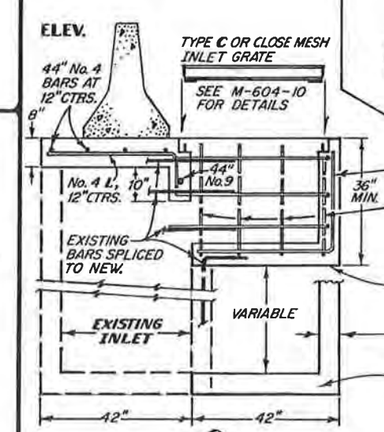

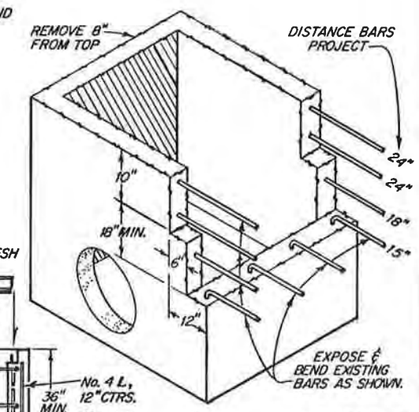

EXISTING INLET PREPARED TO RECEIVE EXTENSION

TREATMENT AT INLET

SHOWING EXTENSION OF EXISTING INLET

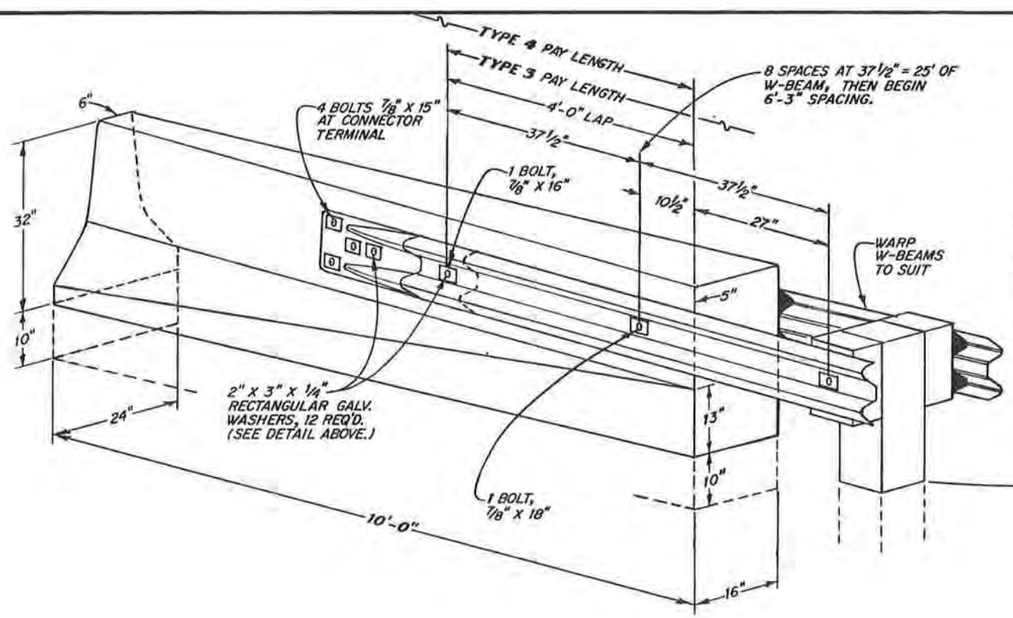

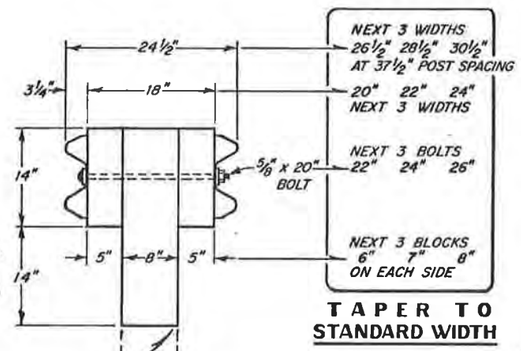

TAPER TO STANDARD WIDTH

10' TRANSITION TO CONNECT DOUBLE W-BEAM TO CONCRETE BARRIER ~ STYLE CA OR PA

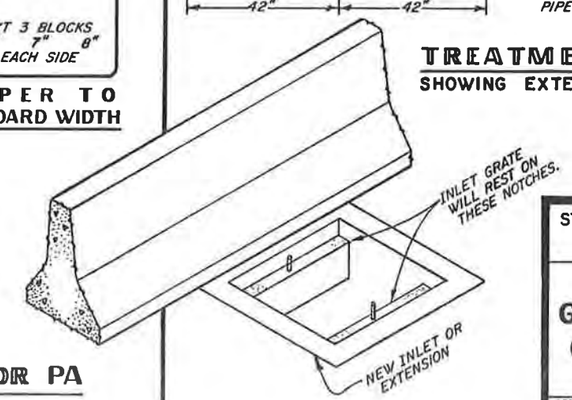

STATE DEPARTMENT OF HIGHWAYS
DIVISION OF HIGHWAYS
STATE OF COLORADO

GUARD RAIL—TYPE 4 CONCRETE BARRIER

APPROVED BY: R.F. Maurer
STAFF DESIGN ENGINEER
DATE: FEBRUARY 18, 1983

STANDARD PLAN NO. M-606-12
SHEET 5 OF 9

SION OF HIGHWAYS, STATE OF COLORADO
: H: FORM NO 126
(FEB., 1977

STANDARD M-606-12

(SHEET 6)

FEDERAL ROAD REGION NO.	DIVISION	PROJ. NO.	SHEET NO.	TOTAL SHEETS
VIII	COLORADO			

REVISIONS		

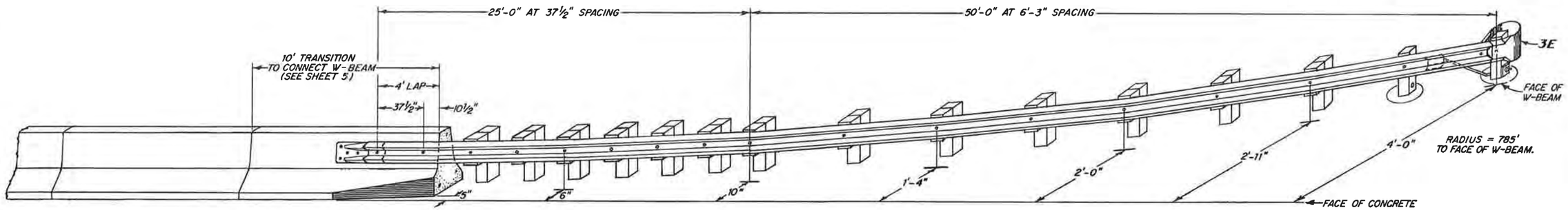

CONCRETE BARRIER WITH TYPE 3 FLARE

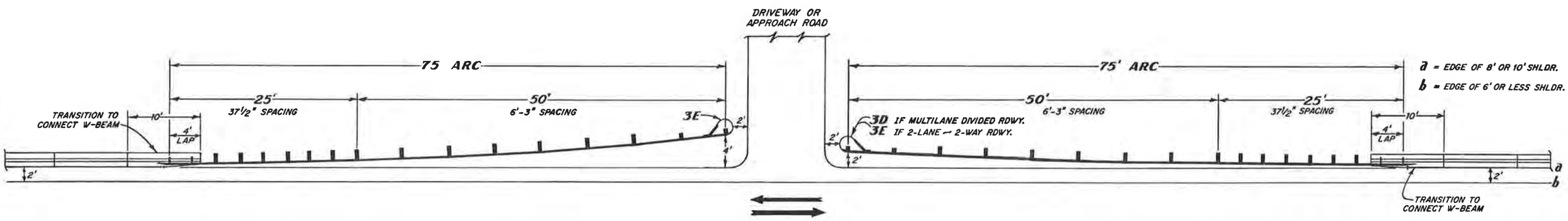

LAYOUT FOR INTERRUPTED SHOULDER BARRIER

STATE DEPARTMENT OF HIGHWAYS
DIVISION OF HIGHWAYS
STATE OF COLORADO

GUARD RAIL-TYPE 4 CONCRETE BARRIER

APPROVED BY: K. J. Mauer
STAFF DESIGN ENGINEER
DATE: FEBRUARY 18, 1983

STANDARD PLAN NO.
M-606-12
SHEET 6 OF 9

SION OF HIGHWAYS, STATE OF COLORADO
I. H. FORM NO. 126
K FEB., 1977

MULTILANE DIVIDED HIGHWAYS

(DEPRESSED MEDIAN)

STANDARD M-606-12

(SHEET 7)

FEDERAL ROAD REGION NO.	DIVISION	PROJ. NO.	SHEET NO.	TOTAL SHEETS
VIII	COLORADO			

REVISIONS		

21' to 30' MEDIANS

ALL DIMS. IN FT.

	M	21	22	23	24	25	26	27	28	29	30
S	4' SHLDR.	110	120	130	140	150	160	170	180	190	200
	8' SHLDR.	30	40	50	60	70	80	90	100	110	120

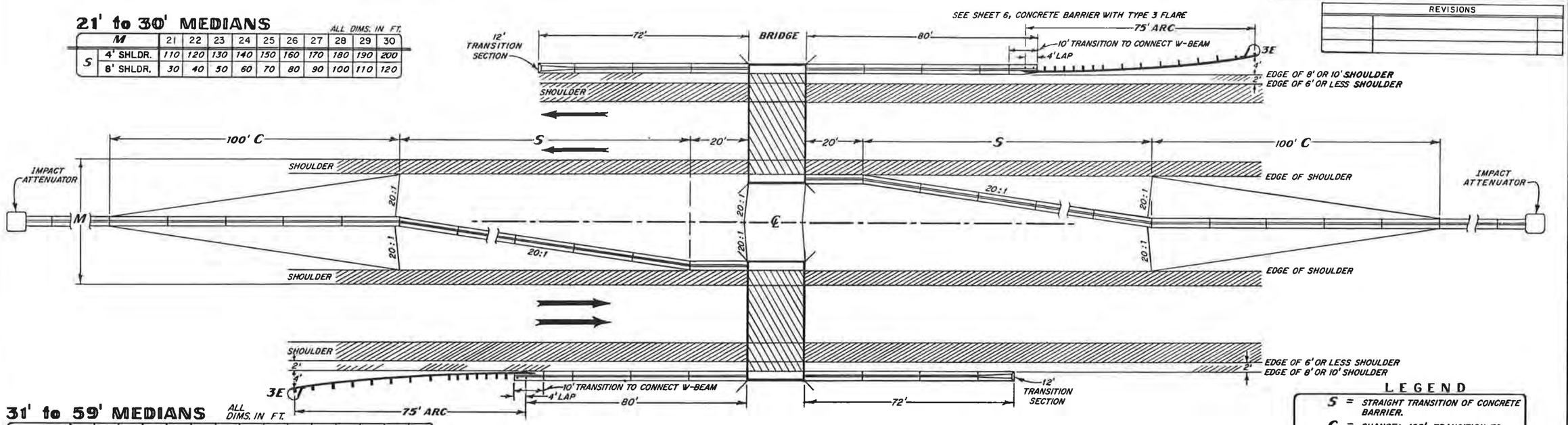

31' to 59' MEDIANS

ALL DIMS. IN FT.

M		31	32	33	34	35	36	37	38	39	40	41	42	43	44	45
4' SHLDR.	S	71	79	86	94	101	109	116	124	131	139	146	154	161	169	176
	L	162	170	177	185	192	200	207	215	222	230	237	245	252	260	267
8' SHLDR.	S	59	59	59	59	59	59	59	64	71	79	86	94	101	109	116
	L	150	150	150	150	150	150	150	155	162	170	177	185	192	200	207

M		46	47	48	49	50	51	52	53	54	55	56	57	58	59
4' SHLDR.	S	184	191	199	206	214	221	229	236	244	251	259	266	274	281
	L	275	282	290	297	305	312	320	327	335	342	350	357	365	372
8' SHLDR.	S	124	132	139	147	154	162	169	177	184	192	199	207	214	222
	L	215	223	230	238	245	253	260	268	275	283	290	298	305	313

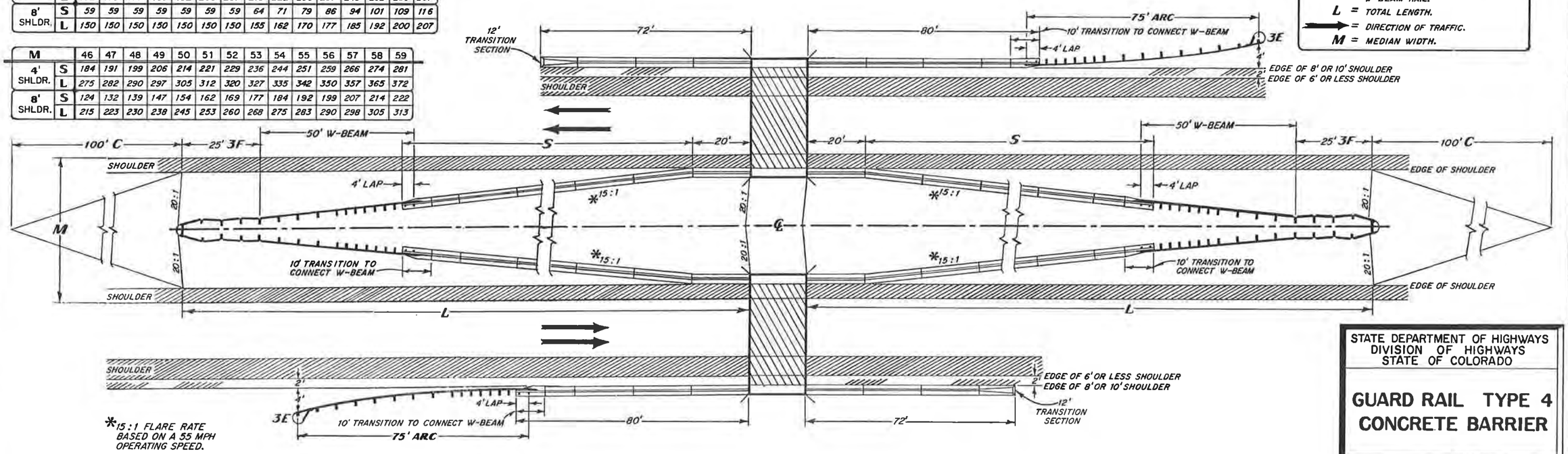

*15:1 FLARE RATE BASED ON A 55 MPH OPERATING SPEED.

LEGEND

- S = STRAIGHT TRANSITION OF CONCRETE BARRIER.
- C = CHANGE: 100' TRANSITION TO NORMAL SLOPE.
- 3E & 3F = STANDARD END TREATMENTS FOR W-BEAM RAIL.
- L = TOTAL LENGTH.
- → = DIRECTION OF TRAFFIC.
- M = MEDIAN WIDTH.

STATE DEPARTMENT OF HIGHWAYS
DIVISION OF HIGHWAYS
STATE OF COLORADO

GUARD RAIL TYPE 4 CONCRETE BARRIER

APPROVED BY: K. T. Mauro
STAFF DESIGN ENGINEER
DATE: FEBRUARY 18, 1983

STANDARD PLAN NO. M-606-12
SHEET 7 OF 9

MULTILANE DIVIDED HIGHWAYS

DEPRESSED MEDIAN (CONTINUED)

STANDARD M-606-12

(SHEET 8)

FEDERAL ROAD REGION NO.	DIVISION	PROJ. NO.	SHEET NO.	TOTAL SHEETS
VIII	COLORADO			

REVISIONS		

MEDIANS 60' ℄ OVER

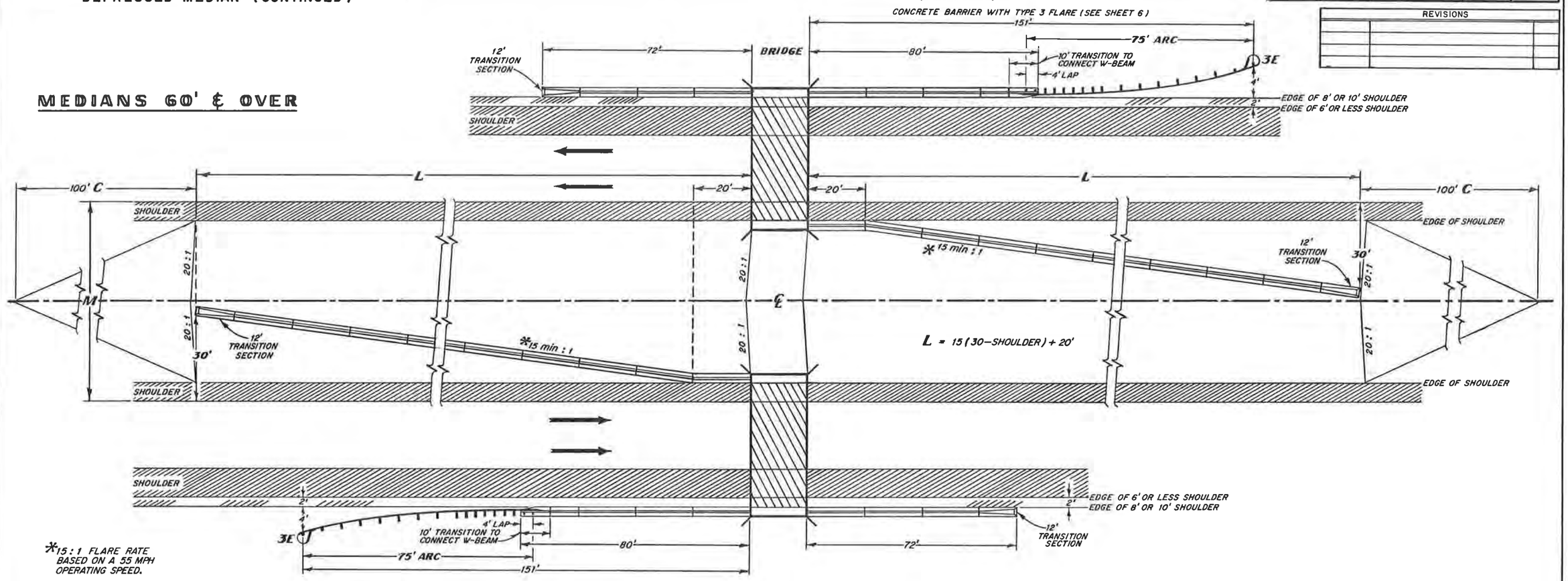

*15 : 1 FLARE RATE BASED ON A 55 MPH OPERATING SPEED.

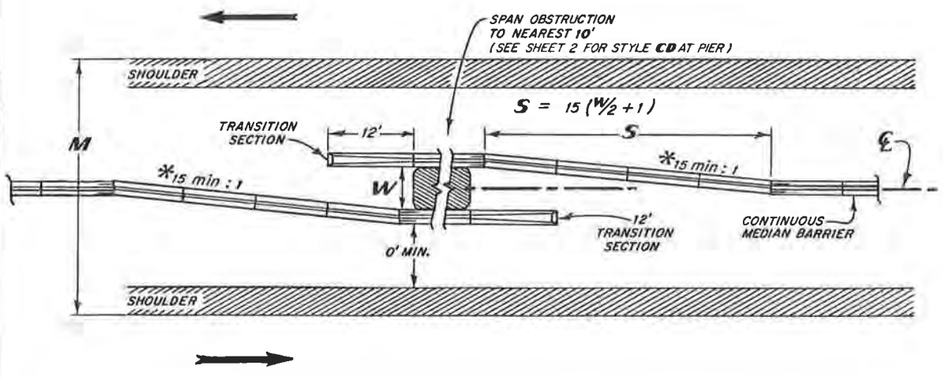

BARRIER AT MEDIAN OBSTRUCTION

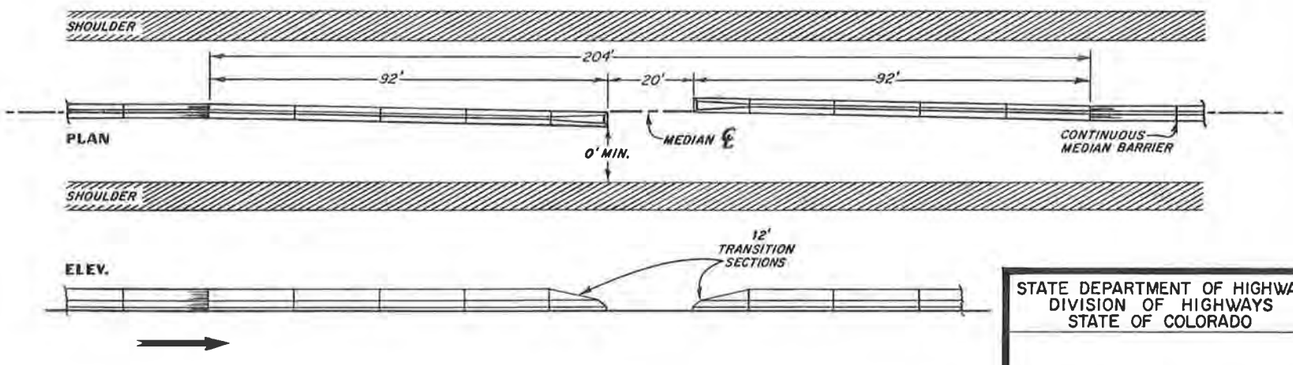

INTERRUPTED MEDIAN BARRIER

STATE DEPARTMENT OF HIGHWAYS
DIVISION OF HIGHWAYS
STATE OF COLORADO

GUARD RAIL-TYPE 4 CONCRETE BARRIER

APPROVED BY: R. R. Moore
STAFF DESIGN ENGINEER
DATE: FEBRUARY 18, 1983

STANDARD PLAN NO. M-606-12
SHEET 8 OF 9

2 LANE ~ 2 WAY HIGHWAYS

STANDARD M-606-12

(SHEET 9 OF 9)

FEDERAL ROAD REGION NO.	DIVISION	PROJ. NO.	SHEET NO.	TOTAL SHEETS
VIII	COLORADO			

REVISIONS		

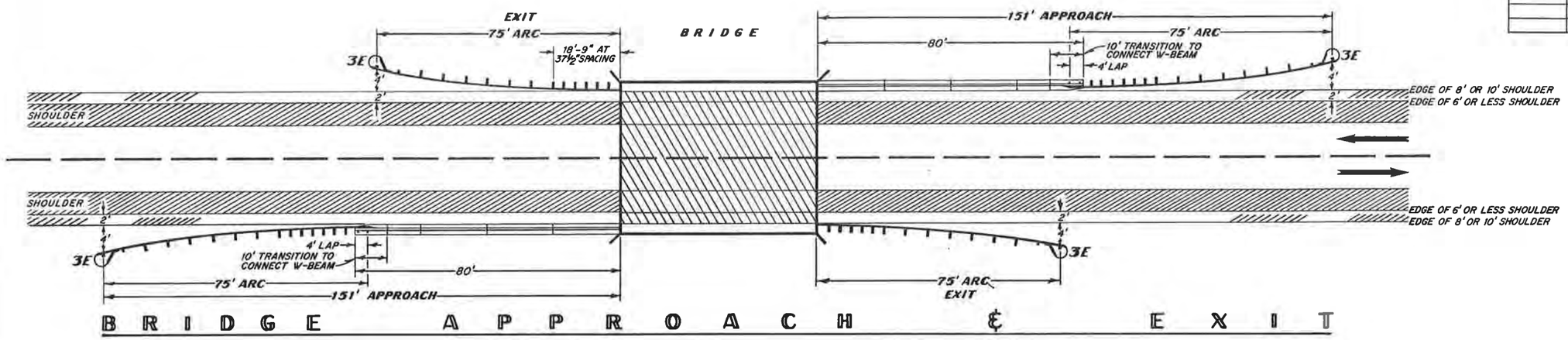

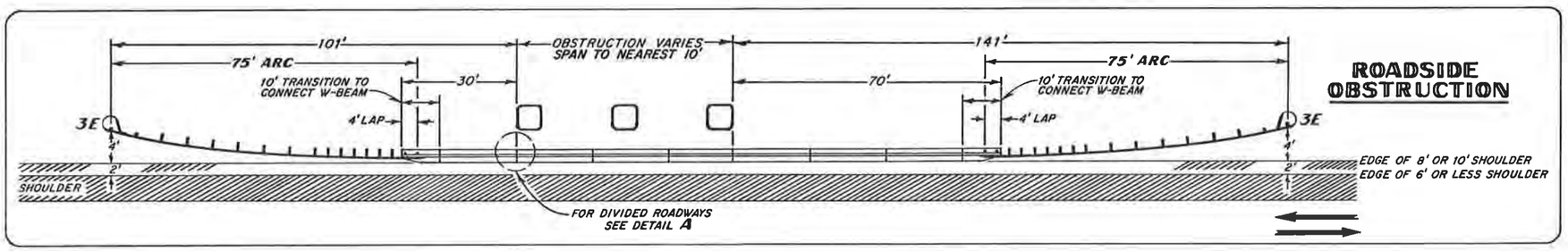

ROADSIDE OBSTRUCTION

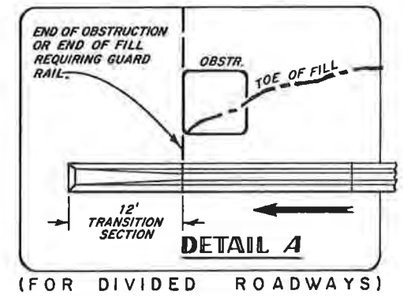

DETAIL A

(FOR DIVIDED ROADWAYS)

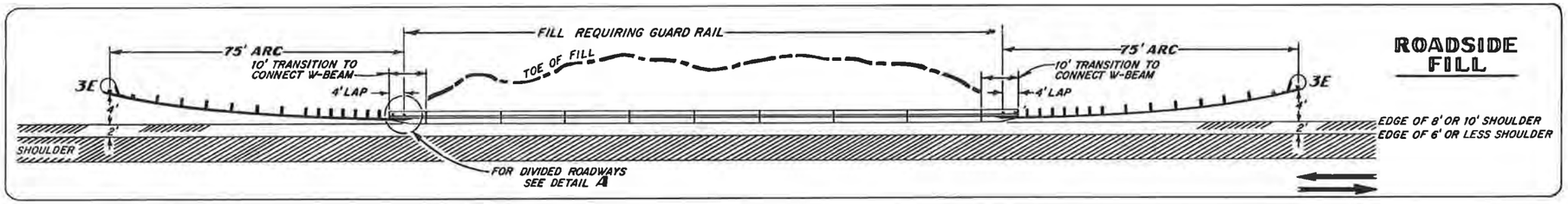

ROADSIDE FILL

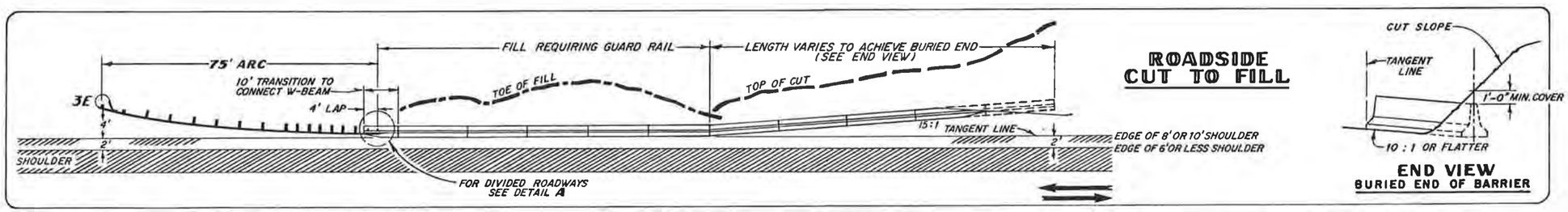

ROADSIDE CUT TO FILL

END VIEW
BURIED END OF BARRIER

STATE DEPARTMENT OF HIGHWAYS
DIVISION OF HIGHWAYS
STATE OF COLORADO

GUARD RAIL – TYPE 4 CONCRETE BARRIER

APPROVED BY: [signature]
STAFF DESIGN ENGINEER
DATE: FEBRUARY 18, 1983

STANDARD PLAN NO
M-606-12
SHEET 9 OF 9

STANDARD M-203-11

~~(JANUARY, 1982)~~

FEDERAL ROAD REGION NO.	DIVISION	PROJECT NO.	SHEET NO.
VIII	COLORADO		

REVISIONS		
(R-A) 8-16-84	Change crown slope to .02'	

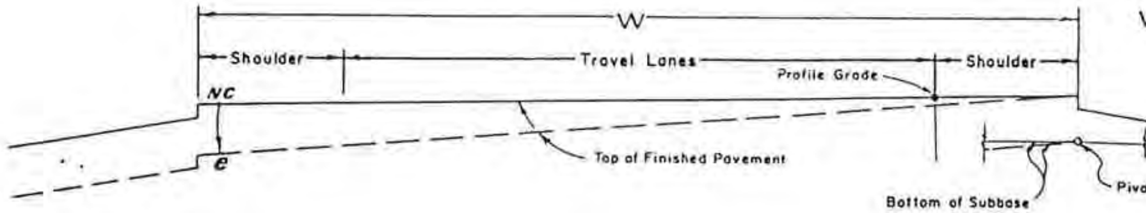

W = Width of Roadway.

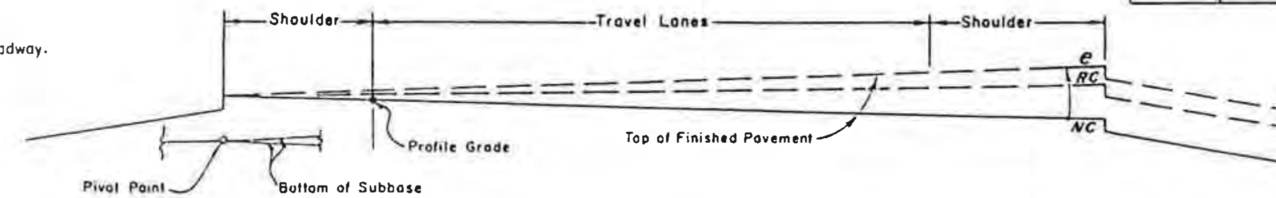

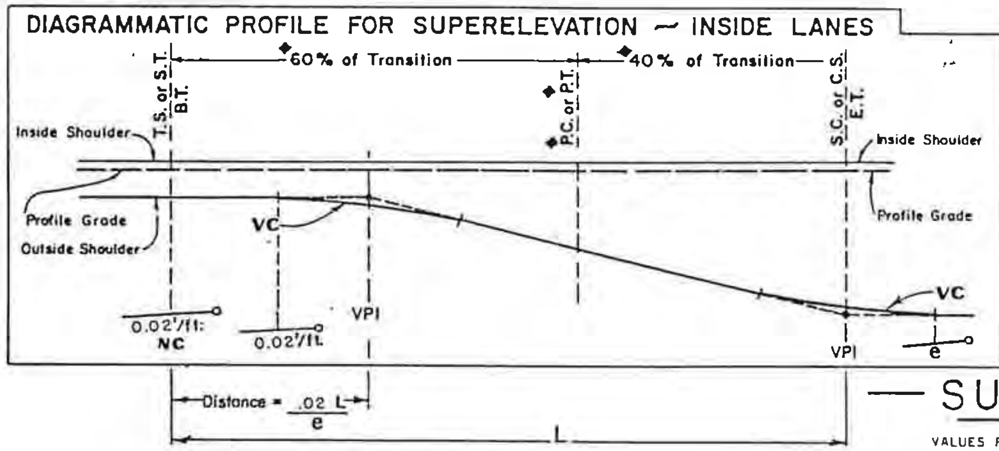

(R-A)

◆ When Curve is Not Spiralled

e = Maximum rate of superelevation in feet (per foot of width) for the given degree of curve and design speed.

o = Pivot

(R-A)

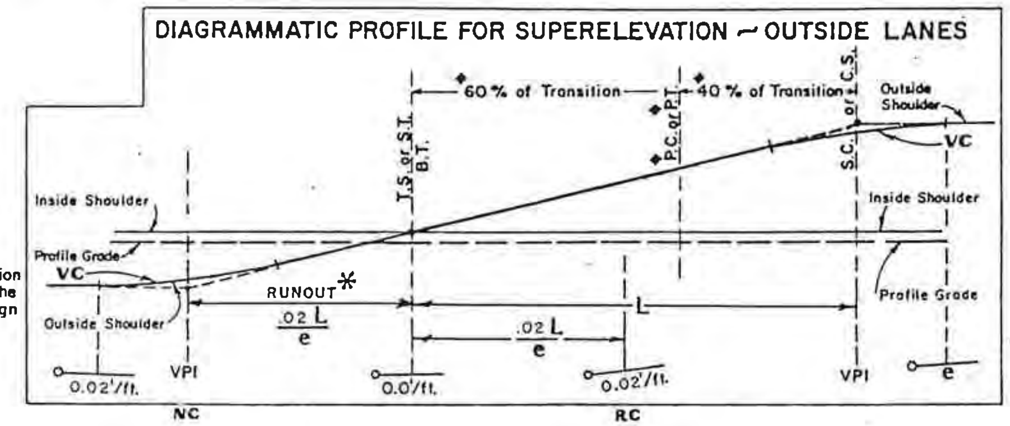

VC —— TO OBTAIN SMOOTH PROFILES ON PAVEMENT EDGES, VERTICAL CURVES MAY BE INSERTED AT THE ANGULAR BREAK POINTS AT THE LOCATIONS SHOWN HERE. UNLESS RESTRAINING CONDITIONS EXIST, THE LENGTH OF VERTICAL CURVE SELECTED, IN FEET, SHOULD BE NO LESS THAN NUMERICALLY EQUAL TO THE DESIGN SPEED, AND NO MORE THAN $\frac{.04L}{e}$. (R-A)

* —— RUNOUT LENGTH SHOULD USUALLY BE .02 L/e. WHEN CONDITIONS ARE SUCH THAT THIS LENGTH IS NOT SUITABLE, THE DESIGNER SHALL CHOOSE ANOTHER LENGTH TO SUIT CONDITIONS.

SUPERELEVATION RATES

VALUES FOR DESIGN ELEMENTS RELATED TO DESIGN SPEED AND HORIZONTAL CURVATURE FOR A FOUR LANE DIVIDED HIGHWAY

Use in Mountainous Areas and Areas where Icing Conditions Frequently Exist

e_{max} = 0.08

D	R	V=30 MPH e	V=30 MPH L-FEET	V=40 MPH e	V=40 MPH L-FEET	V=50 MPH e	V=50 MPH L-FEET	V=60 MPH e	V=60 MPH L-FEET	V=65 MPH e	V=65 MPH L-FEET	V=70 MPH e	V=70 MPH L-FEET	V=75 MPH e	V=75 MPH L-FEET	V=80 MPH e	V=80 MPH L-FEET
0° 15'	22918'	NC	0	NC	0	NC	0	NC	0	NC	0	NC	0	NC	0	RC	240
0° 30'	11459'	NC	0	NC	0	NC	0	RC	175	RC	190	RC	200	.022	220	.024	240
0° 45'	7639'	NC	0	NC	0	RC	150	.022	175	.025	190	.029	200	.032	220	.036	240
1° 00'	5730'	NC	0	RC	125	.021	150	.029	175	.033	190	.038	200	.043	220	.047	240
1° 30'	3820'	RC	100	.021	125	.030	150	.040	175	.048	200	.053	240	.060	290	.065	320
2° 00'	2865'	RC	100	.027	125	.038	150	.051	210	.057	250	.065	290	.072	340	.076	380
2° 30'	2292'	.021	100	.033	125	.046	170	.060	240	.068	290	.073	330	.078	370	.080	400
3° 00'	1910'	.025	100	.038	125	.053	190	.067	270	.073	320	.078	350	.080	380	.080	400
3° 30'	1637'	.029	100	.043	140	.058	210	.073	300	.077	330	.080	360	.080	380	D max=3.5°	
4° 00'	1432'	.032	100	.047	150	.063	230	.077	310	.079	340	.080	360	D max=3.0°			
5° 00'	1146'	.038	100	.055	170	.071	260	.080	320	.080	350	D max=5.5°					
6° 00'	955'	.043	120	.061	190	.077	280	.080	320	D max=4.5°							
7° 00'	819'	.048	130	.067	210	.079	280	D max=5.0°									
8° 00'	716'	.052	140	.071	220	.080	290										
9° 00'	637'	.056	150	.075	240	D max=7.5°											
10° 00'	573'	.059	160	.077	240												
11° 00'	521'	.063	170	.079	250												
12° 00'	477'	.066	180	.080	250												
13° 00'	441'	.068	180	.080	250												
14° 00'	409'	.070	190	D max=13.5°													
16° 00'	358'	.074	200														
18° 00'	318'	.077	210														
20° 00'	286'	.079	210														
22° 00'	260'	.080	220														
		.080	220														
		D max=23.0°															

Use in Rolling Areas and Areas where Icing Conditions Occasionally Exist

e_{max} = 0.10

D	R	V=30 MPH e	V=30 MPH L-FEET	V=40 MPH e	V=40 MPH L-FEET	V=50 MPH e	V=50 MPH L-FEET	V=60 MPH e	V=60 MPH L-FEET	V=65 MPH e	V=65 MPH L-FEET	V=70 MPH e	V=70 MPH L-FEET	V=75 MPH e	V=75 MPH L-FEET	V=80 MPH e	V=80 MPH L-FEET
0° 15'	22918'	NC	0	NC	0	NC	0	NC	0	NC	0	NC	0	NC	0	RC	240
0° 30'	11459'	NC	0	NC	0	NC	0	RC	175	RC	190	RC	200	.022	220	.024	240
0° 45'	7639'	NC	0	NC	0	RC	150	.024	175	.027	190	.029	200	.033	220	.036	240
1° 00'	5730'	NC	0	RC	125	.023	150	.032	175	.035	190	.039	200	.044	220	.048	240
1° 30'	3820'	RC	100	.021	125	.033	150	.046	190	.052	220	.058	260	.065	310	.071	350
2° 00'	2865'	RC	100	.028	125	.042	150	.058	230	.066	290	.074	330	.082	390	.088	440
2° 30'	2292'	.021	100	.034	125	.051	180	.068	280	.077	330	.086	390	.094	450	.099	490
3° 00'	1910'	.025	100	.040	125	.059	210	.079	320	.087	380	.094	420	.100	480	.100	500
3° 30'	1637'	.029	100	.046	140	.067	240	.087	350	.093	400	.099	450	.100	480	.100	500
4° 00'	1432'	.033	100	.051	160	.073	260	.093	380	.098	420	.100	450	D max=3.0°		D max=3.0°	
5° 00'	1146'	.040	110	.061	190	.084	300	.099	400	.100	430	.100	450				
6° 00'	955'	.046	120	.070	220	.092	330	.100	410	D max=4.5°		D max=4.0°					
7° 00'	819'	.053	140	.077	240	.098	350	D max=5.5°									
8° 00'	716'	.059	160	.084	260	.100	360										
9° 00'	637'	.064	170	.089	280	.100	360										
10° 00'	573'	.068	180	.093	290	D max=8.5°											
11° 00'	521'	.073	200	.097	310												
12° 00'	477'	.077	210	.099	310												
13° 00'	441'	.080	220	.100	320												
14° 00'	409'	.083	220	.100	320												
16° 00'	358'	.088	240	D max=13.5°													
18° 00'	318'	.093	250														
20° 00'	286'	.097	260														
22° 00'	260'	.098	270														
24° 00'	239'	.100	270														
		.100	270														
		D max=25.0°															

Use in Plains Areas and Areas where Icing Conditions Seldom Exist or Where Roadways are Well Sanded during Icing Conditions

e_{max} = 0.12

D	R	V=30 MPH e	V=30 MPH L-FEET	V=40 MPH e	V=40 MPH L-FEET	V=50 MPH e	V=50 MPH L-FEET	V=60 MPH e	V=60 MPH L-FEET	V=65 MPH e	V=65 MPH L-FEET	V=70 MPH e	V=70 MPH L-FEET	V=75 MPH e	V=75 MPH L-FEET	V=80 MPH e	V=80 MPH L-FEET
0° 15'	22918'	NC	0	NC	0	NC	0	NC	0	NC	0	NC	0	NC	0	RC	240
0° 30'	11459'	NC	0	NC	0	NC	0	RC	175	RC	190	RC	200	.022	220	.024	240
0° 45'	7639'	NC	0	NC	0	RC	150	.024	175	.026	190	.029	200	.033	220	.036	240
1° 00'	5730'	NC	0	RC	125	.023	150	.031	175	.035	190	.039	200	.043	220	.048	240
1° 30'	3820'	RC	100	.022	125	.034	150	.047	190	.053	230	.059	270	.065	310	.072	380
2° 00'	2865'	RC	100	.030	125	.045	160	.063	250	.070	300	.078	350	.087	410	.095	470
2° 30'	2292'	.022	100	.037	125	.055	200	.076	310	.085	370	.095	430	.105	500	.113	560
3° 00'	1910'	.026	100	.044	140	.063	230	.088	360	.097	420	.108	490	.117	560	.120	600
3° 30'	1637'	.030	100	.050	160	.074	270	.098	400	.107	460	.116	520	.120	570	.120	600
4° 00'	1432'	.034	100	.057	180	.082	300	.106	430	.114	490	.120	540	.120	570	D max=3.0°	
5° 00'	1146'	.042	110	.066	210	.090	330	.117	470	.120	520	.120	540	D max=3.5°			
6° 00'	955'	.049	130	.079	250	.107	390	.120	490	.120	520	D max=4.0°					
7° 00'	819'	.055	150	.088	280	.114	410	.120	490	D max=5.0°							
8° 00'	716'	.062	170	.096	300	.119	420	D max=6.0°									
9° 00'	637'	.068	180	.103	320	.120	430										
10° 00'	573'	.074	200	.108	340	.120	430										
11° 00'	521'	.079	210	.113	360	D max=9.0°											
12° 00'	477'	.084	230	.118	370												
13° 00'	441'	.088	240	.119	370												
14° 00'	409'	.093	250	.120	380												
16° 00'	358'	.101	270	.120	380												
18° 00'	318'	.108	290	D max=14.5°													
20° 00'	286'	.113	310														
22° 00'	260'	.117	320														
26° 00'	220'	.120	320														
		.120	320														
		D max=26.5°															

D – DEGREE OF CURVE
R – RADIUS OF CURVATURE
V – ASSUMED DESIGN SPEED

L – LENGTH OF SUPERELEVATION RUNOFF
NC – NORMAL SECTION
RC – REVERSE SLOPE (APPLICABLE TO OUTSIDE LANES ONLY)

SPIRALS DESIRABLE BUT NOT ESSENTIAL ABOVE THE UPPERMOST HEAVY LINE. LENGTHS ROUNDED IN MULTIPLES OF 25 OR 50 FEET PERMIT SIMPLER CALCULATIONS.

DEPARTMENT OF HIGHWAYS
STATE OF COLORADO
DIVISION OF HIGHWAYS
SUPERELEVATION OF CURVES
DIVIDED HIGHWAYS
SHOULDER PIVOT

(R-A) 8-16-84 DATE REVISED

APPROVED BY [signature] STAFF DESIGN ENGINEER
DATE: OCT. 22, 1971

STANDARD PLAN NO. M-203-11
SHEET 1 OF 1

ORIGINAL

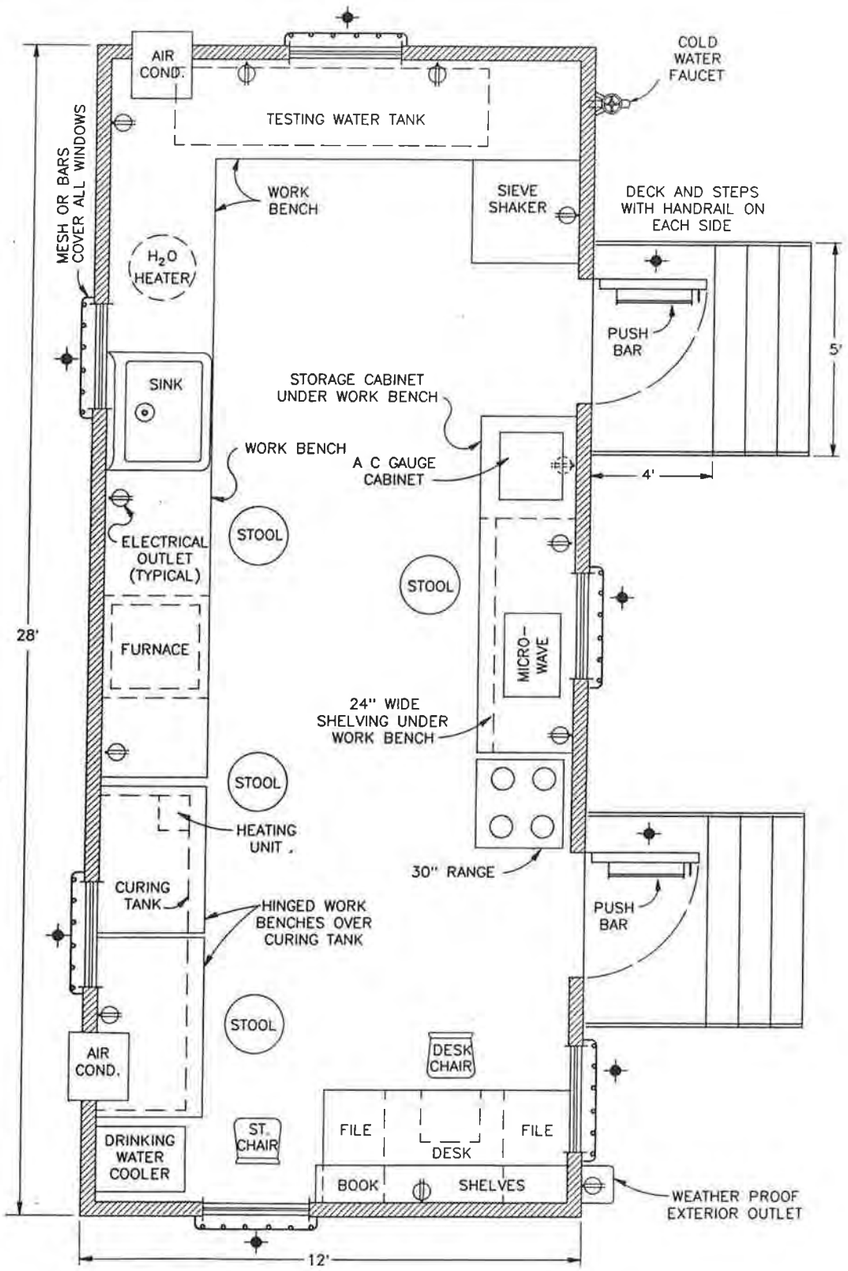

FLOOR PLAN

	REVISIONS

GENERAL NOTES

ALL WORK SHALL BE DONE IN ACCORDANCE WITH THE STANDARD SPECIFICATIONS APPLICABLE TO THE PROJECT.

CLASS 2 FIELD LABORATORIES SHALL CONSIST OF WEATHERPROOF, INSULATED MOBILE HOUSE–TYPE TRAILER WITH FLOOR PLAN AND EQUIPMENT LAYOUT SIMILAR TO THE DRAWINGS ON THIS SHEET AND MEETING THE FOLLOWING MINIMUM REQUIREMENTS:

DIMENSIONS: 28' LONG X 12' WIDE OUTSIDE, 7' HEIGHT INSIDE

WINDOWS: SIX, 30" X 27", CAPABLE OF OPENING AND LOCKING.

DOORS: TWO, DEADBOLT LOCK EQUIPED, 36" X 80", INSULATED STEEL WITH SMALL CLEAR GLASS WINDOW. EQUIPPED WITH HORIZONTAL PUSH BAR, HEAVY DUTY DOOR CLOSERS, AND PULL HANDLE MOUNTED ABOVE PUSH BAR. EACH DOOR SHALL HAVE A SET OF STEPS WITH DECK AND HANDRAILS

FLOOR: ADEQUATE INSULATION UNDER FLOOR. FLOOR COVERING SHALL BE SKID RESISTANT.

HEATING: FURNACE, 55,000 BTU, FORCED AIR TYPE.

AIR CONDITIONERS: TWO, 8,300 BTU MINIMUM EACH.

ELECTRICAL: WORK SHALL CONFORM TO THE NATIONAL ELECTRICAL CODE FOR 110/220 VOLTS, 60 HZ, APPLICATIONS AND PROVIDE RELIABLE UNIFORM POWER TO PROPERLY OPERATE ALL FIELD LAB EQUIPMENT. PROVIDE A SEPARATE ELECTRICAL CIRCUIT TO SUPPLY POWER TO THE ASPHALT CONTENT GAGE AND THE OUTLET IN THE STORAGE CABINET UNDER WORK BENCH.

LIGHTING: ADEQUATE FLUORESCENT LIGHTING DIRECTLY OVER ALL WORK BENCH AND DESK AREAS.

FURNITURE: TWO, TWO DRAWER, LEGAL SIZE FILE CABINETS BUILT INTO DESK AREA. DESK TO BE BUILT IN WITH ONE CENTER DRAWER. ONE DESK CHAIR WITH ROLLERS. ONE STRAIGHT CHAIR. FOUR STOOLS FOR WORK AREA WITH HEIGHT COMPATIBLE WITH WORK BENCHES.

BOOK SHELVES: MINIMUM 10 LINEAR FEET, 10 INCHES WIDE, BUILT OVER DESK AREA. TOP SHELF TO BE AT LEAST 14" BELOW CEILING.

WORK BENCHES: 30" WIDE X 36" HIGH WITH A DURABLE WORKING SURFACE SUCH AS FORMICA.

STORAGE CABINETS: TWO. ONE BUILT–IN UNDER THE WORK BENCH WITH A 28" X 28" LOCK EQUIPPED DOOR, WITH ELECTRICAL OUTLET INSIDE. ONE REMOVABLE, WITH OPEN BOTTOM, LOCK EQUIPPED TO SECURE CABINET TO TOP OF WORK BENCH, LARGE ENOUGH TO COVER A 22" X 18" X 18" HIGH ASPHALT CONTENT GAGE.

SINK: ONE. SINGLE TUB, STAINLESS STEEL, 25" X 22" X 6–1/2" EQUIPPED WITH SPRAY NOZZLE, ONE COMBINATION (MIXING) HOT AND COLD FAUCET AND ONE SINGLE COLD WATER FAUCET. ALL FAUCETS TO BE EQUIPPED WITH STANDARD HOSE THREAD SPIGOTS. DRAIN SHALL HAVE NO TRAP.

DRINKING WATER SUPPLY: DRINKING WATER DISPENSED FROM AN ACCEPTABLE WATER COOLING DEVICE.

TESTING WATER SUPPLY: 300 GALLON WATER CAPACITY, IN ONE OR MORE TANKS LOCATED ALONG THE TRAILER END OR ALONG BOTH SIDES AT THE TRAILER END, VENTED, WITH MEANS OF DETERMINING WATER LEVEL, WITH ONE PRESSURE PUMP, MINIMUM 30 PSI DELIVERY PRESSURE. TEN GALLON ELECTRIC WATER HEATER. ONE COLD WATER FAUCET LOCATED ON OUTSIDE OF TRAILER AS SHOWN. WATER PIPES SHALL BE LOCATED TO BE UNEXPOSED AND PROTECTED FROM DAMAGE. WATER SHALL BE SUPPLIED BY THE CONTRACTOR.

CURING TANK: ONE 2' X 2' X 8' OR TWO 2' X 2' X 4' GALVANIZED STEEL, EQUIPPED WITH WATER FAUCET CONNECTED TO WATER SYSTEM, AND OUTSIDE DRAIN. TANK TO BE INSTALLED AS SHOWN ON THIS SHEET WITH TWO–SECTION HINGED COVER HAVING A DURABLE WORKING SURFACE SUCH AS FORMICA. A FASTENER SHALL BE SUPPLIED TO HOLD THE COVER IN AN OPEN POSITION. THE CURING TANK SHALL BE EQUIPPED WITH A THERMOSTATICALLY CONTROLLED ELECTRIC HEATER CAPABLE OF MAINTAINING THE WATER IN THE TANK AT 73.4 ± 3° F, AND A RECORDING THERMOMETER WITH ITS BULB IN THE STORAGE WATER.

TELEPHONE: MINIMUM FLAT RATE SERVICE FROM NEAREST EXCHANGE.

FIRE EXTINGUISHER: ONE, NON–TOXIC, DRY CHEMICAL, MEETING UNDERWRITERS LABORATORIES, INC. APPROVAL FOR 10 LB. CLASS ABC WITH 20BC RATING.

SIEVE SHAKER: ONE, MOTOR DRIVEN, STANDARD PORTABLE, CAPABLE OF HANDLING A SET OF 8" U.S. STANDARD SIEVES, MOUNTED 24" ABOVE FLOOR IN A SOUND–PROOF, INSULATED ENCLOSURE HAVING A HINGED DOOR.

RANGE: 30" KITCHEN RANGE, ELECTRIC OR GAS, HAVING FOUR SURFACE BURNERS AND OVEN WITH REINFORCED OVEN RACKS.

MICROWAVE OVEN: ONE, 1.5 CU. FT. WITH AT LEAST FIVE POWER LEVELS AND A REVOLVING FLOOR OR ROTATING POWER SOURCE.

BALANCES: TWO. A 2,610 GRAM DIAL–A–GRAM BALANCE THAT MEASURES TO 0.1 GRAM ACCURACY, AND A 20,000 GRAM BALANCE THAT MEASURES TO ONE GRAM ACCURACY.

✚ **SECURITY**: THIS SYMBOL ON THE FLOOR PLAN DENOTES AREAS ON THE LABORATORY WHERE ADEQUATE PROTECTION AGAINST ILLEGAL ENTRY, VANDALISM AND THEFT SHALL BE PROVIDED.

THE REQUIREMENTS LISTED HEREIN ARE INTENDED TO MEET THE NEEDS OF DIVISION OF HIGHWAYS TESTING PERSONNEL CONCERNING TESTING FACILITIES. THERE IS NO INTENT TO SPECIFY ANY STRUCTURAL PORTIONS OF THE SUBJECT LABORATORY EXCEPT AS NEEDED TO SATISFACTORILY PERFORM THE REQUIRED TESTING OF MATERIALS. THE DIVISION DISCLAIMS ANY RESPONSIBILITY FOR THE QUALITY OF THE STRUCTURE.
THE WINDOW SIZES AND LOCATIONS ON TRAILERS BUILT IN ACCORDANCE WITH M–620–2 DATED JAN. 1982 WILL BE ACCEPTED.

STATE DEPARTMENT OF HIGHWAYS
DIVISION OF HIGHWAYS
STATE OF COLORADO

FIELD LABORATORY
CLASS 2

DATE REVISED	APPROVED BY: Kenneth Y. Maurer STAFF DESIGN ENGINEER DATE: MAY 25, 1988	STANDARD PLAN NO. **M-620-2** SHEET **1** OF **1**

M–620–2

05/25/88 10:51:18 NSP1:::(DRAFT) M-6202

STATE OF COLORADO
STATE DEPARTMENT OF HIGHWAYS
DIVISION OF HIGHWAYS
D. O. H. FORM NO. 1266
REV. FEB. 1984

GENERAL NOTES

ALL WORK SHALL BE DONE ACCORDING TO THE STANDARD SPECIFICATIONS OF THE DIVISION OF HIGHWAYS, STATE OF COLORADO, APPLICABLE TO THE PROJECT.

STRUCTURE EXCAVATION AND BACKFILL SHALL BE IN ACCORDANCE WITH STANDARD M-206-2.

EXPANSION JOINT MATERIAL SHALL MEET AASHTO SPECIFICATION M-213.

ALL STRUCTURAL STEEL SHALL BE AASHTO M-222 (ASTM A-588, CORROSION RESISTANT), UNLESS OTHERWISE NOTED. REQUIREMENTS FOR PAINTING STEEL ARE GIVEN IN REVISION OF SECTION 509, STRUCTURAL STEEL PAINTING. INSIDE OF BOX GIRDERS SHALL RECEIVE ONE SHOP COAT OF PAINT. EXPOSED SURFACES SHALL BE PAINTED AS PER SPECIFICATIONS.

FOLLOWING MEMBERS SHALL BE FRACTURE CRITICAL: ALL STRUCTURAL ELEMENTS USING AASHTO M-222 (ASTM A-588) STEEL ▲ AND ANY MEMBER INDICATED AS FCM IN THESE DRAWINGS. R-1

ALL BOLTS SHALL BE AASHTO M-164 (ASTM A-325), 7/8 INCH DIAMETER, HIGH STRENGTH, TYPE 3, UNLESS OTHERWISE NOTED.

NO FIELD WELDING OF ANY KIND SHALL BE PERMITTED ON THE FLANGES OF STEEL GIRDERS UNLESS SPECIFICALLY CALLED FOR ON THE PLANS. SHOP WELDING FOR SPLICES OF FLANGES AND WEBS, AS DETAILED ON THE PLANS, SHALL BE PERMITTED. SHOP DRAWINGS SHALL SHOW LOCATION AND DETAILS OF ALL SHOP SPLICES.

CLASS I FINISH, FOLLOWED BY APPLICATION OF A COLORED ACRYLIC COATING, WILL BE REQUIRED ON ALL EXPOSED CONCRETE SURFACES DOWN TO 1'-0" BELOW GROUND LINE. REQUIREMENTS FOR COATING ARE GIVEN IN REVISION OF SECTION 601, STRUCTURAL CONCRETE (COATING).

ALL EXTERIOR CONCRETE CORNERS SHALL BE CONSTRUCTED WITH 3/4" CHAMFERS, UNLESS OTHERWISE NOTED.

GRADE 60 REINFORCING STEEL IS REQUIRED FOR #4 BARS AND LARGER. ALL REINFORCING STEEL SHALL BE EPOXY COATED, UNLESS NOTED OTHERWISE.

THE FOLLOWING TABLE GIVES THE MINIMUM LAP SPLICE LENGTH FOR REINFORCING BARS:

BAR SIZE	#4	#5	#6	#7	#8	#9	#10	#11
SPLICE LENGTH FOR CLASS B CONCRETE	1'-0"	1'-3"	1'-8"	2'-3"	3'-0"	3'-10"	4'-10"	5'-11"
SPLICE LENGTH FOR CLASS D, BZ & S CONCRETE	1'-0"	1'-3"	1'-6"	2'-0"	2'-7"	3'-4"	4'-2"	5'-1"

THE ABOVE SPLICE LENGTHS SHALL BE INCREASED BY 20 PERCENT FOR 3 BAR BUNDLES AND 33 PERCENT FOR 4 BAR BUNDLES.

ANY REINFORCING STEEL SPLICES NOT SHOWN SHALL BE APPROVED BY THE ENGINEER.

APPLIED WIND LOADS AND EARTHQUAKE LOADS WERE NOT CONSIDERED IN ANALYZING THE STRUCTURE FOR STABILITY DURING THE CONSTRUCTION STAGES.

FOR STRUCTURE NUMBER INSTALLATION, SEE STANDARD S-614-12.

PERMANENT STEEL BRIDGE DECK FORMS SHALL BE USED FOR ALL INTERIOR SLAB SPANS AS SHOWN IN THE TYPICAL SECTIONS. NO STEEL BRIDGE DECK FORMS WILL BE ALLOWED ON THE CANTILEVER PORTIONS OF THE SLAB. FORMS SHALL NOT BE ATTACHED TO THE STEEL GIRDERS BY WELDING.

THE INFORMATION SHOWN ON THESE PLANS CONCERNING TYPE AND LOCATION OF UNDERGROUND UTILITIES IS NOT GUARANTEED TO BE ACCURATE OR ALL INCLUSIVE. THE CONTRACTOR IS RESPONSIBLE FOR MAKING HIS OWN DETERMINATION AS TO THE TYPE AND LOCATION OF UNDERGROUND UTILITIES AS MAY BE NECESSARY TO AVOID DAMAGE TO THEM.

THE FOLLOWING ARE STANDARD ABBREVIATIONS:

E.F. = EACH FACE
F.F. = FAR FACE
N.F. = NEAR FACE
E.W. = EACH WAY
T.F. = TOP FACE
B.F. = BOTTOM FACE
N.C. = NON-EPOXY COATED

DESIGN NOTES

CURRENT AASHTO SPECIFICATIONS:

LIVE LOAD : AASHTO HS-20-44 AND INTERSTATE ALTERNATE
DEAD LOAD : ASSUMES 48 LBS. PER SQ. FT. FOR BITUMINOUS PAVEMENT
ASSUMES 7 LBS. PER SQ. FT. FOR IN-PLACE CONCRETE FORMWORK

REINFORCED CONCRETE:
CLASS B CONCRETE: fc = 1,200 psi, n = 9, f'c = 3,000 psi AT 28 DAYS
CLASS D CONCRETE: fc = 1,800 psi, n = 8, f'c = 4,500 psi AT 28 DAYS

REINFORCING STEEL: #4 BARS AND LARGER: fs = 24,000 psi, fy = 60,000 psi

STRUCTURAL STEEL: AASHTO M-183 (ASTM A-36) fs = 20,000 psi
AASHTO M-222 (ASTM A-588) fs = 27,000 psi

PRESTRESSED CONCRETE:
CLASS S CONCRETE: f'c = 5,500 psi AT 28 DAYS
f'ci = 4,500 psi AT STRESSING

PRESTRESSING STEEL: HIGH STRENGTH ALLOY STEEL BARS CONFORMING TO ASTM A-722, ULTIMATE STRENGTH = 150,000 psi MINIMUM.

DESIGN METHOD:

SUPERSTRUCTURE: SERVICE LOAD DESIGN (WORKING STRESS)
SUBSTRUCTURE: SERVICE LOAD (WORKING STRESS) EXCEPT LOAD FACTOR DESIGN FOR PIER COLUMNS AND CAISSONS.

▲ Except Pintles (Dwg. B-33 & B-34) R-1

INDEX OF DRAWINGS

B-1 GENERAL INFORMATION
B-2 SUMMARY OF QUANTITIES
B-3 GENERAL LAYOUT RAMP G - UNIT 1
B-4 GENERAL LAYOUT RAMP G - UNIT 2
B-5 TYPICAL SECTIONS
B-6 ENGINEERING GEOLOGY
B-7 CAISSON AND CONSTRUCTION LAYOUT - UNIT 1 & 2
B-8 CAISSON AND CONSTRUCTION LAYOUT - UNIT 2
B-9 CAISSON DETAILS
B-10 PIER 3H(S) BEARING SEAT DETAILS
B-11 PIERS 4G, 5G, & 6G DETAILS
B-12 PIER 7G DETAILS
B-13 PIER 7G SECTIONS
B-14 PIERS 8G, 9G, 10G, 11G, & 12G DETAILS
B-15 PIER CAP PRESTRESSING - PIERS 4G THRU 6G
B-16 PIER CAP PRESTRESSING - PIERS 8G THRU 12G
B-17 PIER CAP REINFORCEMENT - PIERS 4G THRU 6G AND 8G THRU 12G
B-18 ABUTMENT 13G DETAILS
B-19 ABUTMENT 13G AND WINGWALL DETAILS
B-20 FRAMING PLAN AND GIRDER ELEVATION - UNIT 1
B-21 FRAMING PLAN AND GIRDER ELEVATION - UNIT 1
B-22 FRAMING PLAN AND GIRDER ELEVATION - UNIT 2
B-23 FRAMING PLAN AND GIRDER ELEVATION - UNIT 2
B-24 FRAMING PLAN AND GIRDER ELEVATION - UNIT 2
B-25 FRAMING PLAN AND GIRDER ELEVATION - UNIT 2
B-26 ERECTION PROCEDURE
B-27 BEARING DEVICE (TYPE III) DETAILS
B-28 BEARING DEVICE (TYPE III) DETAILS
B-29 END DIAPHRAGM DETAILS - PIER 3H(S) AND ABUTMENT 13G
B-30 END DIAPHRAGM DETAILS - PIER 7G
B-31 INTERIOR DIAPHRAGM DETAILS - PIERS 4G THRU 6G & 8G THRU 12G
B-32 DIAPHRAGM AND STRUCTURAL STEEL - MISCELLANEOUS DETAILS
B-33 STRUCTURAL STEEL MISCELLANEOUS DETAILS
B-34 BOX GIRDER - FIELD SPLICES
B-35 STEEL BOX GIRDER CAMBER DIAGRAM - UNIT 1
B-36 STEEL BOX GIRDER CAMBER DIAGRAM - UNIT 2
B-37 DECK REINFORCEMENT - UNIT 1
B-38 DECK REINFORCEMENT - UNIT 2
B-39 DECK REINFORCEMENT AND SECTIONS - UNITS 1 & 2
B-40 DECK REINFORCING AT EXPANSION DEVICES
B-41 EXPANSION DEVICE (0-9 INCH) - PIER 3H(S)
B-42 EXPANSION DEVICE (0-9 INCH) - PIER 7G
B-43 EXPANSION DEVICE (0-9 INCH) - ABUTMENT 13G
B-44 EXPANSION DEVICE (0-9 INCH) DETAILS
B-45 STEEL BOX GIRDER BRIDGE EXPANSION JOINT DETAILS
B-46 BRIDGE RAIL TYPE 4
B-47 BRIDGE DRAIN (SPECIAL)
B-48 APPROACH SLAB DETAILS
B-49 INTERIOR LIGHTING (STEEL BOX GIRDER)
B-50 BENCH MARK
B-51 BRIDGE DECK ELEVATIONS
B-52 BRIDGE DECK ELEVATIONS
B-53 BRIDGE DECK ELEVATIONS
B-54 BRIDGE DECK ELEVATIONS
B-55 BRIDGE DECK ELEVATIONS
B-56 BRIDGE DECK ELEVATIONS
B-57 ROADWAY APPROACHES

AS CONSTRUCTED
NO REVISIONS ☐ REVISED ☐ VOID ☐

FED. ROAD REGION	DIVISION	PROJ. NO.	SHEET NO.	SHEET TOTALS
VIII	COLO.	IR25-2(208)	91	

	REVISIONS		
R-1	7-11-88	Note Added & Signature	J.A.B.

CROSS REFERENCE DRAWING NUMBER
B-
SECTION OR DETAIL IDENTIFICATION

BRIDGE DESCRIPTION

UNIT 1 : 4-SPAN (97'-10 13/16", 118'-4 1/16", 118'-3 15/16", 116'-2 1/2") BRIDGE.
UNIT 2 : 6-SPAN (86'-1 5/8", 137'-6", 172'-8 7/8", 138'-1 11/16", 111'-0", 88'-8 5/8") BRIDGE.
EACH UNIT CONTINUOUS AND COMPOSITE, STEEL BOX GIRDER.

OVER I-25 AND 6TH AVENUE.
VARIABLE ROADWAY WIDTH AND SKEW.
1'-6" CONCRETE BARRIERS. BRIDGE RAIL TYPE 4.

	INITIAL	DATE	CHECKED BY
DESIGNED BY	J.L.S.	1-87	
CHECKED BY	J.A.B.	7-88	
DETAILED BY	S.S.	1-87	

R-1

Reviewed
BRIDGE ENGINEER DATE

DeLeuw, Cather & Company Denver, CO.

DIVISION OF HIGHWAYS

GENERAL INFORMATION
Sta. 803+18.00 to 815+11.75

In DENVER Sec. 4 & 9 T4S R68W

Designer J. L. Stapleton | Structure Numbers F-16-OL
Detailer S. Shibao
Drawing Number B-1 of 57 Drawings

Revision Dates
Preliminary Stage Only

STATE OF COLORADO
STATE DEPARTMENT OF HIGHWAYS
DIVISION OF HIGHWAYS
D. O. H. FORM NO. 1261
REV. FEB. 1984

STATE DEPARTMENT OF HIGHWAYS
DIVISION OF HIGHWAYS - STATE OF COLORADO

P.E.,R.O.W. & UTILITIES UNDER IR25-2(174)

FED. ROAD REGION	DIVISION	PROJ. NO.	SHEET NO.	SHEET TOTALS
VIII	COLORADO	IR 25-2(208)	1	

AS CONSTRUCTED

NO REVISIONS ☐ REVISED ☐ VOID ☐

	REVISIONS		
R-1	7-11-88	Sheet nos. 1, 13, 53, 83 & 73	JLK

PLAN AND PROFILE OF PROPOSED

FEDERAL AID PROJECT NO. IR 25-2(208)

STATE HIGHWAY NOS. 6 & 25

DENVER COUNTY

TABULATION OF LENGTH AND DESIGN DATA

STATION	STRUCTURE LIN. FT.	STRUCTURE MILE	ROADWAY LIN. FT.	ROADWAY MILE
RAMP "G"				
STRUCTURE NO. F-16-OL 803+18.00 TO 815+11.75	1,193.75	0.2261		
815+11.75 TO 817+53.59			241.84	0.0458
AUXILIARY LANE 300+00.00 TO 334+40.00 (MP 208.13)			3,440.00	0.6515
DETOUR REMOVAL 268+84.70 TO 275+50.00 (MP 209.38)			665.30	0.1260

SUMMARY	LIN. FT.	MILES
ROADWAY	4,347.14	0.8233
MAJOR STRUCTURE	1,193.75	0.2261
PROJECT GROSS LENGTH	5,540.89	1.0494

DESIGN DATA	RAMP "G"
MAXIMUM DEGREE OF CURVE	14°19'26"
MAXIMUM GRADE	4.50%
MINIMUM S.S.D. HORIZONTAL	236'
MINIMUM S.S.D. VERTICAL	321'
MAXIMUM DESIGN SPEED	35 MPH

SCALES OF ORIGINAL DRAWINGS

ON PLAN, 1 IN. =50 FT.
ON PROFILE { 1 IN. =50 FT. HORIZONTAL; 1 IN. =10 FT. VERTICAL

GRADE LINE ON PROFILE IS SHOWN AS GRADE OF FINISHED ROAD

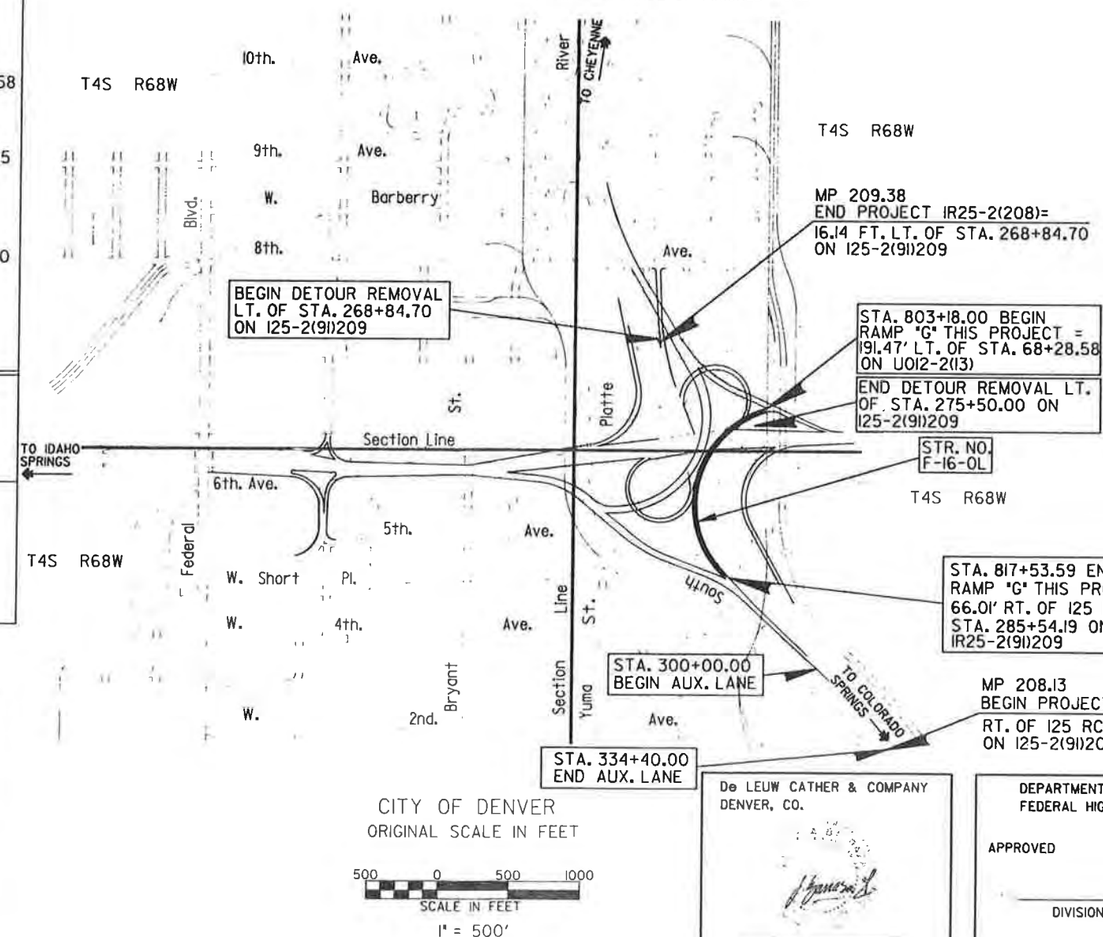

INDEX OF SHEETS

SHEET NO.	
1	TITLE SHEET
2	STANDARD PLANS LIST
3	I25/6TH AVE. INTERCHANGE CONTROL POINTS
4	I25/6TH AVE. INTERCHANGE CONTROL POINT DIAGRAM
5	I25/6TH AVE. IMPROVEMENTS
6	2000 TRAFFIC DIAGRAM & GENERAL NOTES
7-8	TYPICAL SECTIONS
9-13	SUMMARY OF APPROXIMATE QUANTITIES
14	SUMMARY OF EARTHWORK, TABULATION OF GUARD RAIL, TABULATION OF CURB & GUTTER
15	TABULATION OF SURFACING QUANTITIES
16-17	TABULATION OF REMOVE, ADJUST, AND RESET ITEMS
18	TABULATION OF STORM SEWER SYSTEM
19-22	CONSTRUCTION STAGING PLANS
23	GEOMETRIC LAYOUT
24-25	GEOMETRIC PLAN W. 6TH AVE.
26	PLAN & PROFILE RAMP "G"
27	PLAN & PROFILE DETOURS (REMOVAL)
28	GEOMETRIC PLAN RAMP 'F' ENTRANCE TO I-25
29-31	GEOMETRIC PLAN I-25 SOUTHBOUND AUXILIARY LANE
32	GEOMETRIC PLAN RAMP "B"
33	PROFILE RAMP "B"
34-40	DRAINAGE & UTILITY PLANS
41-42	DRAINAGE CROSS SECTIONS
43	DRAINAGE AND BARRIER DETAILS
44-45	IMPACT ATTENUATOR DETAILS
46-47	SURVEY MONUMENTS
48-49	GRADING PLAN AND SEEDING LIMITS
50-52	LANDSCAPE PLANS
53-55	IRRIGATION PLANS
56-60	LIGHTING PLANS AND DETAILS
61-73	SIGNING AND PAVEMENT MARKING PLANS
74-83	SIGNING AND PAVEMENT MARKING DETAILS
84-90	RETAINING WALLS
91-147	STRUCTURE F-16-OL
148-149	BRIDGE RAIL & BARRIERS (STRUCTURE F-16-DU AND F-16-EJ)

NEW AND REVISED STANDARDS

M-606-12	GUARD RAIL TYPE 4, CONCRETE BARRIER (9 SHEETS)	2-18-83
M-203-11	SUPERELEVATION OF CURVES-DIVIDED HIGHWAYS-SHOULDER PIVOT (1 SHEET)	8-16-84
M-620-2	FIELD LABORATORY - CLASS 2 (1 SHEET)	5-25-88

DIVISION OF HIGHWAYS

APPROVED :

James E. Siebel 6-20-88
Asst. CHIEF ENGINEER DATE

De LEUW CATHER & COMPANY
DENVER, CO.

PROJECT MANAGER

DEPARTMENT OF TRANSPORTATION
FEDERAL HIGHWAY ADMINISTRATION

APPROVED _____ DATE

DIVISION ADMINISTRATOR

AS CONSTRUCTED INFORMATION

CONTRACTOR _____
_____ ENGINEER _____
(Project or Resident)
PROJECT STARTED _____
PROJECT COMPLETED _____
AS CONSTRUCTED PLANS APPROVED _____
TITLE DATE

J.K.K. / Dist. VI /R.D.T.

STATE OF COLORADO
STATE DEPARTMENT OF HIGHWAYS
DIVISION OF HIGHWAYS
D. O. H. FORM NO. 126
REV. FEB. 1984

R-1 7-11-88 ADD PAY ITEMS J.K.K.

SUMMARY OF APPROXIMATE QUANTITIES

AS CONSTRUCTED: NO REVISIONS ☐ REVISED ☐ VOID ☐

FED. ROAD REGION	DIVISION	PROJ. NO.	SHEET NO.	SHEET TOTALS
VIII	COLO.	IR 25-2(208)	13	

INDEX BOOK	INDEX PAGE	INDEX SHEET	CONTRACT ITEM NO.	CONTRACT ITEM	UNIT		ROADWAY	AS CONST. ROADWAY		STR. NO. F-16-OL	AS CONST. F-16-OL		UTILITIES	AS CONST. UTILITIES			PROJECT TOTALS	TOTALS AS CONST.	DIFF. +/-	% PLAN
			623	CONTROL WIRE 24 VOLT	LIN FT		410										410			
		R-1	623	24 STATION AUTOMATIC CONTROLLER	EACH		3										3			
		R-1	623	MASTER CONTROLLER	EACH		2										2			
			625	CONSTRUCTION SURVEYING	L S		1										1			
			626	MOBILIZATION	L S		.3			.7							1			
			627	THERMOPLASTIC PAVEMENT MARKING	SQ FT		11,484										11,484			
			627	PREFORMED PLASTIC PAVEMENT MARKING (60 MILS)	SQ FT		1,764										1,764			
				FORCE ACCOUNT ITEMS																
			F/A01	MINOR CONTRACT REVISIONS	F A		1										1			
			F/A02	ON-THE-JOB TRAINEE	EACH		4										4			
			F/A03	POTHOLING FOR UTILITIES	F A								1				1			
			F/A04	REPAIR, RESET AND MAINTENANCE OF EXISTING IRRIGATION SYSTEM	F A		1										1			
			F/A05	OBTAIN PHONE SERVICE FROM MOUNTAIN BELL FOR PERMANENT TRAFFIC COUNTER	F A		1										1			
			F/A06	REROUTE 6" WATER MAIN AROUND SIGN STRUCTURE FOOTINGS	F A								1				1			
			F/A07	DBE INCENTIVE PAYMENT	F A		.3			.7							1			

UD1(100 2)20SSUMADGN1
UDARPL DISSUPPF
DATE 14-JUL-1988 " TIME 14:51

SUMMARY OF IRRIGATION QUANTITIES

AS CONSTRUCTED		
NO REVISIONS ☐	REVISED ☐	VOID ☐

FED. ROAD REGION	DIVISION	PROJ. NO.	SHEET NO.	SHEET TOTALS
VIII	COLO.	IR25-2(208)	53	

DESIGN PH
DATE 5/86

IRRIGATION SUMMARY — I-1

SPRINKLERS

Symbol	Size	Item No.	Description	Unit	Riser	Pattern	GPM	Pressure LBS	Spacing FEET	Radius FEET	Project Quantity	Remarks
○	1 inch	623	Pop-up Rotary Sprinkler	Each	Plastic	360°	13.5	50	55	55	3	TORO 644-02-42
◒	1 inch	623	Pop-up Rotary Sprinkler	Each	Plastic	180°	13.5	50	55	55	1	TORO 642-02-42
◕	1 inch	623	Pop-up Rotary Sprinkler	Each	Plastic	90°	6.7	50	50	50	1	TORO 641-02-40
◕	1 inch	623	Pop-up Rotary Sprinkler	Each	Plastic	45°	6.7	50	50	50	1	TORO 640-02-40
△	1 inch	623	Shrubbery Spray & Flood Irrigator	Each	Plastic	360°	4.8	50	30	30	17	TORO XP-300S-F-5.0

PIPE

Symbol	Size	Item No.	Description	Unit	Remarks	Project Quantity
—	3 inch	619	Plastic Pipe (PVC)	Lin. Ft.	Class 200	200
—	2 inch	619	Plastic Pipe (PE)	Lin. Ft.		55
—	1.5 inch	619	Plastic Pipe (PE)	Lin. Ft.		150
—	1 inch	619	Plastic Pipe (PE)	Lin. Ft.		815

VALVES

Symbol	Size	Item No.	Description	Unit	Remarks	Project Quantity
▶◀	2 inch	623	Automatic Control Valve	Each		1
	#14	623	Control Wire (24 Volt)	Lin. Ft.		410

MISCELLANEOUS ITEMS

Symbol	Size	Item No.	Description	Unit	Remarks	Project Quantity

REVISIONS		
R-1 7-11-88	Controllers added	J.K.K.

GENERAL NOTES

1. The Contractor will not interrupt sprinkler system service to the NE, NW, SE, or SW quadrants of the interchange between April and October (inclusive).
2. The Contractor will be responsible for the immediate repair and maintenance of broken or damaged lines that irrigate the NE, NW, SE, or SW quadrants.
3. New or relocated valves, thrust blocks, etc., shall conform to the latest revision of the 'Denver Water Department Engineering Standards.'
4. Sprinkler system installation shall be coordinated with all other utility, lighting, and planting installation. Irrigation lines and heads shall be adjusted around piers, footings, or trees to maximize coverage.
5. The Contractor shall salvage and reset: one, 2-inch automatic control valve; two, 360° pop-up rotary sprinkler heads; and two, 180° pop-up rotary sprinkler heads. This work shall be paid for by Force Account.
6. R-1 The Contractor shall place the two Master Controllers and the three 24 Station Automatic Controllers as directed by the Engineer. Installation assistance may be available through the manufacturers local distributor.

CONTROLLERS R-1

Symbol	Size	Item No.	Description	Unit	Remarks	Project Quantity
—	—	623	24 Station Automatic Controller	Each	—	3
—	—	623	Master Controller	Each	—	2

DESIGNED BY	CHECKED BY	DETAILED BY	CHECKED BY	QUANTITIES BY	CHECKED BY	DATE	INITIAL

UD1:100.33LAND.DGN1
UDA1:PLOTS218L1A.PRF
DATE 18-MAR-1988 - TIME 09:38

STATE OF COLORADO
STATE DEPARTMENT OF HIGHWAYS
DIVISION OF HIGHWAYS
D. O. H. FORM NO. 126
REV. FEB. 1984

AS CONSTRUCTED		
NO REVISIONS	REVISED	VOID

FED. ROAD REGION	DIVISION	PROJ. NO.	SHEET NO.	SHEET TOTALS
VIII	COLO.	IR25-2(208)	83	

REVISIONS			
R-1	7-11-88	Added Light Support, Revised Sizes, Details and Dimensions.	JLS

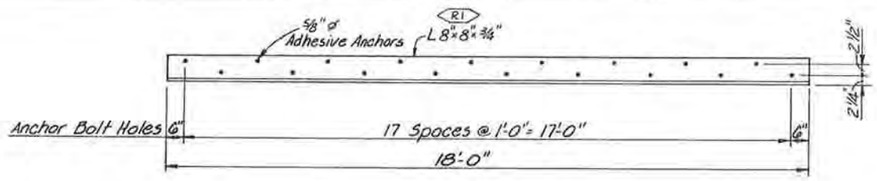

DETAIL I

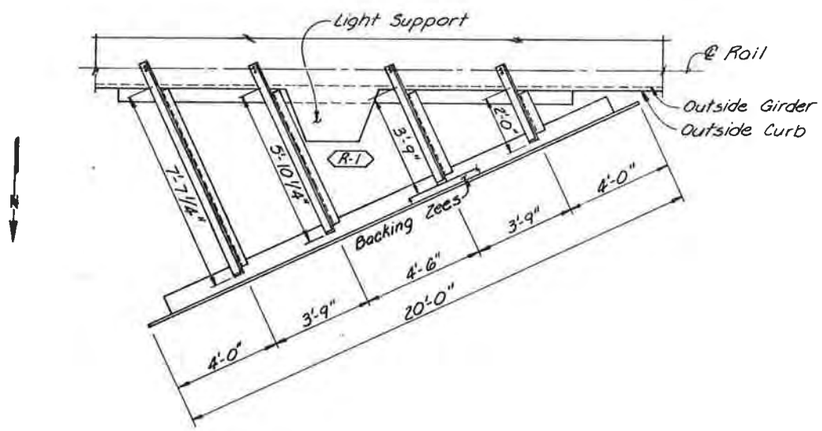

PLAN
Center Over I-25 Median
Adjust Slightly To Avoid Rail Posts

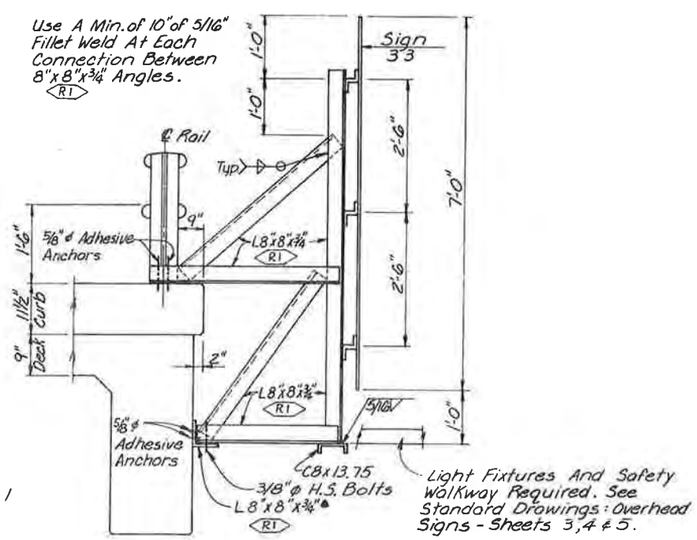

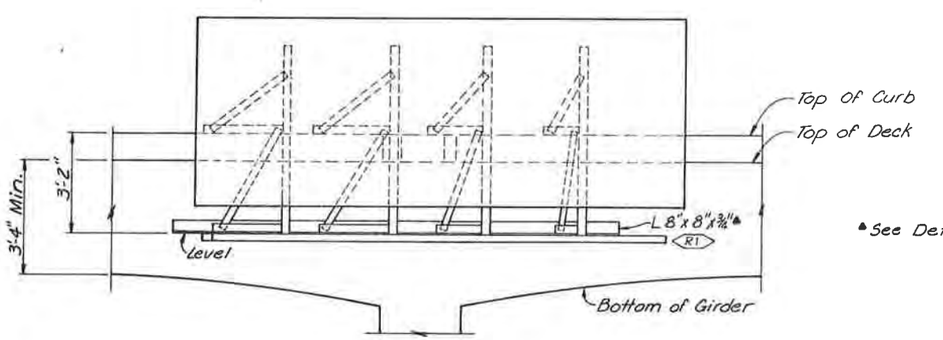

ELEVATION

• See Detail I

FRAME DETAIL

NOTES:

1. All Work Necessary to Mount Brackets Shall Be Paid As Item 614: Overpass Mounted Sign Bracket.
2. Applicable Specifications And Project Special Provisions Apply to This Work.
3. Contractor Shall Account For Dead Load Deflections And Construct Signs Level And Plumb.
4. All Structure Steel Shall Be ASTM A-36. R1
5. All Adhesive Anchors shall be 5/8" ø Hilti HVA, with 5" Standard Embedment Depth, or Approved Equal. R1

BRACKET FOR SIGN 33

OVERPASS MOUNTED SIGN BRACKET DETAILS