TYPE STUDY

Structure Carrying US 6 Over Bryant Street

Replacement of Bridge Structures F-16-EN & F-16-EM
at M.P. 284.126
Denver County, Colorado

Project Number: FBR 06A-050
Sub Account Number: 18192

August 21, 2012

Prepared for
Colorado Department of Transportation
Staff Bridge Design Region 6

PARSONS BRINCKERHOFF

Colorado Department of Transportation

TABLE OF CONTENTS

1. PROJECT DESCRIPTION 2
2. PROJECT GOALS AND OBJECTIVES 2
3. PROJECT SITE 3
4. EXISTING STRUCTURE 3
5. UTILITIES 4
6. ENVIRONMENTAL 4
7. GEOTECHNICAL 4
   - 7.1 Site Geology 4
   - 7.2 Foundation Design Parameters 5
8. ARCHITECTURAL REQUIREMENTS 6
9. BRIDGE DESIGN CRITERIA 6
   - 9.1 Design Specifications 6
   - 9.2 Design Method 6
   - 9.3 Design Loads 6
   - 9.4 Materials 7
   - 9.5 Deck Protection 7
10. DISCUSSION OF SUPERSTRUCTURE ALTERNATIVE 8
11. COST ANALYSIS SUMMARY 8

LIST OF APPENDICES

A. General Bridge Layouts and Typical Sections

B. Structure Inspection Report

C. Existing Bridge Photos

D. Geotechnical Report

E. Preliminary Cost Estimates

1. PROJECT DESCRIPTION

Many of the bridges in the Denver metro are currently rated as structurally deficient or functionally obsolete. It is imperative that the replacement of these bridges are identified and prioritized. Among the replacement candidates are structure numbers F-16-EN and F-16-EM, which carry eastbound and westbound US 6 over Bryant Street in CDOT Region 6.

This project involves the replacement of the US 6 Bridge over Bryant Street as part of the larger project of improvements to US 6 from approximately Federal Blvd to the BNSF bridge on the east side of I-25 in the City and County of Denver. The project includes adjustments to the existing US 6 roadway elevation and vertical clearance over Bryant Street in order to conform to current standards. The complete project generally includes replacements of the following structures: US 6 over the South Platte River, US 6 over Bryant Street, US 6 over Interstate 25, US 6 over the BNSF Railroad and Federal Boulevard Bridge over US 6. The project will also include improvements to the US 6 – Federal Boulevard interchange by providing a diamond type interchange at US 6 and Federal Boulevard while adding slip ramps to Bryant Street and a braided ramp from Federal Boulevard to eastbound US 6. Additional project improvements include upgrading Federal Boulevard between 5th and 7th Avenues, converting 5th Avenue east of Federal Boulevard into two-way traffic, revising portions of the South Platte River Trail to current standards, reconstructing US 6 from Federal Boulevard to the BNSF Railroad Bridge with collector-distributor roads or auxiliary lanes, in-kind replacements to impacted facilities at Barnum East Park, adding a bicycle/pedestrian bridge connecting North and South Barnum Park, and paving all structures between the north and south project limits of Interstate 25 and the east and west project limits of US 6.

2. PROJECT GOALS AND OBJECTIVES

The purpose of this project is to replace the existing US 6 bridge over Bryant Street. The new bridge must be cost effective and improve vertical clearance while minimizing impacts on all surrounding traffic.

The proposed replacement bridge consists of two new structures, the first to carry the east and west bound lanes of US 6 and the second to carry the east bound US 6 Collector-Distributer (CD) Road.

The proposed replacement bridge that supports two-way traffic on the mainline of US 6 has an out to out width of 188 feet – 3 inches. The eastbound travel way consists of a variable shoulder width between two 12-foot main lanes and one 15-foot off-ramp approach lane with a 12-foot inside shoulder and a 6-foot outside shoulder. Eastbound and westbound traffic will be separated by two feet of concrete barrier. Westbound traffic will travel in two 12-foot lanes with 12-foot shoulders on each side. The structure also accommodates a westbound on-ramp that is separated from the westbound main traffic by two feet of concrete barrier. The westbound on-ramp from Interstate 25 carries traffic in two to four 12-foot merging lanes. On-ramp lanes are bordered by a 4-foot inside

shoulder and a 12-foot minimum outside shoulder of varying width. Each exterior edge of the bridge supports a CDOT Bridge Rail Type 7.

The eastbound US 6 CD Road Bridge is 66 feet – 6 inches wide and carries three 12-foot lanes and one variable width lane. Shoulder widths vary on both sides of the bridge, and each edge supports a CDOT Bridge Rail Type 7.

The vertical clearance under the existing structure is 15 feet – 6 inches. The profile grade of US 6 over Bryant Street must be raised in order to meet the required minimum vertical clearance of 16 feet – 6 inches over the traveled way, as required by *Book 2- Technical Requirements, Article 15.2.3.1*.

3. PROJECT SITE

The bridge containing structures F-16-EN and F-16-EM is located in the City of Denver on U.S. Route 6, milepost 284.126, about one-third of a mile west of I-25. Within Denver city limits, US 6 is an east – west freeway known as 6th Avenue that connects Denver to Golden. The replacement structures will be located within the existing CDOT right-of-way (ROW) at the same location where the original structure was constructed.

The US 6 bridge is perpendicularly aligned over Bryant Street. As part of the larger US 6 project, the roadway of Bryant Street also has proposed revisions. Improvements to Bryant Street include the addition of 5 feet wide sidewalks and 7 feet wide bike lanes on both sides of the road. The roadway of Bryant Street will also include three 12-foot traffic lanes, 6-inch curbs and 8-foot wide clear zones on both sides.

4. EXISTING STRUCTURE

Originally built in 1958, the US 6 bridge over Bryant Street underwent widening construction in 1967. The out to out width of the existing structure is 146 feet. North of the bridge centerline, five lanes of westbound traffic are carried by structure number F-16-EM, and south of the bridge centerline, five lanes of eastbound traffic are carried by structure number F-16-EN.

The structure is a three span continuous bridge with reinforced concrete girders of variable depth and a cast-in-place (CIP) concrete deck. The 158 foot long bridge structure comprises an approximate span configuration of 43 feet – 72 feet – 43 feet.

The CIP concrete piers and abutments are supported on shallow spread footings. The bridge was constructed perpendicular to the Bryant Street alignment.

December 28, 2009 dates the latest structure inspection. The existing bridge is categorized as Structurally Deficient (SD) and has a Sufficiency Rating of 44.3 and is on the Colorado Bridge Enterprise list for replacement.

The “Structure Inspection and Inventory Report” (Appendix B) desribes deteriorating girder bottoms with exposed reinforcing bar corrosion. Several stirrups have 100 percent section loss and some longitudinal bars have 25 percent section loss. Exterior girders have shear cracking at two to three foot spacing. The reinforced concrete columns exhibit dalamination, spalling and deterioration with exposed reinforcing corrosion. Some of the columns have bearing loss up to 15 percent. Photographs of the structural damage described above can be seen in Appendix C.

5. UTILITIES

The utilities under the existing bridge includes a 15” storm sewer that travels east-west, an 18” storm sewer that travels north-south, a 12” water line traveling north-south and an Xcel power line traveling east-west.

At this time, utility requirements and documents are being developed. Several utilities exist within the geographical limits of the project. Ownership includes Xcel, Denver Metro Wastewater and The Denver Water Department. Applicable utility constraints will be coordinated with the respective companies to minimize disruptions during construction.

6. ENVIRONMENTAL

Potential environmental impacts identified as of July, 2012 for the Bryant Street Bridge include Air Quality, Noise, Construction Noise, Historic Resources, Parks and Recreation, Vegetation, Visual, Wildlife and Hazmat. The required mitigation commitments and permits required for the project can be found in *Book 2- Technical Requirements, Section 5- Environmental Requirements*.

7. GEOTECHNICAL

The following preliminary geotechnical foundation discussion is based on the *Geotechnical Memorandum* prepared by RockSol Consulting Group, Inc. and is provided in Appendix D.

Geotechnical information reviewed primarily consisted of engineering geology sheets and borehole logs, from which the depth to bedrock was interpreted based on material descriptions. In addition, the bearing capacity of the bedrock was evaluated, based on available blow count data obtained during drilling and sampling from the previous explorations.

7.1 Site Geology

Based on the borehole logs, overburden soils consist of fill materials associated with development of the project area, especially roadway construction for US 6 and I-25,

and native soils consisting of clay, sands, and gravel. The native sands are generally characterized as medium dense and the clays generally characterized as medium stiff to stiff. Some boreholes encountered material identified as "trash". Sedimentary bedrock was encountered in most boreholes and primarily consisted of claystone with sandstone also encountered in several borings. Groundwater was encountered within the native soils at elevations around 5,190 feet in the vicinity of the Bryant Street Bridge.

Boreholes indicate the lowest bedrock elevation is noted in the vicinity of the Bryant Street Bridge at approximately 5,170 feet.

7.2 Foundation Design Parameters

Drilled Shafts

Drilled shafts will provide axial support by embedment into sedimentary bedrock. Based on their evaluation, RockSol suggests a nominal base resistance of 135 kips per square foot (ksf) and a nominal side resistance of 13.5 ksf for use with Load and Resistance Factor Design (LRFD) methods.

Due to the anticipated depth to bedrock at the proposed bridge locations, the side resistance is applicable to the entire portion of the shaft embedded in competent bedrock. Side resistance in the soil zone above competent bedrock should be neglected. For LRFD strength limit state evaluation, a resistance factor of 0.55 is recommended for base/ tip resistance and a resistance factor of 0.60 is recommended for side resistance evaluation for redundant single shafts. Per *AASHTO LRFD Section 10.5.5.2.4*, the resistance factors for base/tip and side resistance should be reduced by 20 percent for non-redundant single shafts.

A minimum shaft penetration into competent bedrock of 10 feet is suggested for drilled shafts less than 5 feet in diameter. For drilled shafts 5 feet and greater in diameter, a minimum penetration of 15 feet is recommended. A minimum shaft diameter of 36 inches is suggested for axial load resistance for piers.

Driven Piles

Alternatively, driven piles (Grade 50 steel H-pile is assumed) may be considered for the proposed bridges, including the abutments. Evaluation of the effect of pile driving on existing foundations should be considered. RockSol recommends the piles be driven to refusal in the bedrock. Based on anticipated subsurface conditions, practical refusal is estimated to occur within approximately 5 feet of penetration into competent bedrock. Pile driving shall be monitored per CDOT requirements. Monitoring shall be conducted using a Pile Driving Analyzer (PDA) to determine the condition of the pile, the efficiency of the hammer and the static bearing capacity of the pile, and to establish the pile driving criteria.

For the LRFD method, a nominal (ultimate) capacity of 37.5 kips per square inch (ksi), based on the cross section area of the pile, can be used for Grade 50 steel. A resistance factor of 0.65 is recommended for LRFD strength limit state design for axial compression.

8. ARCHITECTURAL REQUIREMENTS

There are no architectural requirements dictated for this bridge although all formed concrete surfaces will have a Class 1 finish (Ordinary Surface Finish) and/or all exposed concrete surfaces will be coated per Standard Specification 509, color to be determined. See project Technical Requirements for additional information.

9. BRIDGE DESIGN CRITERIA

9.1 Design Specifications

The following design criteria were used to evaluate the structure alternatives:

American Association of State Highway and Transportation Officials (AASHTO), *AASHTO LRFD Bridge Design Specifications*, 6th Edition, 2012.

Colorado Department of Transportation (CDOT), *Bridge Design Manual* and "Technical Memorandums", 2009 Revision.

CDOT, *Bridge Detail Manual*, 2012 Revision.

CDOT, *CADD Manual*, 2011 Edition.

CDOT, *Bridge Rating Manual*, 1995 Edition.

CDOT, *Standard Specifications for Road and Bridge Construction*, 2011 Edition.

9.2 Design Method

This project shall be designed for applicable strength, service, and extreme event limit states as defined by the load groups in the AASHTO LRFD Bridge Design Specifications.

9.3 Design Loads

9.3.1 Permanent Loads (DC, DW)

Unit Weight Reinforced Concrete	150 pcf
Unit Weight Prestressed Concrete	155 pcf
HBP	36 psf
Utilities (future and existing)	100 lb/lf

Hot Mix Asphalt	140 pcf

9.3.2 Live Loads Roadway Bridge

HL-93 (Design Truck or Tandem with Design Lane Load)
Colorado Permit Vehicle (Strength II)

9.3.3 Bridge Rail

Bridge Rail Type 7	486 lb/lf

9.3.4 Wind Loads

AASHTO LRFD Bridge Design Specifications

9.3.5 Thermal Forces (TU)

Thermal Coefficient	0.000006 / ^{o}F
Body Temperature Range	0° F to 80°F (Temperature rise and Design Parameters of 45° F; Temperature drop of 60° F)

9.3.6 Creep and Shrinkage (CR, SH)

In accordance with AASHTO LRFD Bridge Design Specifications
Long Term Camber in accordance with ACI-318 (92)

9.3.7 Extreme Event (EQ)

Earthquake effects in accordance with AASHTO LRFD Bridge Design Specifications, Seismic Performance Zone 1

9.4 Materials

Precast Prestressed Concrete	f'_c = 7500 psi (max)
	f'_{ci} = 6500 psi (max)
Reinforced Concrete	Class D, f'_c = 4500 psi
	Class B, f'_c = 3000 psi
Reinforcing Steel	ASTM A-615, Grade 60
Prestressing Steel	ASTM A-416 Grade 270, Low Relax

9.5 Deck Protection

Three inches Hot Bituminous Pavement (H.B.P.) over waterproofing membrane on bridge deck and approach slabs

10. DISCUSSION OF SUPERSTRUCTURE ALTERNATIVE

The superstructure alternative considered in this report for both bridge structures over Bryant Street is a single span arrangement with a span of approximately 93 feet between centerlines of the bearings, and a total length of approximately 96 feet. The span distance provides sufficient width for the proposed Bryant Street roadway, while also providing additional clear distance for the proposed bike lanes and sidewalks on each side of Bryant Street.

The investigated superstructure alternative is comprised of 54 inch Colorado prestressed concrete bulb-T (BT54) girders with a 9 inch cast in place concrete deck and CDOT Bridge Rail Type 7 along exterior deck edges. Preliminary analysis of the US 6 mainline bridge over Bryant Street indicates that 14 girders spaced at 13 feet – 10 inches are required. The minimum superstructure depth for the mainline bridge is about 5 feet – 7 inches. Preliminary analysis of the US 6 CD Road Bridge over Bryant Street indicates that 6 girders spaced at 11 feet – 9 inches would meet the design requirements. The minimum superstructure depth for the CD Road Bridge is about 5 feet – 6 inches. The vertical clearance for the current profile and the use of the CDOT BT54 girders is 18 feet – 6 inches.

11. COST ANALYSIS SUMMARY

The total estimated cost of construction for the replacement of the Bryant Street Bridge is $2,443,653, about $100.00 per square foot. The US 6 mainline structure has a total cost estimate of $1,697,682, about $94.00 per square foot, while the bridge carrying the US 6 CD Road has a total cost estimate of $745,971, about $117.00 per square foot. Note that expenses for riprap and structure excavation for riprap are not included in this estimate. Costs associated with the predrilling of piles, which may be required, are also excluded. Details of the above projected construction costs are itemized and provided in Appendix E.

APPENDIX A

General Bridge Layouts and Typical Sections

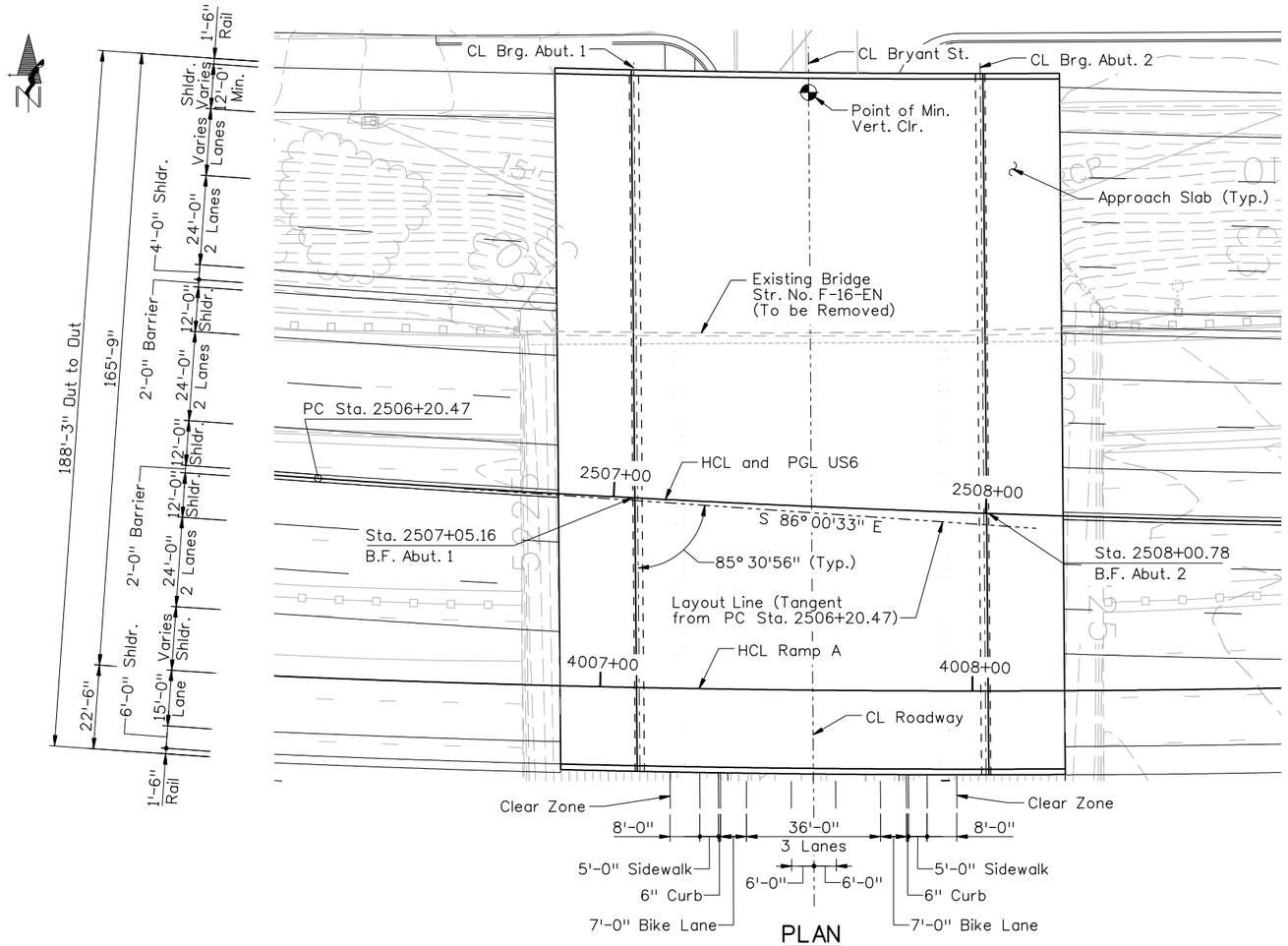

PLAN

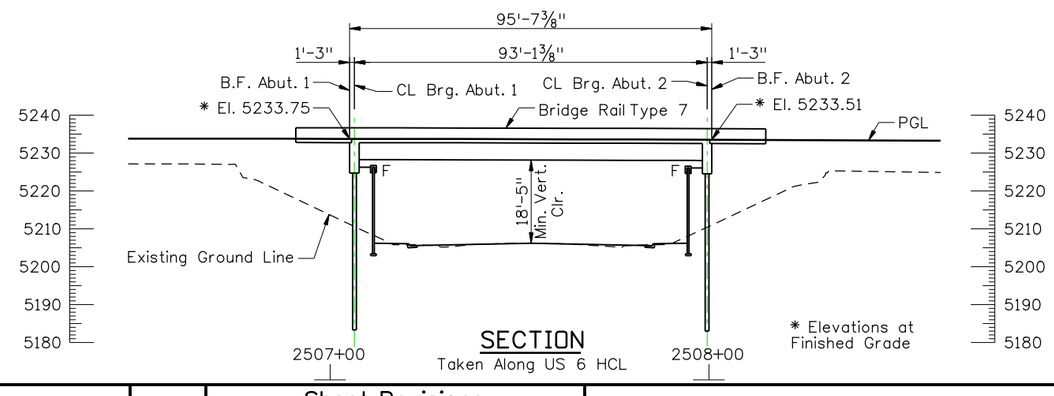

SECTION

Taken Along US 6 HCL

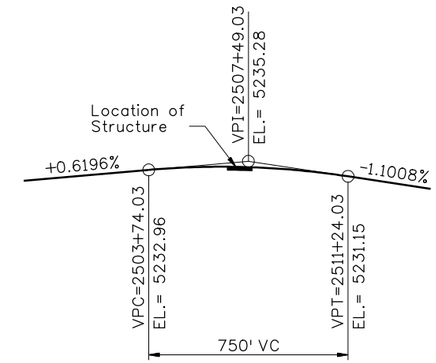

US 6 PROFILE GRADE

US 6 CURVE DATA

P.I. Sta. = 2510+73.04
Δ = 9° 57'03" (LT)
D = 1° 06'08"
L = 902.86'
T = 452.57'
R = 5198.61'
P.C. Sta. = 2506+20.47
P.T. Sta. = 2515+23.33

RAMP A CURVE DATA

P.I. Sta. = 4007+29.36
Δ = 6° 07'27" (LT)
D = 1° 18'09"
L = 470.14'
T = 235.29'
R = 4398.46'
P.C. Sta. = 4004+94.07
P.T. Sta. = 4009+64.20

Print Date: 7/30/2012	Sheet Revisions			Colorado Department of Transportation	As Constructed
File Name: 18192_BryantGlt01.dgn	Date:	Comments	Init.	8833 South Wadsworth Court Littleton, CO 80128 Phone: 303-972-9112 FAX: 303-972-9114	No Revisions:
Horiz. Scale: 1:40 Vert. Scale: As Noted				Region 6 HC	Revised:
Unit Information Unit Leader Initials					Void:

R-X

US 6 OVER BRYANT ST
GENERAL LAYOUT

Designer:	Structure Numbers	F-16-ZA
Detailer:		
Sheet Subset:	Subset Sheets:	of

Project No./Code
US 6 BRIDGES DESIGN BUILD PROJECT
18838
Sheet Number

Gattshall 2:36:04 PM j:\184024a us 6 bridges\5.0 project data\18192\bridge\drawings\18192_BryantGlt01.dgn
7/30/2012

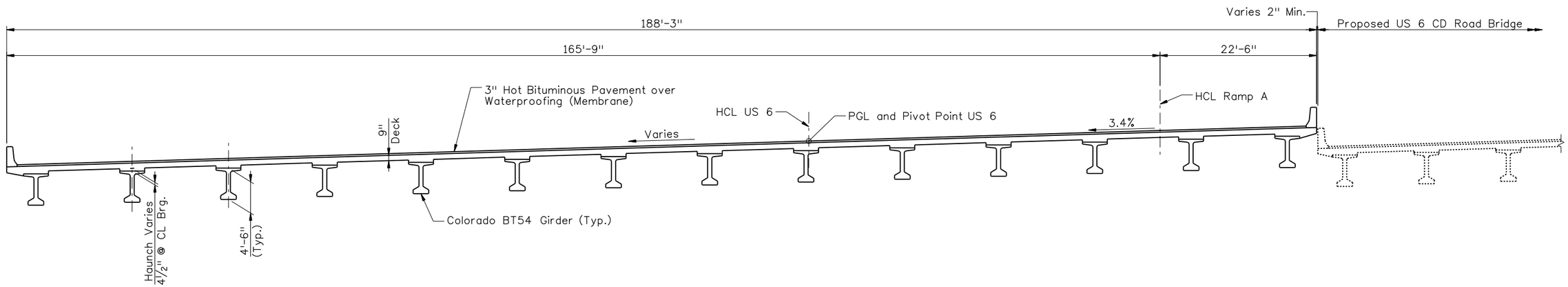

TYPICAL SECTION

Print Date: 7/30/2012		Sheet Revisions			Colorado Department of Transportation	As Constructed	US 6 OVER BRYANT ST TYPICAL SECTION	Project No./Code
File Name: 18192_BryantTyp01.dgn		Date:	Comments	Init.	8833 South Wadsworth Court Littleton, CO 80128 Phone: 303-972-9112 FAX: 303-972-9114	No Revisions:		US 6 BRIDGES DESIGN BUILD PROJECT
Horiz. Scale: 1:15	Vert. Scale: As Noted	R-X				Revised:	Designer:	Structure Numbers F-16-ZA	18838
Unit Information	Unit Leader Initials				Region 6 HC	Void:	Detailer:		Sheet Number
							Sheet Subset:	Subset Sheets: of	

Gattshall 2:36:08 PM j:\184024a us 6 bridges\5.0 project data\18192\bridge\drawings\18192_BryantTyp01.dgn
7/30/2012

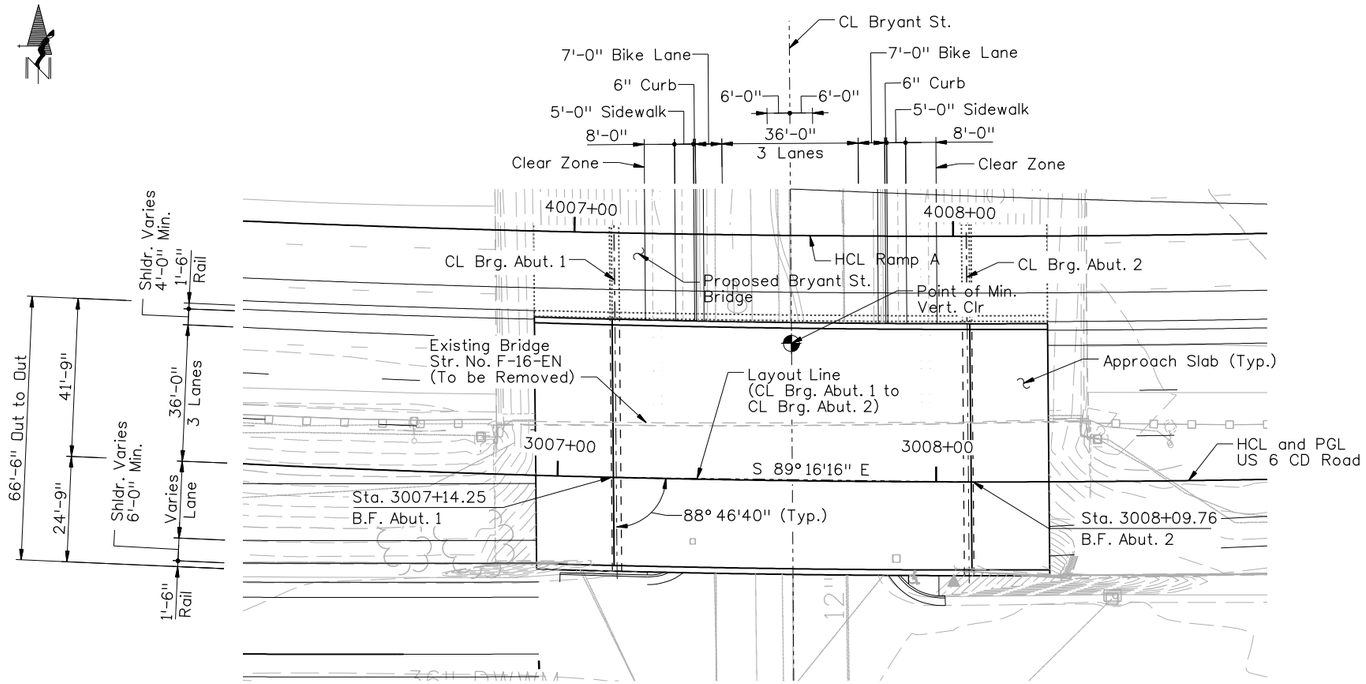

PLAN

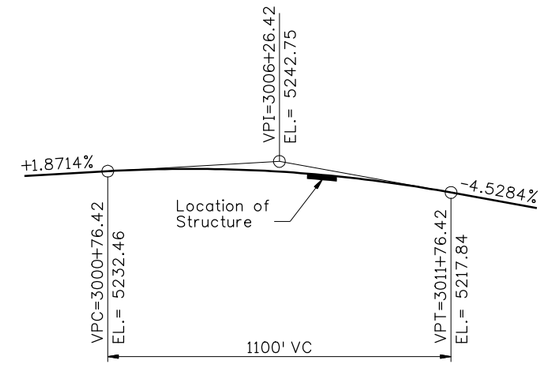

PROFILE GRADE

US 6 CD ROAD CURVE DATA

P.I. Sta. = 3007+18.29
△ = 5°16'49" (LT)
D = 1°25'06"
L = 372.33'
T = 186.30'
R = 4040.00'
P.C. Sta. = 3005+31.99
P.T. Sta. = 3009+04.32

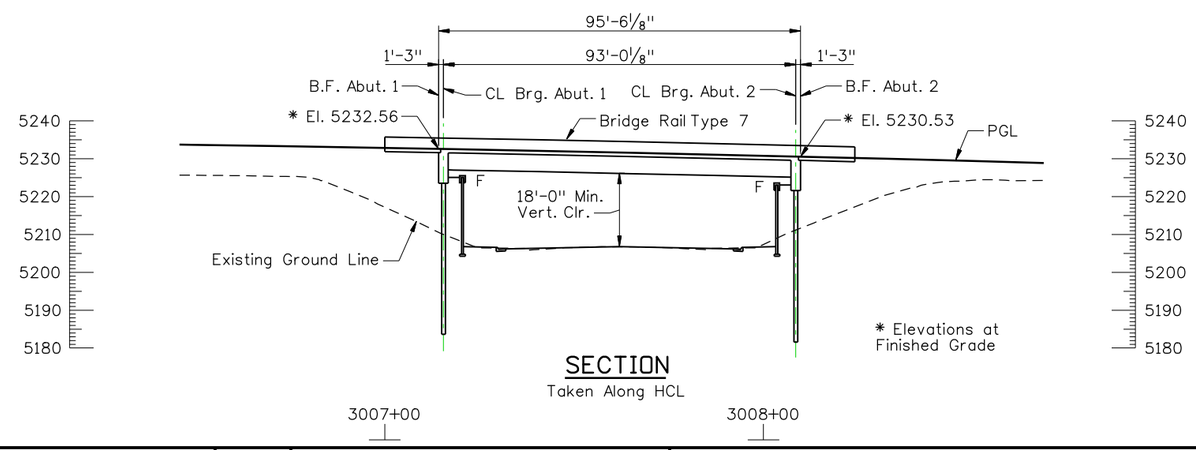

SECTION
Taken Along HCL

Print Date: 7/30/2012	Sheet Revisions	Colorado Department of Transportation	As Constructed	US 6 CD ROAD OVER BRYANT ST GENERAL LAYOUT		Project No./Code
File Name: 18192_BryantCDGlt01.dgn	Date: / Comments / Init.	8833 South Wadsworth Court Littleton, CO 80128 Phone: 303-972-9112 FAX: 303-972-9114	No Revisions:			US 6 BRIDGES DESIGN BUILD PROJECT
Horiz. Scale: 1:40 Vert. Scale: As Noted	R-X		Revised:	Designer:	Structure Numbers F-16-ZB	18838
Unit Information Unit Leader Initials		Region 6 HC	Void:	Detailer:		Sheet Number
				Sheet Subset:	Subset Sheets: of	

Gottshall 2:36:16 PM j:\184024o us 6 bridges\5.0 project data\18192\bridge\drawings\18192_BryantCDGlt01.dgn
7/30/2012

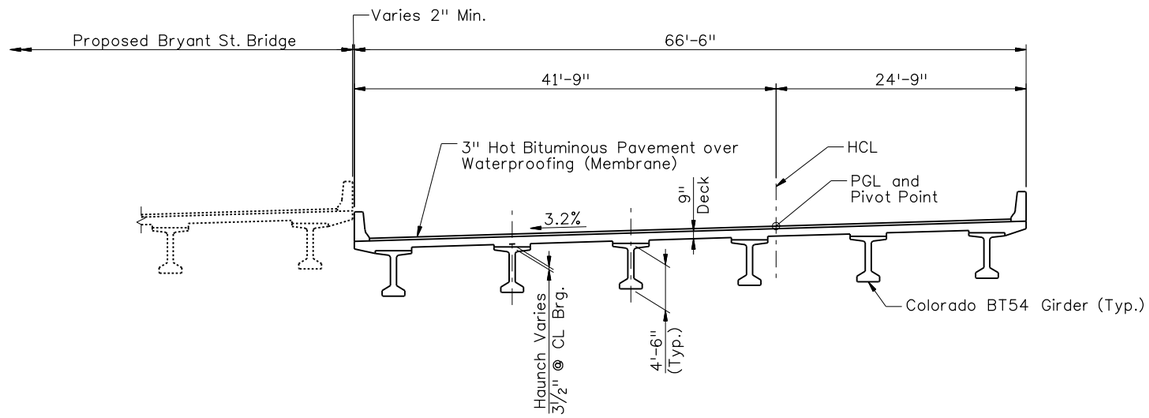

TYPICAL SECTION

Print Date: 7/30/2012		Sheet Revisions			Colorado Department of Transportation	As Constructed	US 6 CD ROAD OVER BRYANT ST TYPICAL SECTION	Project No./Code
File Name: 18192_BryantCDTyp01.dgn		Date:	Comments	Init.		No Revisions:		US 6 BRIDGES DESIGN BUILD PROJECT
Horiz. Scale: 1:15 Vert. Scale: As Noted	R-X				8833 South Wadsworth Court Littleton, CO 80128 Phone: 303-972-9112 FAX: 303-972-9114	Revised:	Designer: / Structure Numbers	F-16-ZB	18838
Unit Information Unit Leader Initials					Region 6 HC	Void:	Detailer:		Sheet Number
							Sheet Subset:	Subset Sheets: of	

Gottshall 2:36:21 PM j:\184024a us 6 bridges\5.0 project data\18192\bridge\drawings\18192_BryantCDTyp01.dgn
7/30/2012

APPENDIX B

Structure Inspection Report

Highway Number (ON) 5D: 006G _

Mile Post (ON)11: 284.126 mi

Colorado Department of Transportation
Structure Inspection and Inventory Report (English Units)

Bridge Key: F-16-EN | Inspection Date: 12/28/2009 | Sufficiency Rating: 44.3 SD

Rgn/Sectn 2E/2M:	68	Hist Signif 37:	5	UW Inspection Date 93B	
Trans Region 2T	02	Posting status 41:	A	SI Date 93C:	
County Code 3:	031	Service on/un 42A/B:	1 1	Bridge Cost 94:	$ 3,655,520
DENVER		Main Mat/Desgn 43A/B:	2 4	Roadway Cost 95:	$ 365,552
Place Code 4:	20000	Appr Mat/Desgn 44A/B:	0 0	Total Cost 96:	$ 5,483,280
DENVER		Main Spans Unit 45:	3	Year of Cost Estimate 97:	2006
Rte.(On/Under)5A:	1	Approach Spans 46:	0	Brdr Brdg Code/% 98A/B:	
Signing Prefix 5B:	2	Horiz Clr 47:	70.0 ft	Border Bridge Number 99	
Level of Service 5C:	1	Max Span 48:	72.2 ft	Defense Highway 100:	0
Directional Suffix 5E:	0	Str Length 49:	158.0 ft	Parallel Structure 101:	N
Feature Intersected 6:		Curb Wdth L/R 50A/B:	1.3 ft 1.3 ft	Direction of Traffic 102	2
BRYANT STREET		Width Curb to Curb 51	140.0 ft	Temporary Structure 103	_
Facility Carried 7:		Width Out to Out 52:	146.0 ft	Highway System 104:	1
US 6 ML		Deck Area:	23,077.8 sq. ft	Fed Lands Hiway 105:	0
Alias Str No.8A:		Min Clr Ovr Brdg 53:	99.99	Year Reconstructed 106	1967
		Min Undrclr Ref 54A:	H	Deck Type 107:	1
Prll Str No. 8P		Min Undrclr 54B:	15.5 ft	Wearing Surface 108A	6
F-16-EM		Min Lat Clrnce Ref R 55A	H	Membrane 108B:	0
Location 9:		Min Lat Undrclr R 55B	12.5 ft	Deck Protection 108C:	0
IN DENVER		Min Lat Undrclr L 56:	0.0 ft	Truck ADT 109:	2 %
Max Clr 10:	328.1 ft	Deck 58:	5	Trk Net 110:	1
BaseHiway Net12:	1	Super 59:	4	Pier Protection 111:	#
IrsinvRout 13A	000000006G	Sub 60:	4	NBIS Length 112:	Y
IrssubRout No13B:	00	Channel/Protection 61:	N	Scour Critical 113:	N
Latitude 16:	39d 43' 30"	Culvert 62:	N	Scour Watch 113M:	0
Longitude 17:	105d 01' 07"	Oprtng Rtg Method 63:	1 LF Load Fact	Future ADT 114:	167,671
Range18A:	68 W	Operating Rating 64:	39.0	Year of Future ADT 115	2025
Township18B:	68	Inv Rtng Method 65:	1	CDOT Str Type 120A:	CSGC
Section18C:	8	Inventory Rating 66:	23.0	CDOT Constr Type 120B	5.
Detour Length 19:	2.0 mi	Asph/Fill Thick 66T:	003 "in"	Inspection Indic 122A:	
Toll Facility 20:	3	Str. Evaluation 67:	4	Inspection Trip 122AA	
Custodian 21:	1	Deck Geometry 68:	6	Scheduling Status 122B	
Owner 22:	1	Undrclr Vert/Hor 69:	7	Maintenance Patrol 123	7
Functional Class 26:	12	Posting 70:	5	Expansion Dev/Type124	O
Year Built 27:	1958	Waterway Adequacy 7	N	Brdg Rail Type/Mod 125A/B	Y 3
Lanes on 28A:	10	Approach Alignment 72:	8	Posting Trucks 129A/B/C	0 0 0
Lanes Under 28B:	4	Type of Work 75A:	31	Str Rating Date 130:	9/10/1998
ADT 29:	140,900	Work Done By 75B:	1	Special Equip 133:	
Year of ADT 30:	2005	Length of Improvment 76	158.1 ft	Vert Clr N/E 134A/B/C	X 99.99 0.00
Design Load 31:	6	Insp Team Indicator 90B	GREEN TEAM (	Vert Clr S/W 135A/B/C	X 99.99 0.00
Apr Rdwy Width 32:	132.0 ft	Inspector Name 90C:	TATALASKIT	Vertical Clr Date:	12/27/1999
Median 33:	2	Frequency 91:	24 months	Weight Limit Color: 139	0
Skew 34:	0.00 °	FC Frequency 92A:	-1	Str Billing Type:	U
Structure Flared 35:	0	UW Frequency 92B:	-1	Userkey 1 - System:	ONSYS
Sfty Rail 36a/b/c/d:	1 1 1 1	SI Frequency 92C:	-1	Userkey 7-Update Indi	
Rail ht36h:	37 "in"	FC Inspection Date 93A:			

Inspector Name: TATALASKIT

Colorado Department of Transportation
Structure Inspection and Inventory Report (English Units)

Element Inspection Report

Elm/Env	Description	Units	Total Qty	% in 1	CS 1	% in 2	CS 2	% in 3	CS 3	% in 4	CS 4	% in 5	CS 5
13/4	Unp Conc Deck/AC Ovl	(SF)	23,080	0 %	0	100 %	23,080	0 %	0	0 %	0	0 %	0
110/4	R/Conc Open Girder	(LF)	2,593	51 %	1,313	9 %	238	35 %	912	5 %	130	0 %	0
205/4	R/Conc Column	(EA)	32	78 %	25	9 %	3	3 %	1	9 %	3	0 %	0
215/4	R/Conc Abutment	(LF)	292	100 %	292	0 %	0	0 %	0	0 %	0	0 %	0
234/4	R/Conc Cap	(LF)	280	99 %	278	0 %	1	0 %	0	0 %	1	0 %	0
301/4	Pourable Joint Seal	(LF)	292	75 %	219	25 %	73	0 %	0	0 %	0	0 %	0
308/4	Constr Non Exp Jt	(LF)	632	0 %	0	0 %	0	100 %	632	0 %	0	0 %	0
321/4	R/Conc Approach Slab	(EA)	2	100 %	2	0 %	0	0 %	0	0 %	0	0 %	0
325/4	Slope Prot/Berms	(EA)	2	100 %	2	0 %	0	0 %	0	0 %	0	0 %	0
326/4	Bridge Wingwalls	(EA)	4	100 %	4	0 %	0	0 %	0	0 %	0	0 %	0
331/4	Conc Bridge Railing	(LF)	158	100 %	158	0 %	0	0 %	0	0 %	0	0 %	0
334/4	Metal Rail Coated	(LF)	316	100 %	316	0 %	0	0 %	0	0 %	0	0 %	0
338/4	Conc Curbs/SW	(LF)	474	49 %	230	34 %	160	18 %	84	0 %	0	0 %	0
359/4	Soffit Smart Flag	(EA)	1	0 %	0	0 %	0	100 %	1	0 %	0	0 %	0
362/1	Traf Impact SmFlag	(EA)	2	0 %	0	100 %	2	0 %	0	0 %	0	0 %	0

Elem/Env	Description	Element Notes
13/4	Unp Conc Deck/AC Ovl	2 inches asphalt. Some raveling and longit. cracking in MLs. A few patched potholes in MLs #4 & #5 in Span 3 of EBnd direction.
110/4	R/Conc Open Girder	Doubled girders C & D, G & H, J & K and N & O have mod. deter on the bottoms w/ exposed corr rebar due to leaking longit constr jts over them. At least 12 stirrups at midspan of gir. 1C, and 2 stirrups of Gird 1D have 100% section loss and some longit. bars have approx. 25% section loss. Six stirrups of 3C broken. Exposed bars in these areas up to 25 % section loss. Some areas of exposed rebar have significant section loss, and spalling extends behind main reinforcing. See Girder Tally Sheet and PHOTOS. Light horiz crack on rt. side of girder 2F is propagating from vert. crack at pier cap/gir. jct, see 12/14/03 photo. Exterior girders have diag. shear cracking at 2 - 3 foot spacing 20 feet +/- from piers. 2A & 2B have minor high load impact damage w/ exposed rebar and all girders in span 2 have minor dings, NB & SB Lanes.
205/4	R/Conc Column	Delams., Spalling and Moderate Deter. w/ exposed corr. rebar at Cols. 2D, 2M, 3D and 3M. A few broken ring bars at Col. 2D. See photos. Tops of Cols. w/ Brg Loss; Fwd face of 2M 15%, 3D 15% at rear and 10% at fwd total 25%. See photos. Cols. 2J, 3G, and 3H have minor delam. cracks at top. Others are waterstained.
215/4	R/Conc Abutment	Light efflor @ horiz crack @ deck junction, bays 1C & 1E. Both abuts look ok. Trash building up at both abutments from transients.

Colorado Department of Transportation
Structure Inspection and Inventory Report (English Units)

Elem/Env	Description	Element Notes
234/4	R/Conc Cap	P-2 cap has 1/4 inch vert crack along junction with gir 1F & 2F at rt. side and propagates 6 inches into rt. side of gir 2F, see 12/14,01 photo. P-2 cap has hairline vert crack in center of bay K. P-3 cap has hairline vert crack in center of bay L.
301/4	Pourable Joint Seal	Assumed between approach slabs and abuts. Covered with asphalt and cracked majority of length in EBnd MLs at A1. Light cracking in a couple MLs at other locations.
308/4	Constr Non Exp Jt	Longit joints between girders C & D, J & K and N & O. Plans did not call for any filler. Have leaked bad in the past causing deter on the bottom of the girders mentioned above.
321/4	R/Conc Approach Slab	Covered with asphalt and in same condition as deck.
325/4	Slope Prot/Berms	Conrete slope paving with dirt berms at both abuts. Berms settled to slightly below bottom of abut caps with a couple exposed steel H piles. Very few cracks in concrete panels.
326/4	Bridge Wingwalls	Stubs. Look ok.
331/4	Conc Bridge Railing	Jersey barrier in median. Several vert. cracks.
334/4	Metal Rail Coated	Galv. type Y rail. Looks good.
338/4	Conc Curbs/SW	Includes lane divider in WBL. Outside face of rt in span 2 spalled with exposed corr. rebar. Spalling with exposed corr. rebar and delam. cracking on backside of lt @ A-1. Longit cracks on inside and outside faces and other cracks on tops with spots of scale.
359/4	Soffit Smart Flag	Hairline to light trans cracks, some w/ efflor and light rust stains. Delaminated/spalling deck bottom in a few bays near abutments: Bay 1A near A1 has 40 sf, Bay 3D near A4 has 25 sf, and Bay 3P near A4 has 50 sf. 4.5 sq ft spalls w/ exposed rebar and delam. in bay 1C near A-1 and bay 1J near P-2. Map cracking w/ efflor and light rust stains in bays 1A, 1O, 1P, 2A, 2B, 2D, 2I, 2O, 2P, 3A, 3B, 3D, 3E & 3P. See 12/09 Sketch. Estimate 20% total deck contaminated.
362/1	Traf Impact SmFlag	Girders 2A and 2B have impact damage above S.Bnd lane. Approx. 1 ft spall at each with 2 inches of exposed rebar on 2B. IMP-MM/?/YY, ISP-12/17/03, REP-00/00/00.

Maintenance Activity Summary

MMS Activity	Description	Recommended	Status	Target Year	Est Cost
*354.02	Suprstr	12/14/2001	-1	2011	30000

Repair the bottoms of doubled Girders C & D, G & H, J & K and N & O where deterioration with exposed corroded rebar exists and remove loose concrete as necessary.

Colorado Department of Transportation
Structure Inspection and Inventory Report (English Units)

Maintenance Activity Summary

MMS Activity	Description	Recommended	Status	Target Year	Est Cost
398	Misc Br Wk	12/14/2001	-1	2003	0

Remove loose concrete from girders 2-C, 2-D, 2-G, 2-N and 2-O.

354.01	Replace	12/19/2003	-1	2003	200

Patch spalls created by impact at girders 2A and 2B.

358.05	Substr	12/14/2001	-1	2003	0

Repair Pier columns 2D, 2M, 3D and 3M where deterioration with exposed corroded rebar exists.

358.05	Substr	1/29/2008	-1	2011	25000

Remove delaminated concrete from columns 2D, 2M, 3D and 3M, sand blast rebar and patch.

353.01	Br Dk Rpr	12/28/2009	-1	2011	30000

Seal longitudinal construction jts. where bridge was widened and median closed off to stop deterioration of girders below.

Colorado Department of Transportation
Structure Inspection and Inventory Report (English Units)

Bridge Notes

Utilities: 3 - 2.5 inch diameter metal conduits in overhangs, 1 at left and 2 at right.
A few broken wooden spacer blocks at transition rail at Rt. rear corner.
Mod. trans. and D cracking at ends of approach slabs with appr. roadway.

Inspection Notes

Time: 10:45	**Temp: 30**	**Weather: Clear**

Scope:

☑ **NBI:** ☑ **Element:** ☐ **Underwater:** ☐ **Fracture Critical:** ☐ **Other:** **Type:** Regular NBI

Inspector: TATALASKIT **Inspection Team:**

Inspection Date: 12/28/2009

Inspector

Inspector

APPENDIX C

Existing Bridge Photos

			file_size	
	F16EN Spalling with exp corr reinforcing and some broken stirrups on Girds 2C & 2D.JPG taken: 2009/12/289 12:	posted: 2010/01/26	742171	\\public\
	F16EN Spalling with exp corr reinforcing and several broken stirrups on Girds 1C & 1D.JPG taken: 2009/12/289 11:	posted: 2010/01/26	807191	\\public\

	F16EN Spalling with exp corr rebar along outside face of Lt curb in Span 1.JPG taken: 2009/12/289 11:	posted: 2010/01/26	784646	\\public\
	F16EN Mod delam cracking along inside and outside faces of curb, this is Rt side Span 1.JPG taken: 2009/12/289 11:	posted: 2010/01/26	490114	\\public\

	F16EN Map cracking with mod efflor and rust, this is Bays 2A & 2B.JPG taken: 2009/12/289 12:	posted: 2010/01/26	705969	\\public\
	F16EN Mod spalling of Col. 2D, Gir. 2C.JPG taken: 2008/01/30 6:28	posted: 2008/01/30	1433977	

	F16EN Mod. spalling and deter. rear face of Col. 2D.JPG taken: 2008/01/30 6:26	posted: 2008/01/30	1481938
	F16EN Moderate spalling and deter. of Col. 2D, Girder 2C, 2D and Col. 3D.JPG taken: 2008/01/30 6:29	posted: 2008/01/30	1523435

	F16EN Spalling and deter w exposed rebar top edges and 10 percent brg loss top Fwd face of Col. 3D.JPG taken: 2008/01/29 1:01	posted: 2008/01/30	1696431
	F16EN Spalling, deter and 15 percent Brg Loss rear top face of Col. 3D.JPG taken: 2008/01/29 1:00	posted: 2008/01/30	1758069

			file_size	
	F16EN-c_8_.JPG taken: 2008/01/2912:58	posted: 2009/01/09	1733130	e:\web\f
	F16EN-b_10_.JPG taken: 2008/01/29 1:11	posted: 2009/01/09	1740664	e:\web\f

	F16EN-a_9_.JPG taken: 2008/01/29 1:30	posted: 2009/01/09	1434949	e:\web\f
	F16EN Spalling and deter and 15 percent brg loss top of Col. 2M Fwd face.JPG taken: 2008/01/2912:55	posted: 2008/01/30	1774026	

	F16EN Abutment 1 Bay 1D Spalling and Delam of the soffit with exposed rebar and heavy efflorescence.JPG taken: 2008/01/29 1:10	posted: 2008/01/30	1502329
	F16EN Trash buildup typical at both abutments full width..JPG taken: 2005/12/21 1:44	posted: 2006/01/09	527620

	F16EN Girders 3C and 3D spalling and corrosion up to R4 in rebar. Note broken stirrups..JPG taken: 2005/12/21 1:40	posted: 2006/01/09	714148	
	Inspector photos_4_.JPG taken: 2004/11/24 1:18	posted: 2009/01/09	94660	e:\web\f

	Inspector photos.JPG taken: 2004/11/24 1:18	posted: 2009/01/09	84970	e:\web\f
	DTD archives_2_.JPG taken: 2004/11/23 7:33	posted: 2009/01/09	23838	e:\web\f

			file_size	
	DTD archives.JPG taken: 2004/11/23 7:33	posted: 2009/01/09	26648	e:\web\f

APPENDIX D

Geotechnical Report

GEOTECHNICAL MEMORANDUM
US 6 BRIDGES, KNOX COURT TO BNSF - FBR 06A-050 (18192)

Preliminary Geotechnical Deep Foundation Design Parameters for US 6 Bridges at I-25, South Platte River and Bryant Street

Prepared For: Hartwig and Associates and Parsons Brinckerhoff
Prepared by: Donald Hunt, RockSol Consulting Group, Inc.
Date: November 16, 2011
RS Project Number: 280.01

The purpose of this memo is to provide preliminary geotechnical foundation design parameters for deep foundations for proposed US 6 bridges at I-25, the South Platte River and Bryant Street. The preliminary foundation design parameters are based on RockSol's review and interpretation of geotechnical information documented on project plans for the existing bridges at I-25, the South Platte River and Bryant Street. In addition, RockSol was provided a copy of a geotechnical report that was prepared by the Colorado Department of Transportation (CDOT) for the replacement of the Colorado Highway 88 (Federal Boulevard) bridge structure (Structure F-16-EK) over US 6. Geotechnical information reviewed primarily consisted of engineering geology sheets and borehole logs, from which the depth to bedrock was interpreted based on material descriptions. In addition, the bearing capacity of the bedrock was evaluated, based on available blow count data obtained during drilling and sampling from the previous explorations. Environmental conditions have not been evaluated by RockSol for this memorandum. Plan sheets and reports reviewed included:

- CDOT Geotechnical Report, *Geotechnical Recommendations for Replacement of Structure F-16-EK*, Project IM 088A-024, SA 16228, dated December 3, 2009
- Bryant Street Bridge, *General Layout, Summary of Quantities and Notes*, Sheet No. 43, Project No. U012-2(3)
- South Platte River Bridge, *General Layout, Summary of Quantities, General Notes, Sheet No. 4,* Project U1002-2(30)
- US 6 Bridge Over I-25, *General Plan and Elevation*, Sheet No. 36, Project No. U012-2(13)
- *Ramp G Engineering Geology*, Sheet No. 85, Project IR 25-2(208)
- *Ramp H Engineering Geology,* Sheet No. 131, Project IR 25-2(191)
- *Ramp F Engineering Geology*, Sheet No. 97, Project IR 25-2(187)

General Site Geology Discussion

Based on the borehole logs presented in the documents reviewed, overburden soils consist of fill materials associated with development of the project area, especially roadway construction for US 6 and I-25, and native soils consisting of clay, sands, and gravel. The native sands are generally characterized as medium dense and the clays generally characterized as medium stiff to stiff. Some boreholes encountered material identified as "trash". Sedimentary bedrock was encountered in most boreholes and primarily consisted of claystone with sandstone also encountered in several borings. Groundwater was encountered within the native soils at elevations ranging from about 5,190 feet in the vicinity of the Bryant Street and South Platte

River Bridges; 5,194 feet to 5,224 feet in the vicinity of the Federal Boulevard Bridge; and about 5,195 feet in the vicinity of the US 6 Bridge over I-25.

Boreholes which encountered bedrock have been plotted on the attached Figure No.1. Included with each borehole location is the approximate elevation that bedrock was encountered. Approximate bedrock elevation contours have been added for preliminary design purposes to illustrate the general trend in the bedrock elevation along US 6 in the vicinity of the project limits. Based on the available bedrock elevations it appears that the highest bedrock elevations occur in the vicinity of the US 6 Bridge over I-25 with elevations in the range of 5,180 feet to 5,187 feet. A gradual drop in bedrock elevation is observed along US 6, west of I-25. At the South Platte River Bridge an approximate bedrock elevation of 5,179 is noted at the east side of the bridge and an approximate bedrock elevation of 5,173 feet to 5,176 feet is noted at the west side of the bridge. The lowest bedrock elevation is noted in the vicinity of the Bryant Street Bridge at approximately 5,170 feet. Bedrock elevations noted at the Federal Boulevard Bridge range from 5,171 feet to 5,173 feet.

Preliminary Foundation Design Parameters

Drilled Shafts

Drilled shafts will provide axial support by embedment into sedimentary bedrock. RockSol evaluated blow count data from boreholes drilled for the Federal Boulevard Bridge, Ramp F, Ramp H, and Ramp G. Blow count data was not provided on the engineering geology sheets for the Bryant Street, South Platte River, and I-25 bridges.

Based on our evaluation, suggested nominal (unfactored) base resistance and nominal (unfactored) side resistance values for the bedrock material are presented in Table 1.1 for use with Load and Resistance Factor Design (LRFD) methods and allowable bearing and side resistance capacities using Allowable Strength Design (ASD) methods.

Table 1.1 - Base and Side Resistance Values for Drilled Shafts

Bearing Material	Nominal Values (LRFD)		Allowable Capacity (ASD)	
	Base Resistance (ksf)	Side Resistance (ksf)	Bearing Resistance (ksf)	Side Resistance (ksf)
Bedrock	135	13.5	45	4.5

Due to the anticipated depth to bedrock at the proposed bridge locations, the side resistance is applicable to the entire portion of the shaft embedded in competent bedrock. Side resistance in the soil zone above competent bedrock should be neglected. For LRFD strength limit state evaluation, a resistance factor of 0.55 is recommended for base/ tip resistance and a resistance factor of 0.60 is recommended for side resistance evaluation for redundant single shafts. Per AASHTO LRFD (Section 10.5.5.2.4), the resistance factors for base/tip and side resistance should be reduced by 20 percent for non-redundant single shafts.

A minimum shaft penetration into competent bedrock of 10 feet is suggested for drilled shafts less than 5 feet in diameter. For drilled shafts 5 feet and greater in diameter, a minimum penetration into competent bedrock of 15 feet is recommended. If needed, the embedment

length may be increased to provide additional resistance to lateral loads and to provide additional axial capacity.

Shaft diameters should be appropriate to resistance structure loads. A minimum shaft diameter of 36 inches is suggested for axial load resistance for structure piers. Smaller diameter shafts may be considered at the abutments. Lateral load resistance requirements may result in larger shaft diameters.

Groundwater will be encountered during construction of drilled shafts embedded into bedrock.

Additional design and construction considerations are listed below.

(a) The construction of drilled shafts should follow the guidelines specified in the "CDOT Standard Specifications for Road and Bridge Construction (SSRBC), Section 503, 2011" and "Drilled Shafts: Construction Procedures and LRFD Design Methods, FHWA-NHI-10-016, May 2010".

(b) During construction of drilled shafts, casing or slurry will be required to support the excavation where groundwater exists and or where holes are unstable due to soil conditions.

(c) Prior to the placement of the concrete, the drilled shaft excavation, including the bottom should be cleaned of all loose material. Due to the presence of water, dewatering of the excavation may be required. For wet conditions (more than two inches of water), concrete placement by "tremie" methods should be used.

(d) Special provisions should be specified for drilling operations and equipment where hard bedrock and or difficult subsurface conditions exist.

(e) Lateral load capacity of the drilled shafts should also be evaluated. As preliminary design efforts progress, RockSol will provide soil parameters appropriate for the conditions encountered in boreholes drilled for this project.

(f) All piers should be reinforced full depth for the applied axial, lateral and uplift stresses imposed. The amount of reinforcing steel for extension should be determined by the tensile force created by the uplift force on each pier, with allowance for dead load.

(g) Drilled shafts should be constructed at least three shaft diameters center to center. For closely spaced drilled shafts, the axial and lateral capacities should be appropriately reduced. Group action of drilled shafts should be analyzed on an individual basis to assess the appropriate reduction.

<u>Driven Piles</u>

Alternatively, driven piles (Grade 50 steel H-pile is assumed) may be considered for the proposed bridges, including the abutments. Evaluation of the effect of pile driving on existing foundations should be considered. RockSol recommends the piles be driven to refusal in the bedrock. Based on anticipated subsurface conditions, practical refusal is estimated to occur within approximately 5 feet of penetration into competent bedrock. Pile driving shall be monitored per CDOT requirements. Monitoring shall be conducted using a Pile Driving Analyzer (PDA) to determine the condition of the pile, the efficiency of the hammer and the static bearing capacity of the pile, and to establish the pile driving criteria. For the LRFD method, a nominal (ultimate) capacity of 37.5 ksi, based on the cross section area of the pile, can be used for Grade 50 steel. A resistance factor of 0.65 is recommended for LRFD strength limit state design for axial compression. Additional design and construction details of the driven piles are presented below:

(a) Steel piling, pile driving equipment, and installation of the driven steel H-piles should follow the guidelines specified in "CDOT Standard Specifications for Road and Bridge Construction (SSRBC), Section 502, 2011 Edition.

(b) Lateral load capacity of the driven piles should also be evaluated. As preliminary design efforts progress, RockSol will provide soil parameters appropriate for the conditions encountered in boreholes drilled for this project. Battered piles may be used to resist the lateral loads. The battered piles inclination should be within one (1) horizontal to four (4) vertical.

(c) RockSol anticipates that approximately 5 feet of pile penetration into bedrock will be required to achieve capacity. The actual length of the piles should be determined during installation.

(d) Center to center pile spacing should not be less than 30 inches or 2.5 pile diameters. For evaluation of horizontal pile foundation movement, the effects of group interaction shall be evaluated in accordance with AASHTO LRFD Bridge Design Specifications, Section 10.7.2.4.

(e) Predrilling may be required for difficult subsurface conditions. Pile tips should be protected against damage using driving shoes for hard sedimentary bedrock.

(f) Potential damage to the property or adjacent structures during pile installation due to noise and vibrations should be evaluated.

RockSol Consulting Group, Inc.

6510W 91st Ave. Ste 130
Westminster, Colorado 80031
Phone: 303.962.9300

Bedrock elevation contours are approximate and presented for preliminary design purposes only. The contours are subject to revision as additional subsurface information is obtained.

-------- 5170' Indicates approximate bedrock elevation contour

Indicates approximate borehole location

BR-5171.5' Indicates Bedrock encountered at approximate depth of 5171.5'

Print Date: $DATE$			
File Name: $FILES$			
Horiz. Scale: $SCALESHORT$	Vert. Scale: As Noted		
Unit Information	Unit Leader Initials		

R-X

Sheet Revisions

Date:	Comments	Init.

Colorado Department of Transportation

DOT DEPARTMENT OF TRANSPORTATION

8833 South Wadsworth Court
Littleton, CO 80128
Phone: 303-972-9112 FAX: 303-972-9114

Region 6 HC

No Revisions:

Revised:

Void:

Approximate Bedrock Elevations Based on Existing Information

Designer:

Detailer:

Sheet Subset:

Structure Numbers

Subset Sheets: of

Project No./Code

Project Number

FBR 06A-050 (18192)

Figure 1

APPENDIX E

Preliminary Cost Estimates

PARSONS BRINCKERHOFF

Project	US 6 Bridges	**Client**	CDOT		
Subject	Quantity Estimate	**Made By**	BZP	**Date**	04/23/12
Item	**Bryant Street Bridge**	**Checked By**	CJS	**Revised**	07/25/12

ITEM NO.	DESCRIPTION	UNIT	QUANTITY	UNIT COST	TOTAL COST
202-00400	REMOVAL OF BRIDGE	EACH	1	$129,950.00	$129,950.00
206-00360	MECHANICAL REINFORCEMENT OF SOIL	CY	1662	$18.00	$29,909.44
206-01781	SHORING (AREA 1)	LS	1	$30,000.00	$30,000.00
206-01782	SHORING (AREA 2)	LS	1	$30,000.00	$30,000.00
403-09221	STONE MATRIX ASPHALT (FIBERS) (ASPHALT)	TON	446	$95.00	$42,383.31
502-00460	PILE TIP	EACH	42	$140.00	$5,880.00
502-02000	DYNAMIC LOAD TESTING	LS	1	$10,000.00	$10,000.00
502-11274	STEEL PILING (HP 12X74)	LF	2457	$70.00	$171,990.00
513-00600	BRIDGE DRAIN	EACH	2	$3,500.00	$7,000.00
515-00120	WATERPROOFING (MEMBRANE)	SY	2729	$14.00	$38,203.59
518-01004	BRIDGE EXPANSION DEVICE (0-4 INCH)	LF	377	$200.00	$75,312.95
601-03040	CONCRETE CLASS D (BRIDGE)	CY	1217.9	$400.00	$487,172.44
601-40300	STRUCTURAL CONCRETE COATING	SY	1204	$10.00	$12,040.00
602-00020	REINFORCING STEEL (EPOXY COATED)	LB	300609	$1.15	$345,700.06
606-10700	BRIDGE RAIL TYPE 7	LF	321	$100.00	$32,100.09
618-00154	PRESTRESSED CONCRETE I (BT54)	LF	1316	$190.00	$250,040.00

TOTAL =	**$1,697,682**
DECK AREA (ft^2) =	17978
COST PER SQUARE FT. =	**$94**

Note: - Quantities do not include Structure Excavation or Backfill. Assumed to be included in Wall Quantities.
Note: - Quantities assume two (2) shoring areas for construction phasing.
Note: - Predrilling of piles may be required, but are not included in the estimate.

PARSONS BRINCKERHOFF

Sheet
Job No.

Project:	US 6 Bridges	**Client:**	CDOT		
Subject:	Quantity Estimate	**By:**	BZP	**Date:**	04/23/12
Item:	**EB Collector Dist. Bridge over Bryant Street**	**Checked By:**	CJS	**Revised:**	07/25/12

ITEM NO.	DESCRIPTION	UNIT	QUANTITY	UNIT COST	TOTAL COST
202-00400	REMOVAL OF BRIDGE	EACH	1	$100,000.00	$100,000.00
206-00360	MECHANICAL REINFORCEMENT OF SOIL	CY	577	$18.00	$10,394.99
206-01781	SHORING (AREA 1)	LS	1	$30,000.00	$30,000.00
206-01782	SHORING (AREA 2)	LS	1	$30,000.00	$30,000.00
403-09221	STONE MATRIX ASPHALT (FIBERS) (ASPHALT)	TON	156	$95.00	$14,816.07
502-00460	PILE TIP	EACH	16	$140.00	$2,240.00
502-02000	DYNAMIC LOAD TESTING	LS	1	$10,000.00	$10,000.00
502-11274	STEEL PILING (HP 12X74)	LF	912	$70.00	$63,840.00
513-00600	BRIDGE DRAIN	EACH	1	$3,500.00	$3,500.00
515-00120	WATERPROOFING (MEMBRANE)	SY	956	$14.00	$13,384.96
518-01004	BRIDGE EXPANSION DEVICE (0-4 INCH)	LF	133	$200.00	$26,606.05
601-03040	CONCRETE CLASS D (BRIDGE)	CY	431.1	$400.00	$172,441.47
601-40300	STRUCTURAL CONCRETE COATING	SY	694	$10.00	$6,940.00
602-00020	REINFORCING STEEL (EPOXY COATED)	LB	106557	$1.15	$122,540.17
606-10700	BRIDGE RAIL TYPE 7	LF	321	$100.00	$32,101.15
618-00154	PRESTRESSED CONCRETE I (BT54)	LF	564	$190.00	$107,165.89

TOTAL =	**$745,971**
DECK AREA (ft^2) =	6351
COST PER SQUARE FT. =	**$117**

Note: - Quantities do not include Structure Excavation or Backfill. Assumed to be included in Wall Quantities.
Note: - Quantities assume two (2) shoring areas for construction phasing.
Note: - Predrilling of piles may be required, but are not included in the estimate.