R.O.W. P.E. & UTILITIES
UNDER IR 25-2(174)

FEDERAL ROAD REGION NO	DIVISION	PROJECT NO	SHEET NO
VIII	COLORADO	IR 25-2 (187)	1

STATE DEPARTMENT OF HIGHWAYS
DIVISION OF HIGHWAYS — STATE OF COLORADO

AS CONSTRUCTED
NO REVISIONS ____ REVISED 7/30/87 VOID ____

	REVISIONS		
R-1	6-5-86	1,12,14,15,48,53,54,55,	J.K.K.
		56,57,59,92,93,142,162	

PLAN AND PROFILE OF ~~PROPOSED~~ AS CONSTRUCTED

FEDERAL AID PROJECT NO. IR 25 -2(187)

STATE HIGHWAY NOS. 6 & 25

DENVER COUNTY

PROJECT NO. IR 25-2(187)

TABULATION OF LENGTH AND DESIGN DATA

STATION	STRUCTURE LIN.FT.	STRUCTURE MILE	ROADWAY LIN.FT.	ROADWAY MILE
RAMP 'F'				
700+00.00 TO 706+84.50			684.50	0.130
706+84.50 TO 710+46.22	361.72	0.069		
STR. NO. F-16-NK				
710+46.22 TO 715+85.61	539.39	0.102		
STR. NO. F-16-OE				
715+85.61 TO 722+84.56			698.95	0.132
722+84.56 TO 724+28.23	143.67	0.027		
STR. NO. F-16-EG				
724+28.23 TO 742+23.43			1795.20	0.340
RAMP 'C'				
400+00.00 TO 411+85.63			1185.63	0.225

SUMMARY	LIN.FT.	MILES
STR. NO. F-16-NK	361.72	0.069
STR. NO. F-16-OE	539.39	0.102
STR. NO. F-16-EG	143.67	0.027
ROADWAY	4364.28	0.827
PROJECT GROSS LENGTH	5409.06	1.025

DESIGN DATA	RAMP 'F'	RAMP 'C'
MAXIMUM DEGREE OF CURVATURE	11°08'30"	24°54'40"
MAXIMUM GRADE	5.20 %	5.075 %
MINIMUM S.S.D. HORIZONTAL	242'	N/A
MINIMUM S.S.D. VERTICAL	386'	295'
MAXIMUM DESIGN SPEED	35 MPH	30 MPH

SCALES OF ORIGINAL DRAWINGS

ON PLAN, 1 IN. = 50 FT. OR AS NOTED
ON PROFILE { 1 IN. = 50 FT. HORIZONTAL
1 IN. = 10 FT. VERTICAL
GRADE LINE ON PROFILE IS SHOWN AS GRADE OF FINISHED ROAD

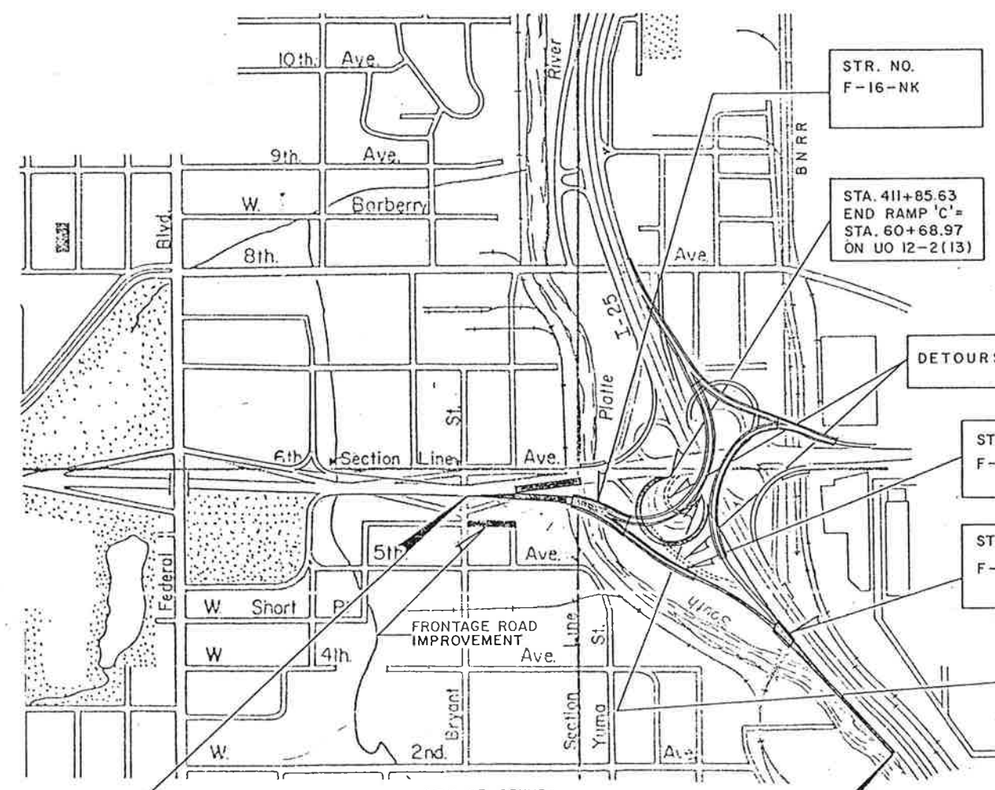

STA. 700+00.00 - BEGIN IR 25-2(187) =
STA. 48+00.00 ON UO12-2(13)

STA. 742+23.43 - END IR 25-2(187) =
STA. 307+08.00 ON I25-2(91)

INDEX OF SHEETS

SHEET NO.	
1.	TITLE SHEET
2.	STANDARD PLANS LIST
3.	I-25/6TH AVE. INTERCHANGE CONTROL POINTS
4.	I-25/6TH AVE. INTERCHANGE CONTROL POINT DIAGRAM
5.	I-25/6TH AVE. IMPROVEMENTS
6.	2000 TRAFFIC DIAGRAM & GENERAL NOTES
7.	RAMP "F" AND RAMP "E" TYPICAL SECTIONS
8.	RAMP "C" AND DETOURS TYPICAL SECTIONS
9. - 15.	SUMMARY OF APPROXIMATE QUANTITIES
16.	SUMMARY OF EARTHWORK, TABULATION OF GUARDRAIL AND TABULATION OF CURBS & GUTTERS & SIDEWALKS
17.	TABULATION OF SURFACING QUANTITIES
18. - 20.	TABULATION OF REMOVAL, ADJUST, AND RESET ITEMS
21.	TABULATION OF STORM SEWER SYSTEM
22. - 25.	CONSTRUCTION STAGING PLAN
26.	GEOMETRIC LAYOUT SHEET
27.	PLAN FOR FRONTAGE ROAD SOUTH OF 6TH AVENUE
28. - 30.	PLAN AND PROFILE--RAMP "F"
31.	PLAN--RAMP "C"
32.	PROFILE--RAMP "C", 6TH AVENUE OVERLAY AND BIKEPATH
33.	PLAN AND PROFILE--DETOURS 1 AND 2
34.	GRADING PLAN 1
35.	GRADING PLAN 2 AND SLOPE PAVING DETAILS
36 - 40.	DRAINAGE AND UTILITY PLANS
41. - 43.	DRAINAGE, BARRIER, AND FENCE DETAILS
44. - 47.	DRAINAGE CROSS SECTIONS
48.	IMPACT ATTENUATORS
49.	ENGINEERING GEOLOGY
50.	LANDSCAPING SUMMARY
51. - 52.	LANDSCAPE PLANS
53.	IRRIGATION SUMMARY
54.	IRRIGATION MAIN GENERAL LAYOUT
55.	IRRIGATION MAIN PLAN AND PROFILE
56. - 57.	IRRIGATION PLANS
58. - 59.	IRRIGATION DETAILS
60. - 71.	LIGHTING PLANS
72. - 91.	SIGNING AND PAVEMENT MARKING PLANS
92. - 141.	STRUCTURE NOS. F-16-NK, F-16-OE
142. - 161.	STRUCTURE NO. F-16-EG
162. - 170.	RETAINING WALLS

NEW & REVISED STANDARDS

M-606-12 GUARD RAIL TYPE 4 CONCRETE BARRIER.

DeLeuw Cather & Company
Denver Co.

PROJECT MANAGER

DIVISION OF HIGHWAYS

APPROVED:

James E. Siebel 5-6-86
Asst CHIEF ENGINEER DATE

DEPARTMENT OF TRANSPORTATION
FEDERAL HIGHWAY ADMINISTRATION

APPROVED: DATE

DIVISION ADMINISTRATOR

AS CONSTRUCTED INFORMATION

CONTRACTOR CENTRIC / JONES CONSTRUCTORS
PROJECT ENGINEER ROBERT L. CLANDER
(Project or Resident)
PROJECT STARTED AUGUST 7, 1986
PROJECT COMPLETED SEPTEMBER 30, 1987
AS CONSTRUCTED PLANS APPROVED S.G. 11/1/91
Const Eng 4-8-88
TITLE DATE

J.K.K. / Dist. VI / P.D.L.

OF COLORADO
DEPARTMENT OF HIGHWAYS
ON OF HIGHWAYS:
H. FORM NO. 126:
EB. 1984

AS CONSTRUCTED			
NO REVISIONS	REVISED 9/30/87	VOID	

FED.ROAD REGION	DIVISION	PROJ. NO.	SHEET NO.	SHEET TOTALS
VIII	COLO.	IR 25-2(187)	50	~~115~~ 122

DESIGN T.C.O.
DATE 1/2/10

LANDSCAPING SUMMARY

L-1

SUMMARY OF PLANT QUANTITIES (Furnish and Install)

	Common Name	Botanical Name	Size	Quantity
Deciduous Trees	WESTERN CATALPA	CATALPA SPECIOSA	2-1/2 IN.	3
	WASHINGTON HAWTHORN	CRATAEGUS PHAENOPYRUM	5 FT.	15
	RUSSIAN OLIVE	ELAEAGNUS ANGUSTIFOLIA	6 FT.	36
	MARSHALL SEEDLESS ASH	FRAXINUS PENNSYLVANICA 'MARSHALL'	2-1/2 IN.	12
	THORNLESS HONEYLOCUST	GLEDITSIA TRIACANTHOS INERMIS	1-1/2 IN.	6
	COTTONLESS COTTONWOOD	POPULUS DELTOIDES	8 FT.	20
Evergreen Trees	ENGELMANN SPRUCE	PICEA ENGELMANNI	6 FT.	7
	AUSTRIAN PINE	PINUS NIGRA	4 FT.	2
	AUSTRIAN PINE	PINUS NIGRA	6 FT.	8
	PONDEROSA PINE	PINUS PONDEROSA	6 FT.	1
	PONDEROSA PINE	PINUS PONDEROSA	8 FT.	2
Deciduous Shrubs	AMUR MAPLE	ACER GINNALA	4 FT.	37
	REDOSIER DOGWOOD	CORNUS STOLONIFERA	3 FT.	53
	BUSH CINQUEFOIL	POTENTILLA FRUTICOSA	18 IN.	29
	CHOKE CHERRY	PRUNUS VIRGINIANA DEMISSA	18 IN.	8
	STAGHORN SUMAC	RHUS TYPHINA	3 FT.	~~11~~ 19
	COYOTE WILLOW	SALIX EXIGUA	3 FT.	16
Evergreen Shrubs	MOUNTAIN COMMON JUNIPER	JUNIPERUS COMMUNIS SAXATILIS	2 FT.	~~40~~ 32
	PFITZER JUNIPER	JUNIPERUS CHINENSIS PFITZERIANA	2 FT.	12
Groundcovers	CROWN VETCH ▲	CORONILLA VARIA	#1	1971
Miscellaneous				

▲ NOTE: NO SUBSTITUTION OF CROWN VETCH PERMITTED. LOCAL "OFF-THE-SHELF" QUANTITIES MAY BE LIMITED. THE CONTRACTOR MAY NEED TO PLACE AN EARLY ORDER WITH A SUPPLIER TO ACQUIRE QUANTITIES REQUIRED FOR THIS PROJECT.

SUMMARY OF LANDSCAPING QUANTITIES

Item No. & Description	Pay Unit-Rate[1]	Quantity	Remarks[1]
212 SEEDING (NATIVE)	ACRE--60 PLS LBS./ACRE	~~5.33~~ 5.49 ACRES	SEE NOTES 1,3 & 4
212 SEEDING (LAWN)	ACRE--60 PLS LBS./ACRE	~~5.40~~ 1.96 ACRES	SEE NOTES 2,3 & 4
212 SOD	SQUARE FOOT	~~134,900~~ 0 SQ.FT.	SEE NOTE 5
213 MULCHING (WOOD CHIP)	CUBIC FOOT	~~15,370~~ 12,490 CU.FT.	FOR PLANTING BEDS
213 MULCHING (HYDRAULIC)	TON--1 TON/ACRE	~~10.75~~ 8.21 TONS	FOR ALL SEEDED AREAS
213 METAL LANDSCAPE BORDER (3/16 x 10 INCH)	LIN.FT.	~~2,075~~ 2,459 LIN.FT.	FOR PLANTING BEDS
213 EROSION BALES	EACH	~~100~~ 0 BALES	
214 PLANTS	EACH	SEE SUMMARY OF PLANT QUANTITIES	
506 PLASTIC FILTER CLOTH	SQUARE YARD	~~4,247~~ 1,055 SQ.YDS	FOR PLANTING BEDS

(FOR INFORMATION ONLY)

SEEDING (NATIVE) - Furnish and Install

Common Name	Botanical Name	PLS.LBS./Acres	Project PLS.LBS. *
FALCON TALL FESCUE	FESTUCA ARUNDINACEA 'FALCON'	25	133.75
REUBEN CANADA BLUEGRASS	POA COMPRESSA 'REUBEN'	10	53.50
LINCOLN SMOOTH BROME	BROMUS INERMIS 'LINCOLN'	25	133.75
TOTAL ACREAGE SEEDED ~~5.05~~ 5.49 ACRES		TOTAL 60	321.00 *

* FOR INFORMATION ONLY

SEEDING (LAWN) - Furnish and Install

Common Name	Botanical Name	PLS.LBS./Acre	Project PLS.LBS *
A-34 BLUEGRASS	POA PRATENSIS 'A-34'	20	108.00
FYLKING BLUEGRASS	POA PRATENSIS 'FYLKING'	20	108.00
GLADE BLUEGRASS	POA PRATENSIS 'GLADE'	10	54.00
MANHATTAN II PERENNIAL RYE	LOLIUM PERENNE 'MANHATTAN II'	10	54.00
TOTAL ACREAGE SEEDED ~~6.40~~ 1.96 ACRES		TOTAL 60	324.00 *

* FOR INFORMATION ONLY

GENERAL NOTES

1. SEEDING (NATIVE) SHALL INCLUDE THE APPLICATION OF FERTILIZER AND NATIVE SEED COMPOSED OF THE SPECIES AND RATES LISTED BELOW. FERTILIZER FOR SEEDING (NATIVE) SHALL BE DIAMMONIUM PHOSPHATE WITH AN AVAILABLE NUTRIENT ANALYSIS OF 18N-46P-0K APPLIED AT A RATE OF 400 LBS./ACRE. THE FERTILIZER SHALL BE TILLED INTO THE TOP 4 INCHES OF SOIL (NOT HYDRO-FERTILIZED) PRIOR TO SEEDING. SEEDING (NATIVE) SHALL BE APPLIED USING HYDRAULIC SEEDING EQUIPMENT IN A SLURRY MIX THAT ENSURES UNIFORM DISTRIBUTION OF THE SEED ON THE SLOPES. A HYDROMULCH CONSISTING OF WOOD CELLULOSE FIBERS AND TACKIFIER (BINDER) SHALL BE APPLIED IMMEDIATELY FOLLOWING HYDROSEEDING.

2. SEEDING (LAWN) SHALL INCLUDE THE APPLICATION OF FERTILIZER AND LAWN SEED COMPOSED OF THE SPECIES AND RATES LISTED BELOW. FERTILIZER FOR SEEDING (LAWN) SHALL BE APPLIED IN TWO PHASES. FIRST, TRIPLE SUPERPHOSPHATE WITH AN AVAILABLE NUTRIENT ANALYSIS OF 0N-46P-0K SHALL BE APPLIED AT A RATE OF 200 LBS./ACRE. THIS FERTILIZER SHALL BE TILLED INTO THE TOP 4 INCHES OF SOIL PRIOR TO SEEDING. SECONDLY, A STANDARD COMMERCIAL FERTILIZER WITH AN AVAILABLE NUTRIENT ANALYSIS OF 20N-10P-5K SHALL BE APPLIED AT A RATE OF 200 LBS./ACRE. THIS FERTILIZER SHALL BE BROADCAST (NOT HYDROFERTILIZED) AFTER GERMINATION AT THE DIRECTION OF THE ENGINEER. SEEDING (LAWN) SHALL BE APPLIED USING HYDRAULIC SEEDING EQUIPMENT IN A SLURRY MIX THAT ENSURES UNIFORM DISTRIBUTION OF THE SEED ON THE SLOPES. A HYDROMULCH CONSISTING OF WOOD CELLULOSE FIBERS AND TACKIFIER (BINDER) SHALL BE APPLIED IMMEDIATELY FOLLOWING HYDROSEEDING.

3. MULCHING (HYDRAULIC) SHALL INCLUDE THE APPLICATION OF WOOD CELLULOSE FIBERS AND TACKIFIER (NOT PAID FOR SEPARATELY) OVER ALL SEEDING (NATIVE) AND (LAWN) AREAS. RATE OF HYDRAULIC WOOD CELLULOSE MULCH SHALL BE 1 TON/ACRE AND TACKIFIER (BINDER) RATE SHALL BE 100 LBS/ACRE.

4. HYDRAULIC SEEDING AND MULCHING EQUIPMENT SHALL BE SIZED TO CONFORM TO THE QUANTITY AND SIZE OF SEED OR MULCH APPLIED SO AS TO MAXIMIZE EQUIPMENT PERFORMANCE, MINIMIZE WASTE OF MATERIALS, CONTROL SPRAY, AND MEET COVERAGE SPECIFICATIONS.

5. SOD SHALL INCLUDE THE APPLICATIONS OF FERTILIZERS DESCRIBED FOR SEEDING (LAWN) AND THE INSTALLATION OF BLUEGRASS SOD AS SHOWN ON THE PLANS.

6. ALL SHRUBS AND TREES SHALL RECEIVE FERTILIZER TABLETS AS DESCRIBED IN THE 214 SPECIAL PROVISION. APPROXIMATELY 1075 TABLETS WILL BE REQUIRED FOR THIS PROJECT. THESE WILL NOT BE PAID FOR SEPARATELY, BUT SHALL BE INCLUDED IN THE PRICE OF THE PLANTS.

7. WATER USED FOR HYDRAULIC SEEDING AND MULCHING, AND FOR PLANTINGS AND SOD WILL NOT BE PAID FOR SEPARATELY, BUT SHALL BE INCLUDED IN THE WORK. ALL PLANTINGS (GRASS, SHRUBS, TREES, ETC.) IN IRRIGATED AREAS SHALL BE PLANTED IN COORDINATION WITH THE IRRIGATION SYSTEM SO IRRIGATION CAN BEGIN IMMEDIATELY FOLLOWING PLANTING.

8. NO TREES, OUTSIDE OF PLANTING BEDS SHALL BE PLANTED CLOSER THAN 15 FEET TO A FENCE OR WITHIN 30 FEET FROM THE EDGE OF TRAVEL LANE.

9. THE HEALTH AND MAINTENANCE (WATERING) OF ALL EXISTING TREES AND SHRUBS DESIGNATED TO REMAIN (SEE GRADING AND PLANTING PLANS) SHALL BE THE RESPONSIBILITY OF THE CONTRACTOR DURING THE CONSTRUCTION PERIOD. LOSS OF TREES OR SHRUBS BECAUSE OF NEGLECT WILL RESULT IN REPLACEMENT IN KIND AND SIZE BY THE CONTRACTOR AT THEIR OWN EXPENSE.

OF COLORADO
DEPARTMENT OF HIGHWAYS
ON OF HIGHWAYS:
4, FORM NO. 126:
EB. 1984

AS CONSTRUCTED				
NO REVISIONS		REVISED 9/30/87	VOID	

FED. ROAD REGION	DIVISION	PROJ. NO.	SHEET NO.	SHEET TOTALS
VIII	COLO.	IR 25-2(187)	51	~~170~~ 177

DESIGN TYCO
DATE 1/86

LANDSCAPE PLAN

L-2

50 0 50 100
scale feet
ORIGINAL SCALE

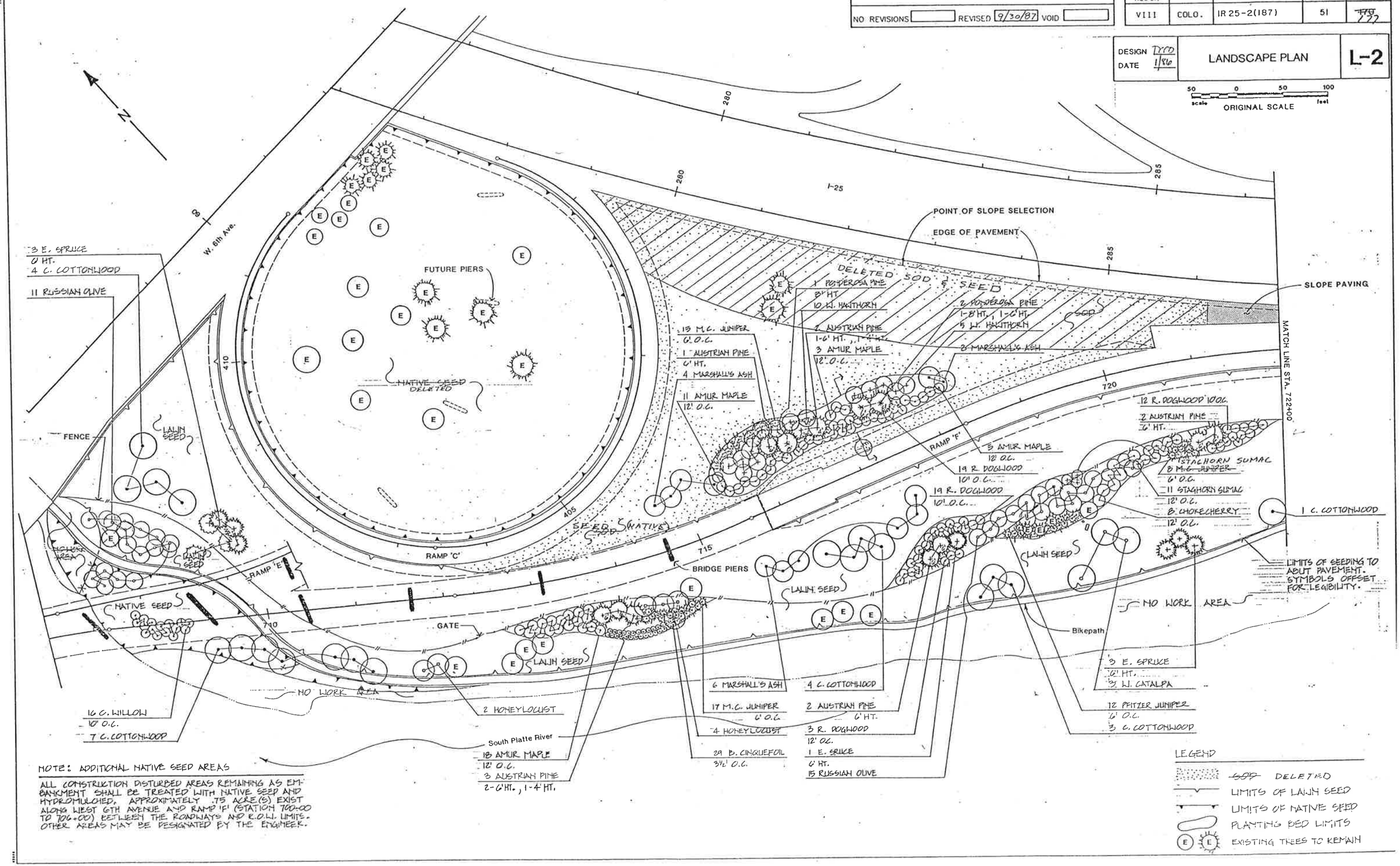

NOTE: ADDITIONAL NATIVE SEED AREAS

ALL CONSTRUCTION DISTURBED AREAS REMAINING AS EMBANKMENT SHALL BE TREATED WITH NATIVE SEED AND HYDROMULCHED. APPROXIMATELY .75 ACRE(S) EXIST ALONG WEST 6TH AVENUE AND RAMP 'F' (STATION 700+00 TO 706+00) BETWEEN THE ROADWAYS AND R.O.W. LIMITS. OTHER AREAS MAY BE DESIGNATED BY THE ENGINEER.

LEGEND

- ~~SOD~~ DELETED
- LIMITS OF LAWN SEED
- LIMITS OF NATIVE SEED
- PLANTING BED LIMITS
- EXISTING TREES TO REMAIN

COLORADO
DEPARTMENT OF HIGHWAYS
FORM NO. 126
B. 1984

AS CONSTRUCTED			
NO REVISIONS	REVISED 7/30/87	VOID	

FED.ROAD REGION	DIVISION	PROJ. NO.	SHEET NO.	SHEET TOTALS
VIII	COLO.	IR 25-2(187)	52	~~155~~ 177

DESIGN
DATE

LANDSCAPE PLAN AND DETAIL

L-3

50 0 50 100
scale feet
ORIGINAL SCALE

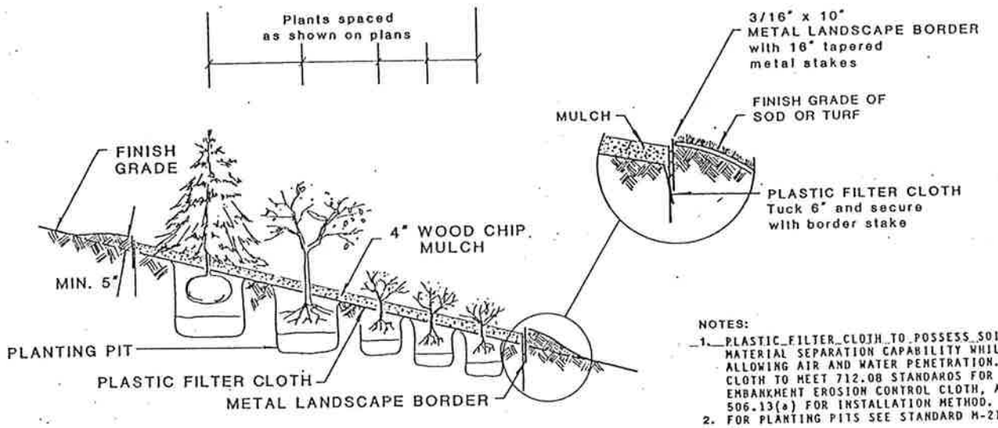

NOTES:
1. PLASTIC FILTER CLOTH TO POSSESS SOIL MATERIAL SEPARATION CAPABILITY WHILE ALLOWING AIR AND WATER PENETRATION. CLOTH TO MEET 712.08 STANDARDS FOR EMBANKMENT EROSION CONTROL CLOTH, AND 506.13(a) FOR INSTALLATION METHOD.
2. FOR PLANTING PITS SEE STANDARD M-214-1.

1 / L-3 PLANTING BED DETAIL
CROSS SECTION VIEW NO SCALE

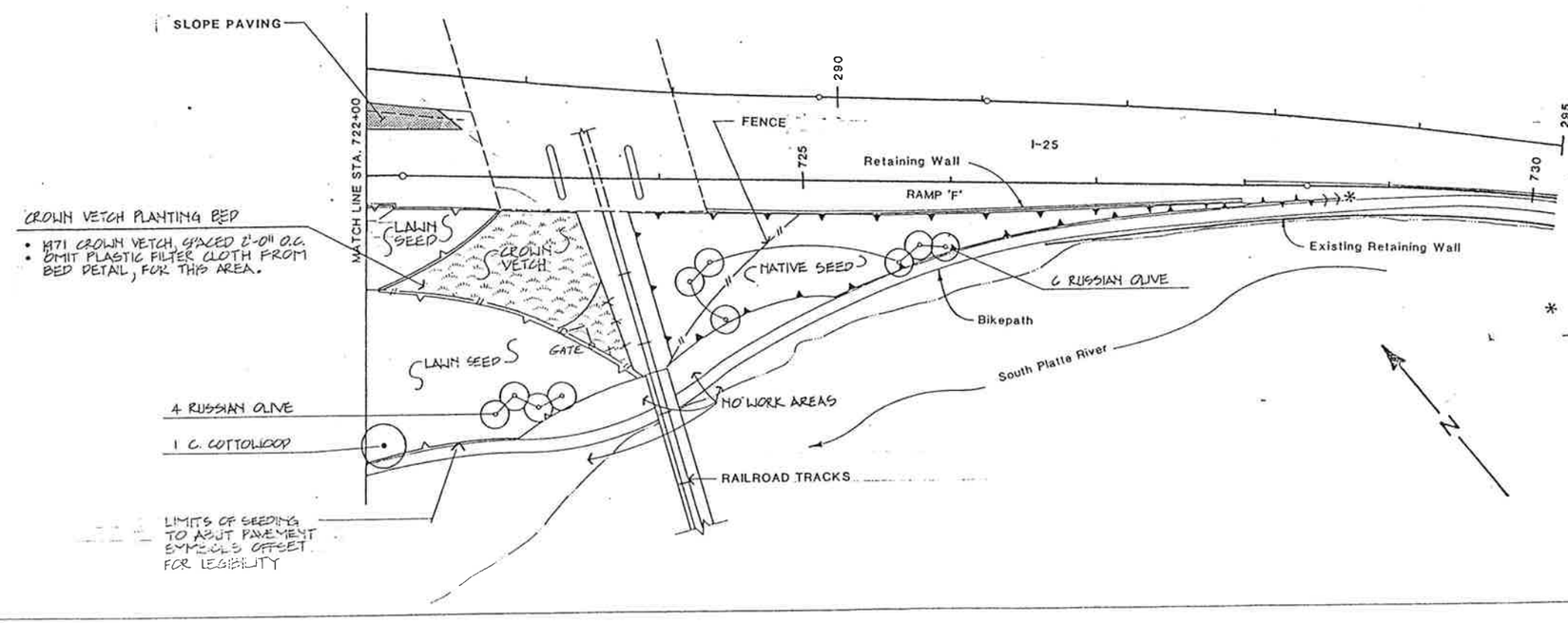

* NOTE: ADDITIONAL NATIVE SEED AREAS

ALL CONSTRUCTION DISTURBED AREAS REMAINING AS EMBANKMENT SHALL BE TREATED WITH NATIVE SEED AND HYDRO-MULCHED. THIS INCLUDES THE SLOPE BETWEEN THE BIKEPATH AND WIDENED I-25 SHOULDER FROM STATION 728+00 to 742+23. OTHER AREAS MAY BE DESIGNATED BY THE ENGINEER.

COLORADO
DEPARTMENT OF HIGHWAYS
DIVISION OF HIGHWAYS:
FORM NO. 126
1. 1984

REVISIONS		
R-1 6-5-86	Rev. Controllers, Quantities, Note	J.K.K.

AS CONSTRUCTED
NO REVISIONS ____ REVISED 9/30/87 VOID ____

FED. ROAD REGION	DIVISION	PROJ. NO.	SHEET NO.	SHEET TOTALS
VIII	COLO.	IR 25-2 (187)	53	~~170~~ 177

DESIGN D.S.
DATE 12/85

IRRIGATION SUMMARY

I-1

SUMMARY OF IRRIGATION QUANTITIES (Furnish and Install)

SPRINKLERS

Symbol	Item No.	Description	Unit	Riser	Pattern	GPM	PRESSURE LBS	SPACING FEET	RADIUS FEET	SHEET QUANTITIES I-3	I-4	I-5	PLAN QUANTITY	CONSTRUCTED FINAL QUANTITY	LEGEND
○	623	1 Inch Pop-up Rotary Sprinkler	Each	Plastic	360°	13.5	50	55	55		49		49		Toro 644-02-42
◔	623	1 Inch Pop-up Rotary Sprinkler	Each	Plastic	270°	13.5	50	55	55		5		5		Toro 643-02-42
◒	623	1 Inch Pop-up Rotary Sprinkler	Each	Plastic	180°	13.5	50	55	55		72	3	75		Toro 642-02-42
◕ 90	623	1 Inch Pop-up Rotary Sprinkler	Each	Plastic	90°	6.7	50	50	50		3		3	170	Toro 641-02-40
◔ 45	623	1 Inch Pop-up Rotary Sprinkler	Each	Plastic	45°	6.7	50	50	50		3		3		Toro 640-02-40
□	623	1 Inch Pop-up Rotary Sprinkler	Each	Galv. Steel	360°	11.4	50	50	50		7	3	10		~~Buckner 17080-15~~ TORO 644-02-42
▭	623	1 Inch Pop-up Rotary Sprinkler	Each	Galv. Steel	180°	11.4	50	50	50		46	7	53		~~Buckner 17081-15~~ TORO 642-02-42
◪ 90	623	1 Inch Pop-up Rotary Sprinkler	Each	Galv. Steel	90°	7.1	50	46	46			1	1		~~Buckner 17081-12~~ TORO 614-02-40
△	623	Shrubbery Spray and Flood Irrigator	Each	Plastic	360°	4.8	50	30	30		34	2	36	36	Toro XP-300S-F-5.0
▲	623	Shrubbery Spray and Flood Irrigator	Each	Plastic	180°	2.4	50	30	30			7	7		Toro XP-300S-H-5.0

MISCELLANEOUS ITEMS

	Item No.	Description	Unit		I-3	I-4	I-5	PLAN QUANTITY	CONSTRUCTED FINAL QUANTITY
	604	Meter Vault	Each		2			2	2
	619	6 Inch Cast Iron Pipe	Lin. Ft.		90			90	78
R-1	619	18 Inch Welded Steel Pipe (Jacked)	Lin. Ft.		660			660	598
	619	1 Inch Plastic Pipe (PE)	Lin. Ft.			4320	490	4810	4215
	619	1 1/2 Inch Plastic Pipe (PE)	Lin. Ft.			3185	205	3390	2515
	619	2 Inch Plastic Pipe (PE)	Lin. Ft.			1695	130	1825	1760
	619	2 Inch Plastic Pipe (PVC)	Lin. Ft.			140		140	
	619	3 Inch Plastic Pipe (PVC)	Lin. Ft.			4390	240	4630	3006
	619	4 Inch Plastic Pipe (PVC)	Lin. Ft.			155		155	155
	619	6 Inch Plastic Pipe (PVC)	Lin. Ft.		305	535		840	914
	619	8 Inch Plastic Pipe (PVC)	Lin. Ft.		1180	70		1250	1281
	619	20 INCH WELDED STEEL PIPE (JACKED)	LIN. FT.						330
	623	6 Inch Backflow Preventer	Each	FEBCO 825	1			1	1
X D.V.	623	1 Inch Drain Valve	Each	MATCO (AMERICAN) M-50 200 RS 51-052		6	2	8	10
I	623	2 Inch Automatic Control Valve	Each	BUCKNER 20040		35	4	39	39
	623	Control Wire 24 Volt	Lin. Ft.			13170	560	13730	17,803
Q.C.	623	1 Inch Quick-Coupler Valve	Each	TORO 474-00		8		8	10
⦶	623	3 Inch Gate Valve	Each	AMERICAN 51-084-1 27MA		8		8	6
⦶	623	6 Inch Gate Valve	Each	AMERICAN 51-086 27MA/51-183 27A	8	3		11	12
⦶	623	8 Inch Gate Valve	Each	AMERICAN 51-087 27MA	3			3	3
	623	6 Inch Water Meter	Each	ROCKWELL W-2000 DR	1			1	1
E [6]	623	6 Station Automatic Controller	Each	TORO IC 6x6 126-06-01		1		1	1
R-1 F [8]	623	8 Station Automatic Controller	Each	TORO IC 8x8 128-06-01		1		1	1
R-1									
B,C,D [12]	623	12 Station Automatic Controller	Each	TORO IC 12x12 132-06-01		3		3	3
R-1									

GENERAL NOTES

1. THE CONTRACTOR WILL NOT INTERRUPT SPRINKLER SYSTEM SERVICE BETWEEN APRIL AND OCTOBER. THE NEW 6" WATER LINE SHALL BE CONSTRUCTED IN THE AREA OF RAMPS 'E' AND 'H' BEFORE CONSTRUCTION OF THOSE RAMPS IS BEGUN BY OTHERS. CONNECTIONS TO EXISTING LINES WILL BE DONE AFTER OCTOBER.
2. THE CONTRACTOR WILL BE RESPONSIBLE FOR THE IMMEDIATE REPAIR AND MAINTENANCE OF BROKEN OR DAMAGED LINES THAT IRRIGATE THE NE, NW AND SE QUADRANTS. THIS WORK AND WORK ASSOCIATED WITH CONNECTING THE NEW MAIN TO EXISTING LINES WILL BE PAID FOR UNDER THE FORCE ACCOUNT ITEM "REPAIR AND MAINTENANCE OF EXISTING IRRIGATION SYSTEM".
3. THE NEW 6" WATER TAP FEE AND ASSOCIATED CONSTRUCTION WILL BE PAID FOR UNDER THE FORCE ACCOUNT ITEM "RELOCATE WATER TAP".
4. THE EXISTING 30" WATER MAIN SHALL BE ABANDONED AND METER VAULT SHALL BE REMOVED AFTER COMPLETION OF NEW IRRIGATION SYSTEM.
5. THE NEW WATER TAP, METER, VAULT, VALVES, MANHOLES, THRUST BLOCKS, ETC., SHALL CONFORM TO THE LATEST REVISION OF THE "DENVER WATER DEPARTMENT ENGINEERING STANDARDS".
6. ALL PIPE SIZES SHOWN ON THE PLANS SHALL BE AS FOLLOWS: 1", 1½" AND 2" LATERALS SHALL BE POLYETHYLENE; 3", 4", 6" AND 8" SHALL BE POLYVINYL CHLORIDE PRESSURE CLASS 200, EXCEPT WHERE SHOWN ON THE PLANS.
7. SPRINKLER SYSTEM INSTALLATION SHALL BE COORDINATED WITH ALL OTHER UTILITY, LIGHTING AND PLANTING INSTALLATION. IRRIGATION LINES SHALL NOT BE INSTALLED WITHIN 10' OF PIER FACES, LIGHT STANDARDS, TREES, ETC. SPRINKLERS SHALL BE PLACED 4 FEET FROM EDGE OF SHOULDER OR PIER FACE WHERE SHOWN ON THE PLANS AND A MINIMUM OF 10 FEET FROM TREES OR LIGHT STANDARDS.
   R-1
8. AUTOMATIC CONTROLLERS B,C, AND D SHALL BE "RAIN MASTER RMIZE-OD SERIES" AS MADE BY RAIN MASTER IRRIGATION SYSTEMS, OR APPROVED EQUAL.
   R-1

STATE OF COLORADO
DEPARTMENT OF HIGHWAYS
DIVISION OF HIGHWAYS
H. H. FORM NO. 1261
FEB. 1964

AS CONSTRUCTED		
NO REVISIONS	REVISED 9/30/87	VOID

FED. ROAD REGION	DIVISION	PROJ. NO.	SHEET NO.	SH TOT
VIII	COLO.	IR 25-2(187)	54	72

DESIGN D.S.
DATE 12/85

IRRIGATION MAIN
GENERAL LAYOUT

I-

REVISIONS		
R-1	6-5-86	Rev. Pipe Dia., Added Note

SEE SHEETS 55 THRU 59 FOR DETAILS.
LOCATION OF WATER LINE IS NOT AT TRUE LOCATION AS SHOWN ON THIS DRAWING. CONCEPT IS CORR

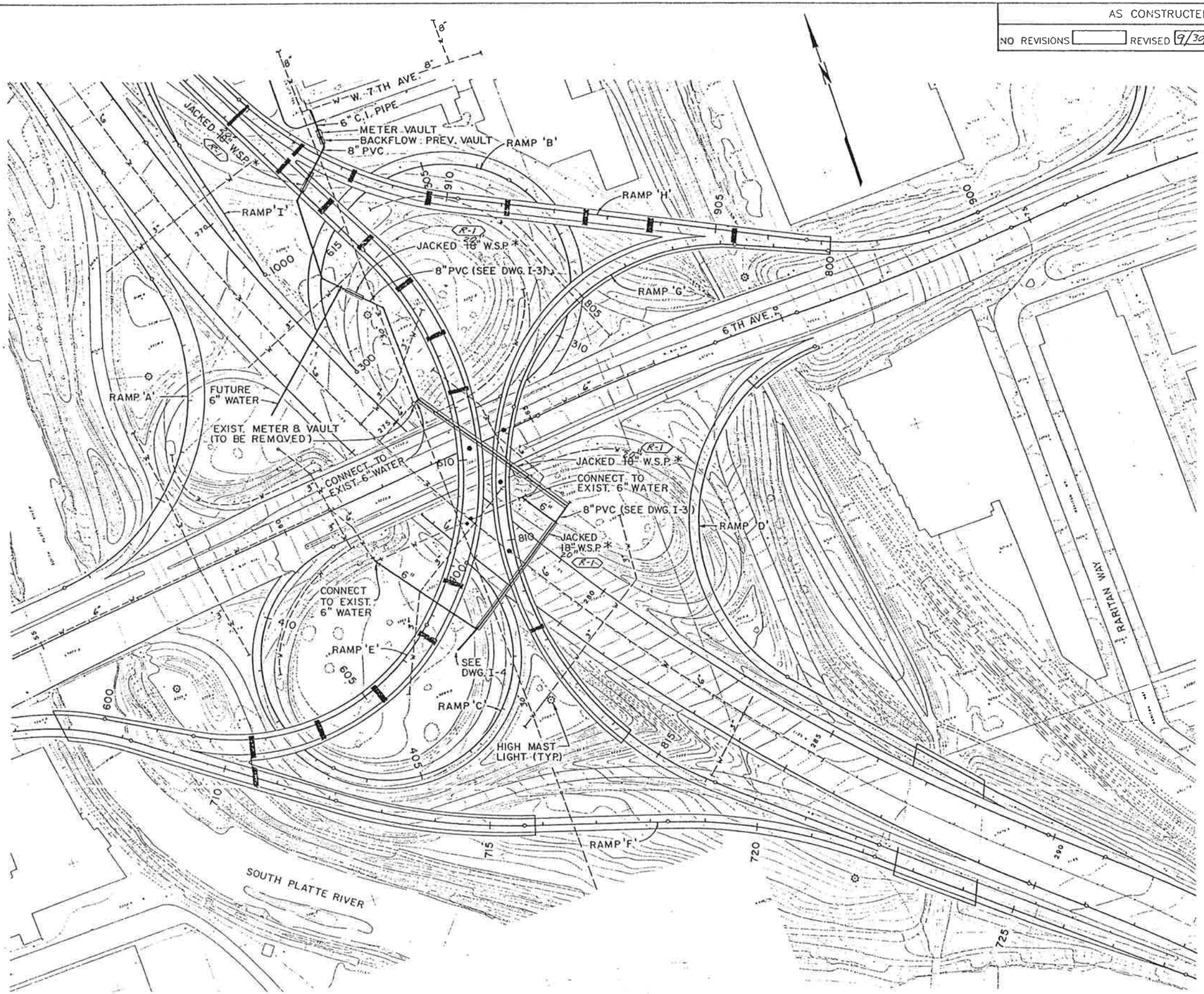

1"=100'
100 0 100 200
scale feet
ORIGINAL SCALE

ABBREVIATIONS

W.S.P. - WELDED STEEL PIPE
C.I. - CAST IRON
P.V.C. - POLYVINYL CHLORIDE
P.E. - POLYETHYLENE

R-1 * - SEE DETAIL ON DWG. I-5

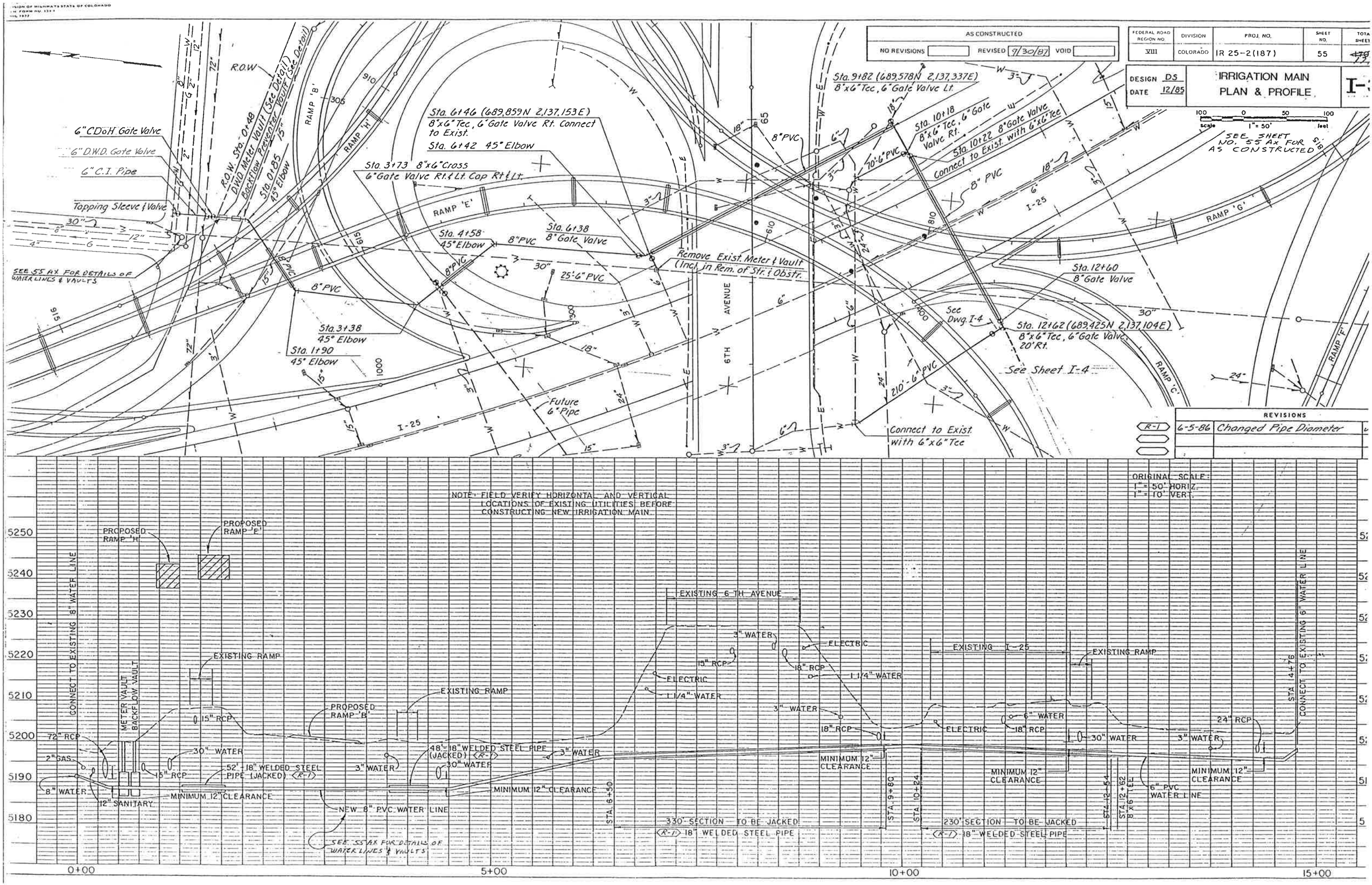

AS CONSTRUCTED
NO REVISIONS
REVISED 9/30/87
VOID
FEDERAL ROAD REGION NO. VIII
DIVISION COLORADO
PROJ. NO. IR 25-2(187)
SHEET NO. 55
DESIGN DS
DATE 12/85
IRRIGATION MAIN PLAN & PROFILE
I-
SEE SHEET NO. 55 AX FOR AS CONSTRUCTED
R.O.W.
6" CDoH Gate Valve
6" D.W.D. Gate Valve
6" C.I. Pipe
Tapping Sleeve & Valve
R.O.W. Sta. 0+48 D.W.D. Meter Vault (See Detail) Backflow Preventer Vault (See Detail)
Sta. 0+85 45° Elbow
RAMP 'B'
RAMP 'H'
RAMP 'E'
RAMP 'G'
RAMP 'C'
RAMP 'F'
Sta. 6+46 (689,859N 2,137,153E) 8"x6" Tee, 6" Gate Valve Rt. Connect to Exist.
Sta. 6+42 45° Elbow
Sta. 3+73 8"x6" Cross 6" Gate Valve Rt. & Lt. Cap Rt. & Lt.
Sta. 4+58 45° Elbow
Sta. 6+38 8" Gate Valve
Sta. 3+38 45° Elbow
Sta. 1+90 45° Elbow
Sta. 9+82 (689,578N 2,137,337E) 8"x6" Tee, 6" Gate Valve Lt.
Sta. 10+18 8"x6" Tee, 6" Gate Valve Rt.
Sta. 10+22 8" Gate Valve Connect to Exist. with 6"x6" Tee
Sta. 12+60 8" Gate Valve
Sta. 12+62 (689,425N 2,137,104E) 8"x6" Tee, 6" Gate Valve 20' Rt.
Remove Exist. Meter & Vault (Incl. in Rem. of Str. & Obstr.
Future 6" Pipe
Connect to Exist. with 6"x6" Tee
See Dwg. I-4
See Sheet I-4
6TH AVENUE
I-25
SEE 55 AX FOR DETAILS OF WATER LINES & VAULTS
REVISIONS
R-1 6-5-86 Changed Pipe Diameter
ORIGINAL SCALE: 1" = 50' HORIZ. 1" = 10' VERT.
NOTE: FIELD VERIFY HORIZONTAL AND VERTICAL LOCATIONS OF EXISTING UTILITIES BEFORE CONSTRUCTING NEW IRRIGATION MAIN.
PROPOSED RAMP 'H'
PROPOSED RAMP 'E'
EXISTING RAMP
PROPOSED RAMP 'B'
EXISTING 6TH AVENUE
EXISTING I-25
CONNECT TO EXISTING 8" WATER LINE
CONNECT TO EXISTING 6" WATER LINE
METER VAULT
BACKFLOW VAULT
72" RCP
2" GAS
8" WATER
12" SANITARY
15" RCP
30" WATER
52'-18" WELDED STEEL PIPE (JACKED) (R-1)
MINIMUM 12" CLEARANCE
NEW 8" PVC WATER LINE
SEE 55 AX FOR DETAILS OF WATER LINES & VAULTS
48'-18" WELDED STEEL PIPE (JACKED) (R-1)
3" WATER
ELECTRIC
1 1/4" WATER
18" RCP
6" WATER
24" RCP
6" PVC WATER LINE
STA. 6+50
STA. 9+80
STA. 10+24
STA. 12+54
STA. 12+62 8"x6" TEE
STA. 14+76
330' SECTION TO BE JACKED (R-1) 18" WELDED STEEL PIPE
230' SECTION TO BE JACKED (R-1) 18" WELDED STEEL PIPE
5250
5240
5230
5220
5210
5200
5190
5180
0+00
5+00
10+00
15+00

AS CONSTRUCTED		
NO REVISIONS	REVISED 1/30/87	VOID

FEDERAL ROAD REGION NO.	DIVISION	PROJ. NO	SHEET NO.	TOTAL SHEETS
VIII	COLORADO	IR 25-2(187)	55A	177

DESIGN DS
DATE 12/85

IRRIGATION MAIN PLAN & PROFILE

I-3

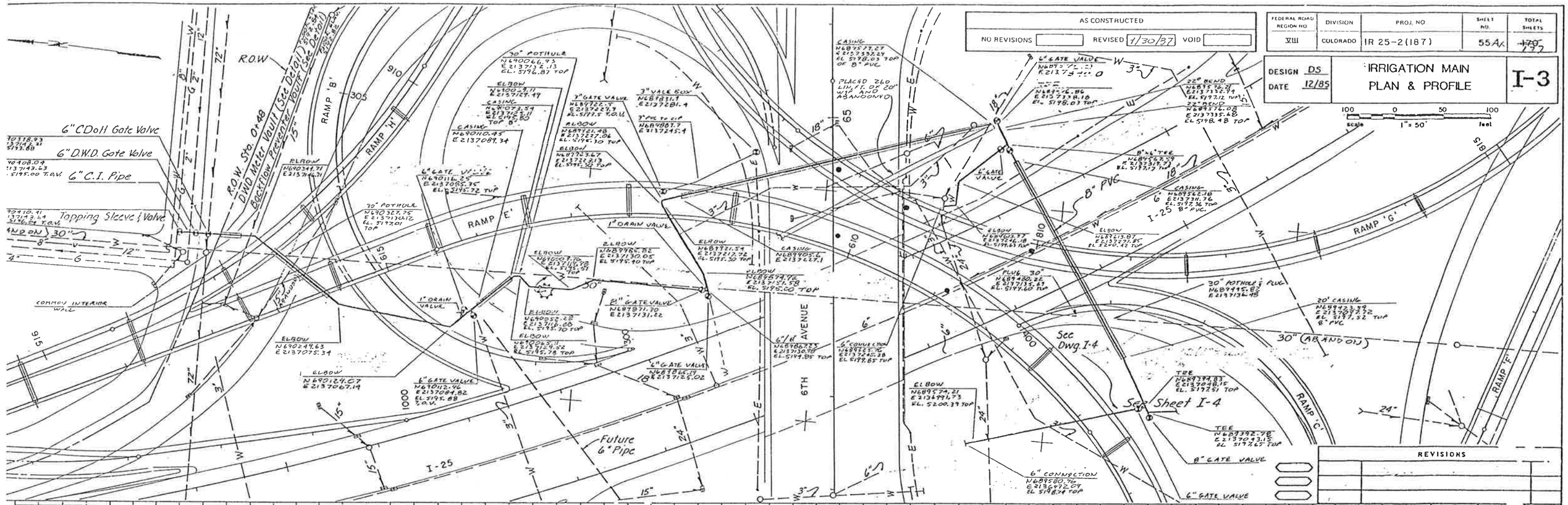

REVISIONS		

ORIGINAL SCALE:
1" = 50' HORIZ.
1" = 10' VERT.

NOTE: FIELD VERIFY HORIZONTAL AND VERTICAL LOCATIONS OF EXISTING UTILITIES BEFORE CONSTRUCTING NEW IRRIGATION MAIN.

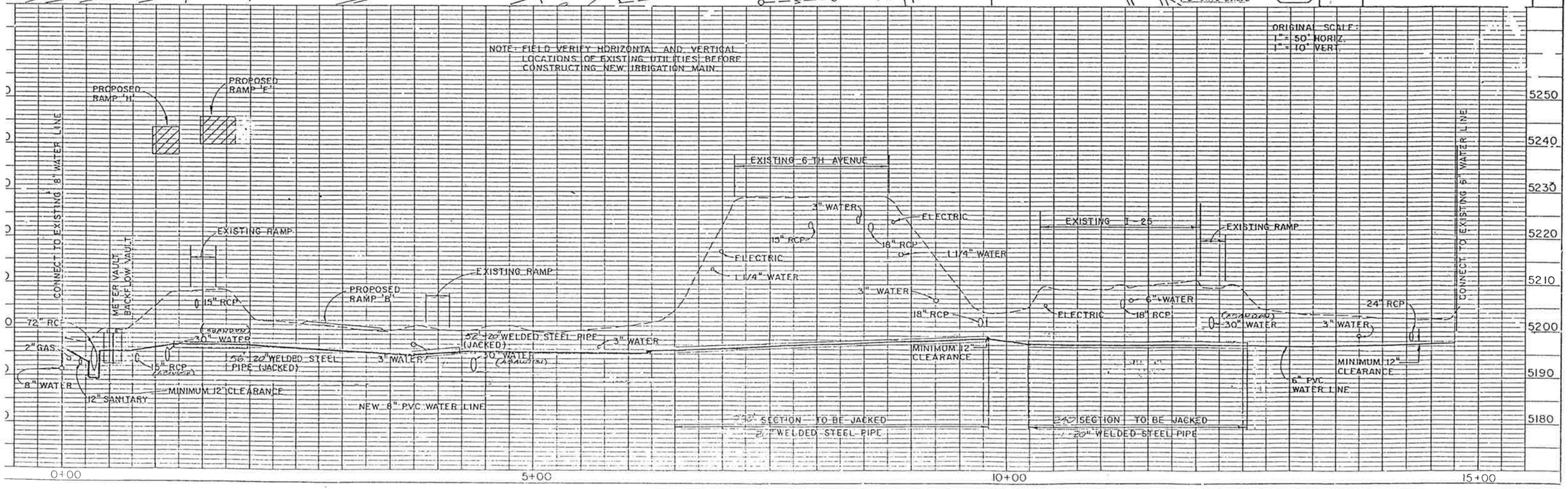

COLORADO
PARTMENT OF HIGHWAYS
OF HIGHWAYS
FORM NO. 126
3. 1984

AS CONSTRUCTED					
NO REVISIONS	REVISED 9/30/87	VOID			

FED.ROAD REGION	DIVISION	PROJ. NO.	SHEET NO.	SHEET TOTALS
VIII	COLO.	IR 25-2(187)	56	755

REVISIONS			
R-1	6-5-86	Changed Controllers Note	J.K.K.

DESIGN D.S.
DATE 12/85

IRRIGATION PLAN

I-4

1" = 50' (scale: 50 0 50 100 feet)

ORIGINAL SCALE
SEE SHEET NO. 56 AX FOR AS CONSTRUCTED

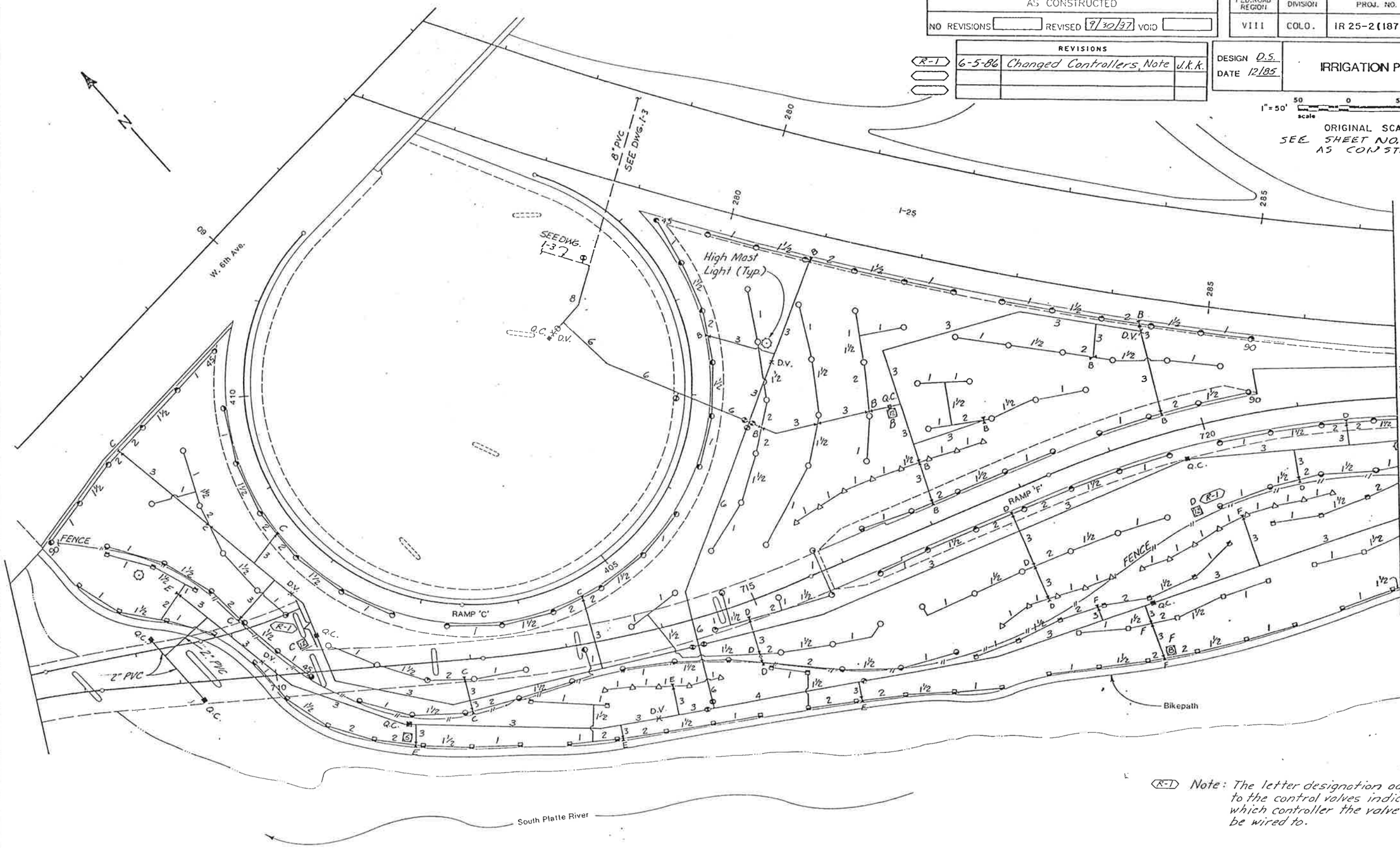

R-1 Note: The letter designation adjacent to the control valves indicates which controller the valve should be wired to.

8900
ENT OF HIGHWAYS
IGHWAYS:
NO. 126:
84

AS CONSTRUCTED			
NO REVISIONS		REVISED 9/30/87	VOID

FED.ROAD REGION	DIVISION	PROJ. NO.	SHEET NO.	SHEET TOTALS
VIII	COLO.	IR 25-2(187).	56A×	~~170~~ 177

REVISIONS			
R-1	6-5-86	Changed Controllers, Note	J.K.K.

DESIGN D.S.
DATE 12/85

IRRIGATION PLAN

I-4

1" = 50' scale — 50 0 50 100 feet

ORIGINAL SCALE

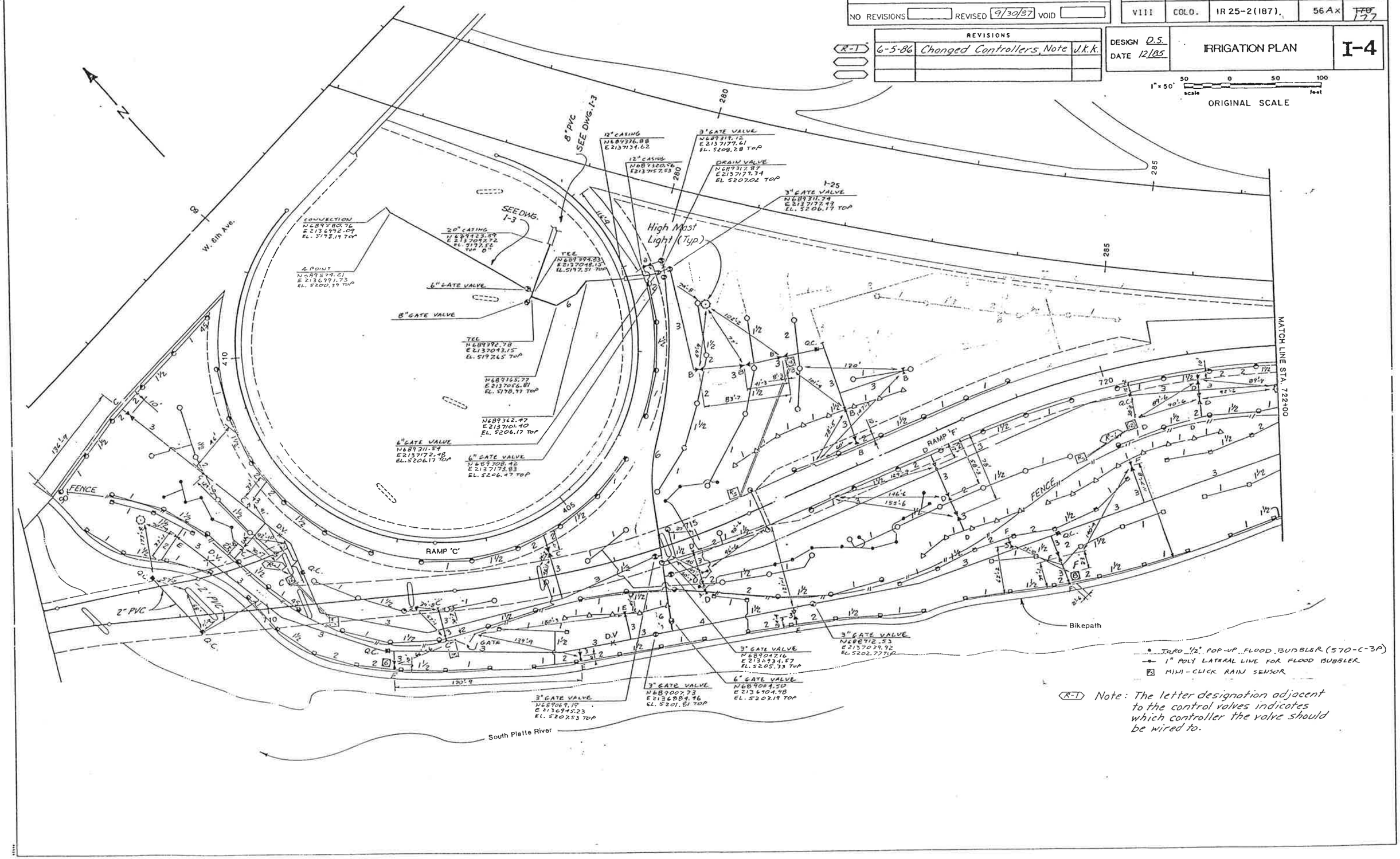

(R-1) Note: The letter designation adjacent to the control valves indicates which controller the valve should be wired to.

: COLORADO
EPARTMENT OF HIGHWAYS
N OF HIGHWAYS:
. FORM NO. 126:
8. 1984

AS CONSTRUCTED			
NO REVISIONS	REVISED 9/30/87	VOID	

FED.ROAD REGION	DIVISION	PROJ. NO.	SHEET NO.	SHEET TOTALS
VIII	COLO.	IR 25-2(187)	57	~~176~~ 177

REVISIONS			
R-1	6-5-86	Added Detail	J.K.K.

DESIGN D.S.
DATE 12/85

IRRIGATION PLAN

I-5

1" = 50' scale (50 0 50 100 feet)

ORIGINAL SCALE

SEE SHEET NO. 57 Ax FOR AS CONSTRUCTED

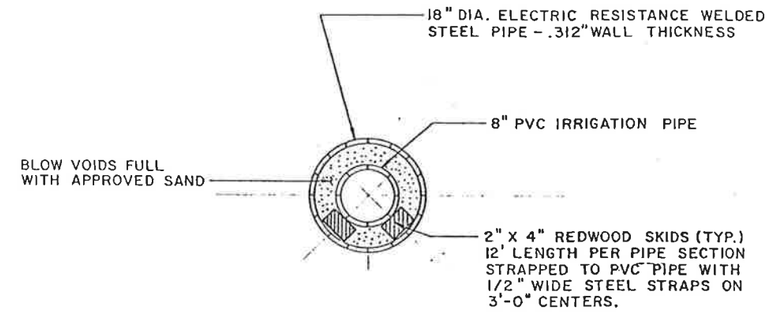

JACKING DETAIL WELDED STEEL PIPE (R-1)

ALL MATERIALS SUBSIDIARY TO 18" WELDED STEEL PIPE

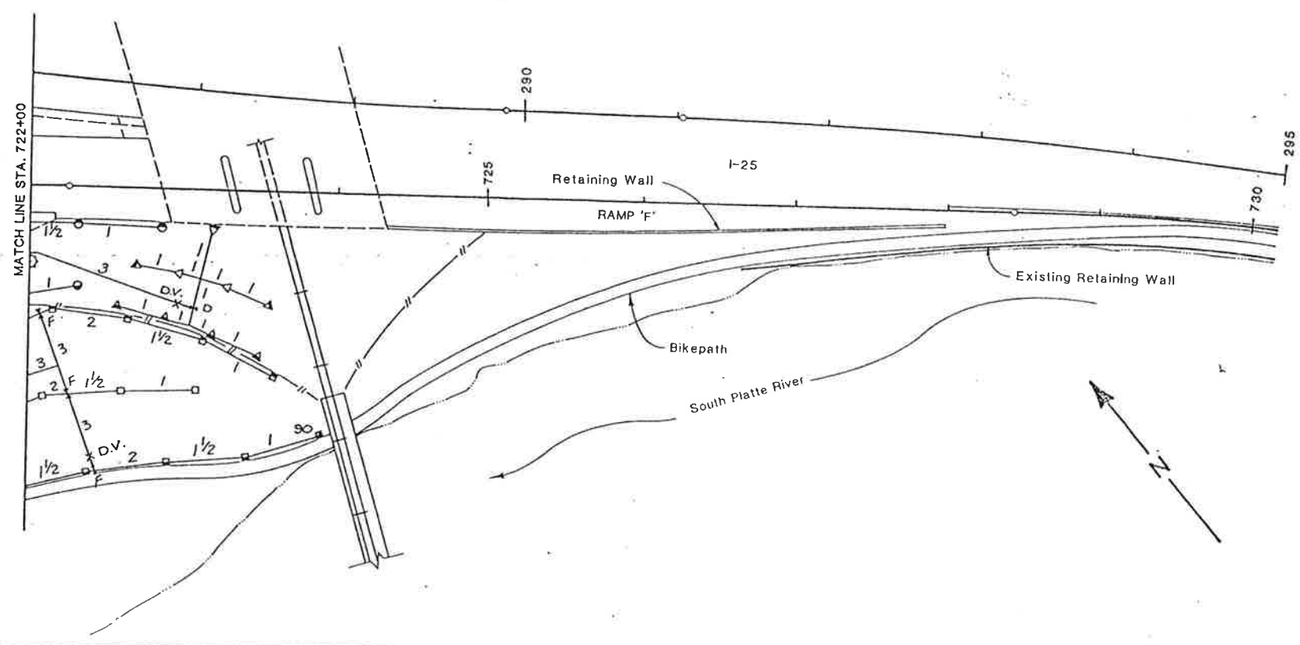

OF COLORADO
DEPARTMENT OF HIGHWAYS
ION OF HIGHWAYS:
H. FORM NO. 126:
FEB. 1984

AS CONSTRUCTED					
NO REVISIONS		REVISED 9/30/87	VOID		

FED. ROAD REGION	DIVISION	PROJ. NO.	SHEET NO.	SHEET TOTALS
VIII	COLO.	IR 25-2(187)	57Ax	~~170~~ 177

REVISIONS			
R-1	6-5-86	Added Detail	J.K.K.

DESIGN D.S.
DATE 12/85

IRRIGATION PLAN

I-5

1" = 50' 50 0 50 100 scale feet

ORIGINAL SCALE

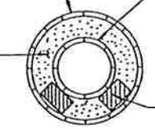

JACKING DETAIL WELDED STEEL PIPE (R-1)

ALL MATERIALS SUBSIDIARY TO ~~18"~~ 20" WELDED STEEL PIPE

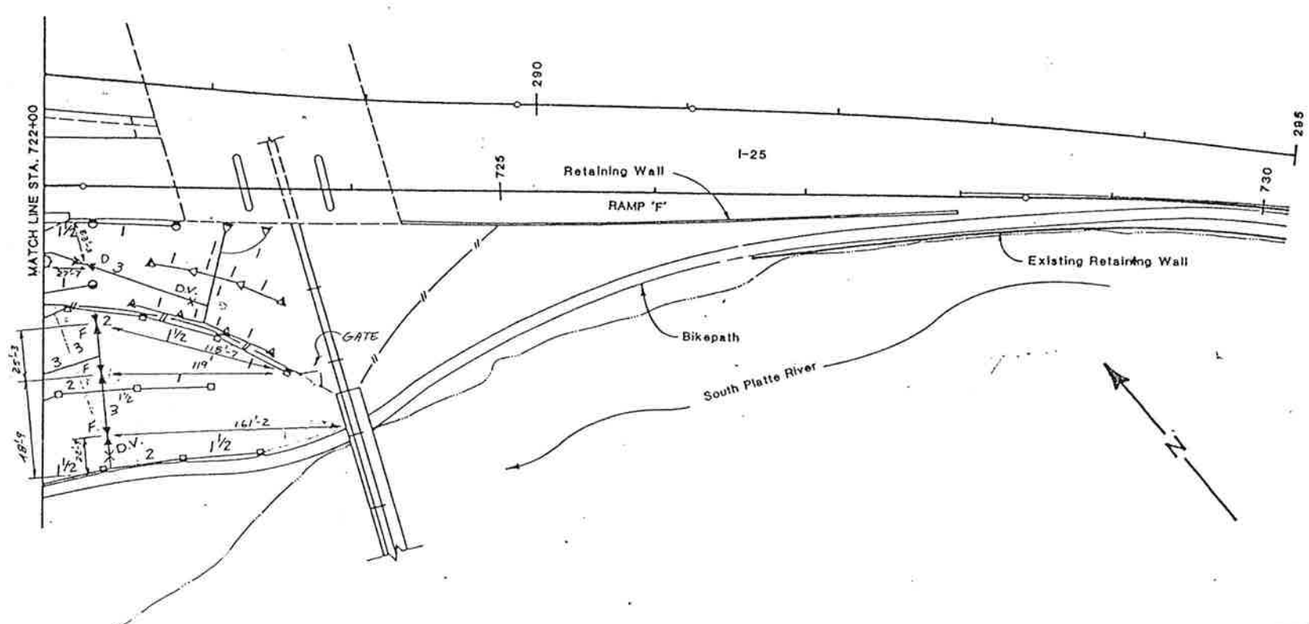

OF COLORADO
DEPARTMENT OF HIGHWAYS
ION OF HIGHWAYS:
H. FORM NO. 126:
FEB. 1984

AS CONSTRUCTED				
NO REVISIONS 9/30/87 REVISED	VOID			

FED. ROAD REGION	DIVISION	PROJ. NO.	SHEET NO.	SHEET TOTALS
VIII	COLO.	IR 25-2(187)	58	~~170~~ 177

DESIGN D.S.
DATE 1/86

IRRIGATION DETAILS

I-6

* BACKFLOW PREVENTER SHALL HAVE A BRONZE BODY WITH STAINLESS STEEL INTERNAL PARTS.

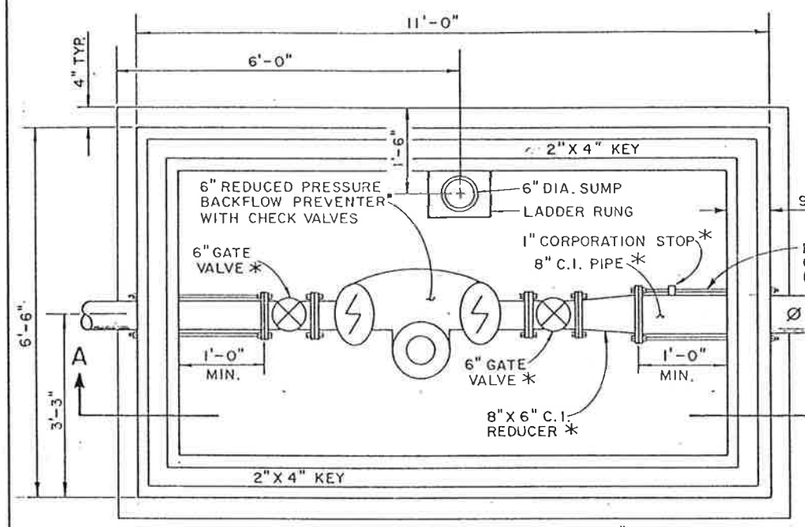

FOR REINFORCING STEEL SEE SECTION A.

* INCLUDE IN ITEM 6" CAST IRON PIPE
Ø BEGIN 8" PVC PIPE 5'-0" FROM VAULT ADAPTER INCLUDED IN 6" CAST IRON PIPE

PLAN OF PIPING & FLOOR SLAB

BACKFLOW PREVENTER VAULT

VAULT AND APPURTENANCES EXCLUDING PIPING TO BE PAID FOR AS METER VAULT.

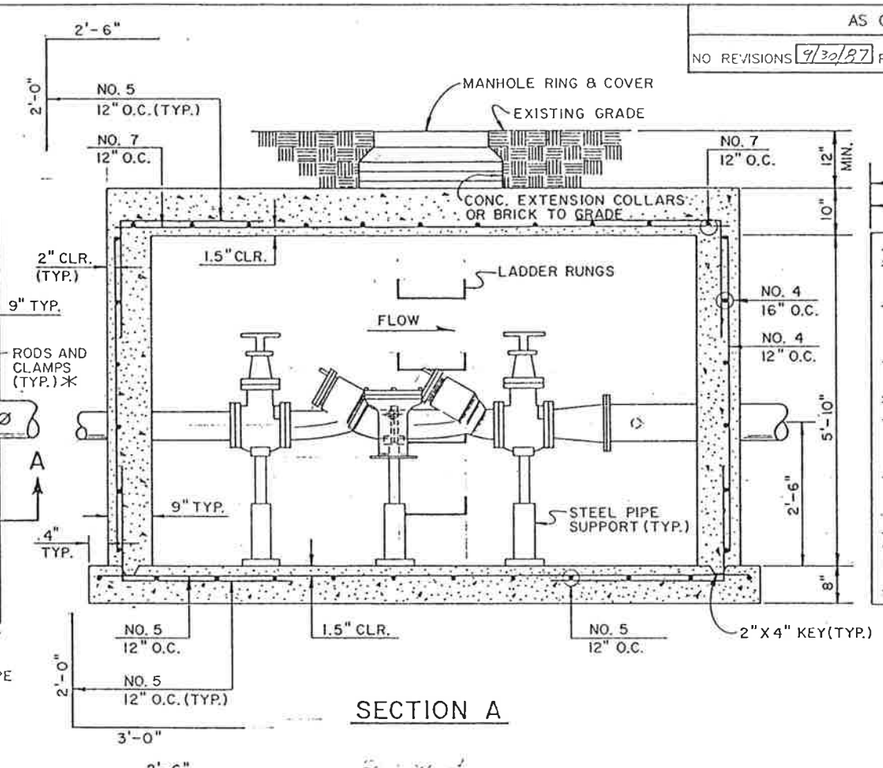

SECTION A

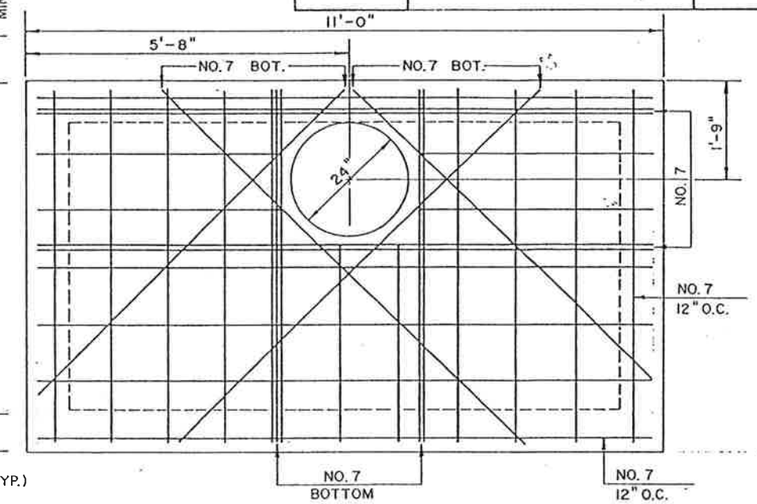

ROOF SLAB

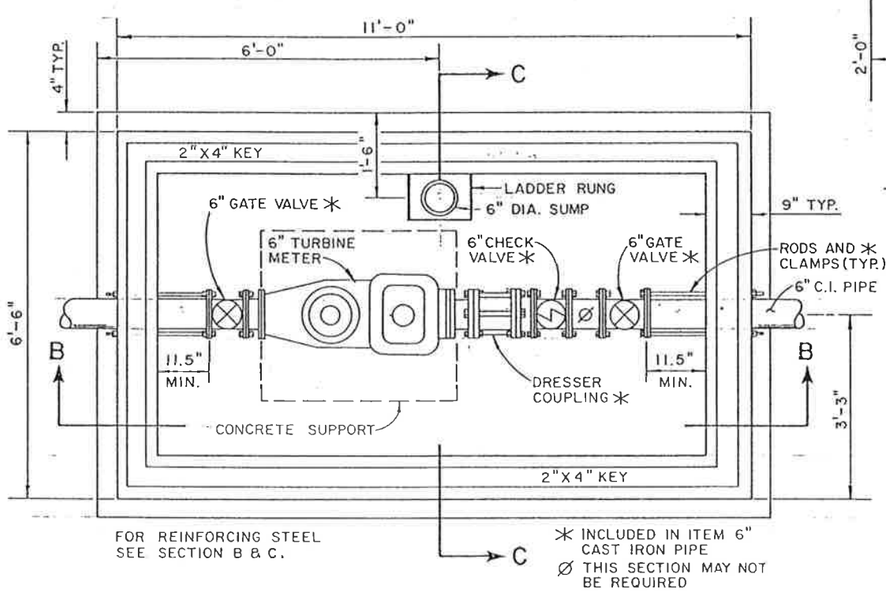

FOR REINFORCING STEEL SEE SECTION B & C.

* INCLUDED IN ITEM 6" CAST IRON PIPE
Ø THIS SECTION MAY NOT BE REQUIRED

PLAN OF PIPING & FLOOR SLAB

METER VAULT

VAULT AND APPURTENANCES EXCLUDING PIPING TO BE PAID FOR AS METER VAULT.

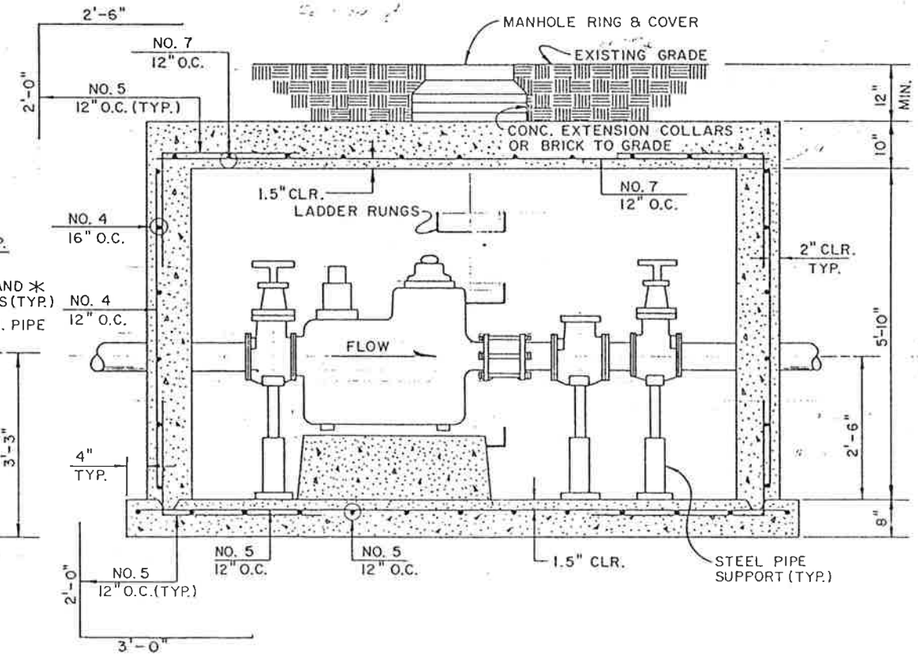

SECTION B

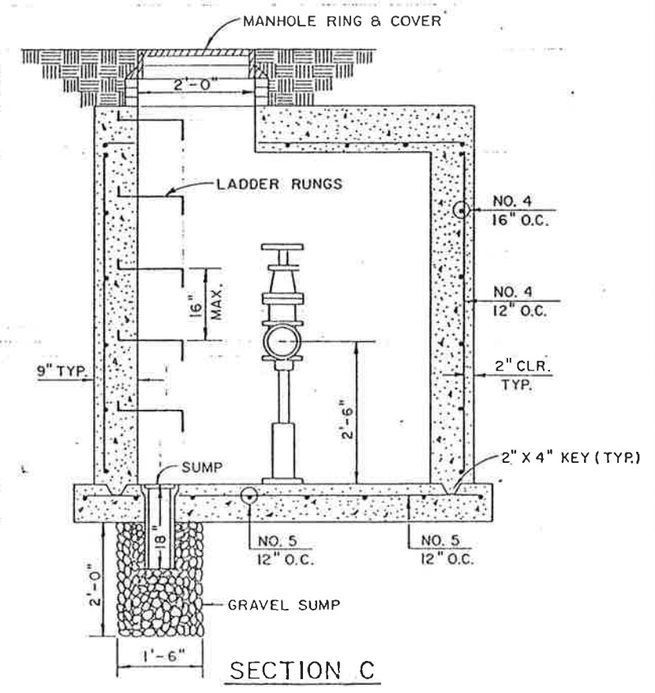

SECTION C

OF COLORADO
DEPARTMENT OF HIGHWAYS
ON OF HIGHWAYS:
H. FORM NO. 126:
EB. 1984

AS CONSTRUCTED			
NO REVISIONS 9/30/87	REVISED		VOID

FED. ROAD REGION	DIVISION	PROJ. NO.	SHEET NO.	SHEET TOTALS
VIII	COLO.	IR 25-2(187)	59	~~170~~ 172

DESIGN D.S.
DATE 1/86

IRRIGATION DETAILS

I-7

REVISIONS			
R-1	6-5-86	Revised Note	J.K.K.

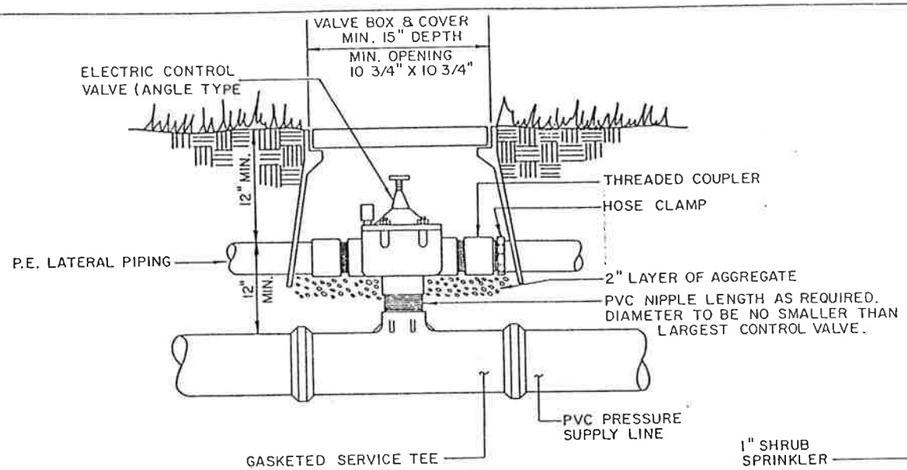

DETAIL OF VALVE & VALVE BOX

VALVE BOX, HOSE CLAMPS, AGGREGATE, AND NIPPLES TO BE SUBSIDIARY TO AUTOMATIC CONTROL VALVE ITEM.

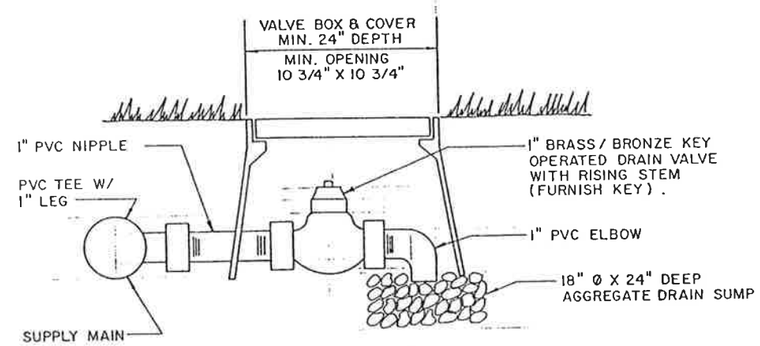

DRAIN VALVE DETAIL

VALVE BOX AND FITTINGS ARE SUBSIDIARY TO 1" DRAIN VALVE ITEM

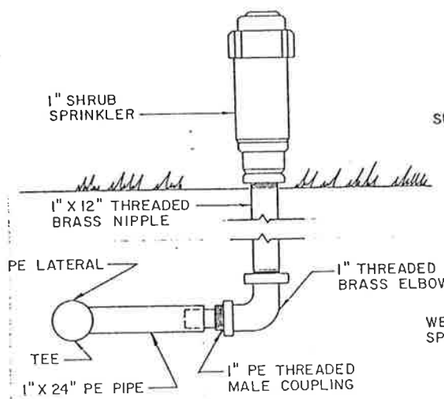

TYPICAL SHRUB HEAD INSTALLATION

ALL FITTINGS ARE INCLUDED IN SHRUBBERY SPRAY PAY ITEM

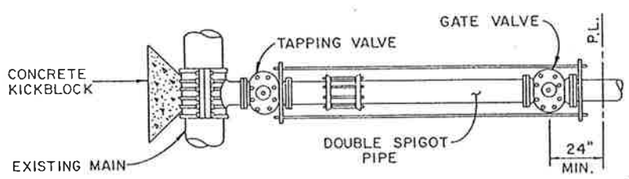

TAPPING CONNECTION

ALL MATERIAL AND WORK IS INCLUDED IN FORCE ACCOUNT "RELOCATE WATER TAP" EXCEPT FOR GATE VALVE.

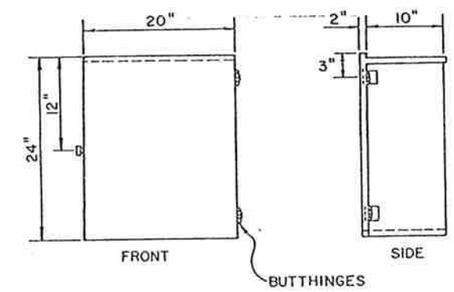

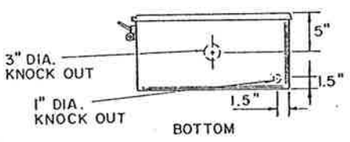

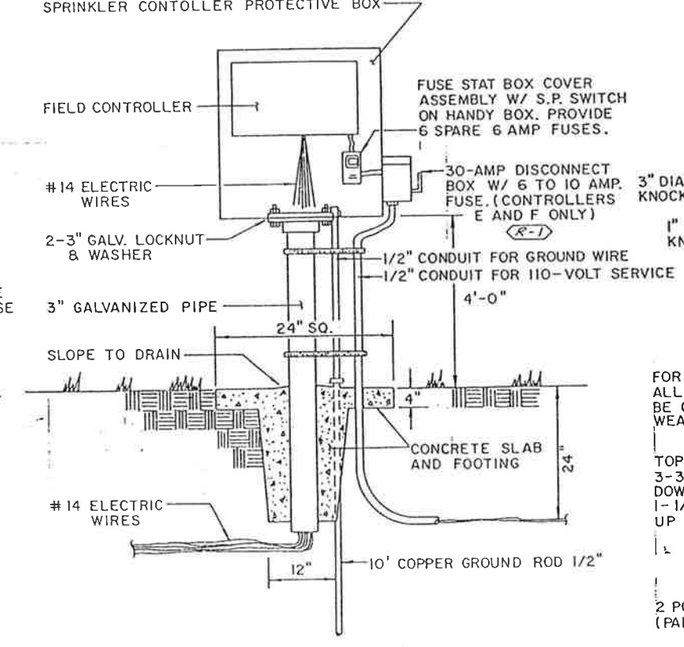

PIPE MOUNTED CONTROLLER DETAIL

ALL MATERIAL IS INCLUDED UNDER AUTOMATIC CONTROLLER PAY ITEM.

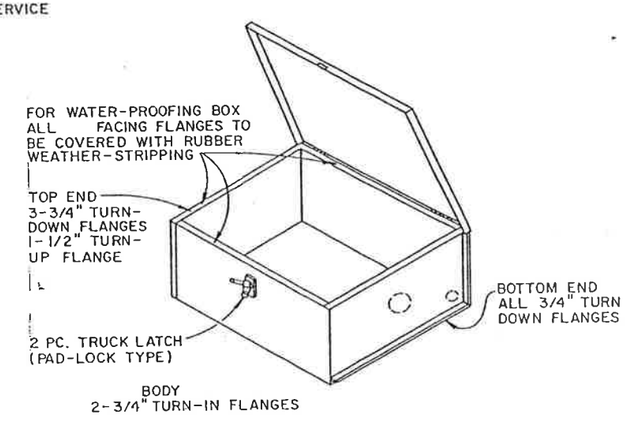

WEATHER-PROOF, VANDAL-PROOF, SPRINKLER CONTROLLER BOX

ALL MATERIAL IS INCLUDED UNDER AUTOMATIC CONTROLLER PAY ITEM.

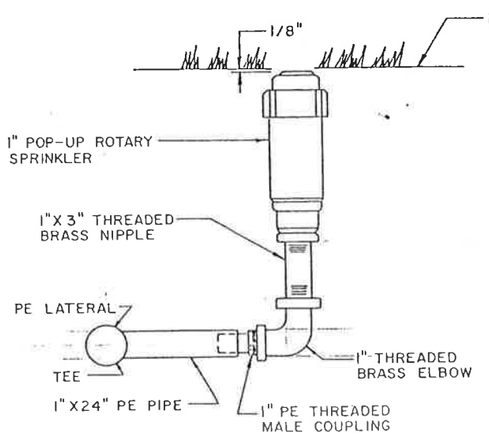

TYPICAL POP-UP HEAD INSTALLATION

ALL FITTINGS ARE INCLUDED IN POP-UP HEAD PAY ITEM.

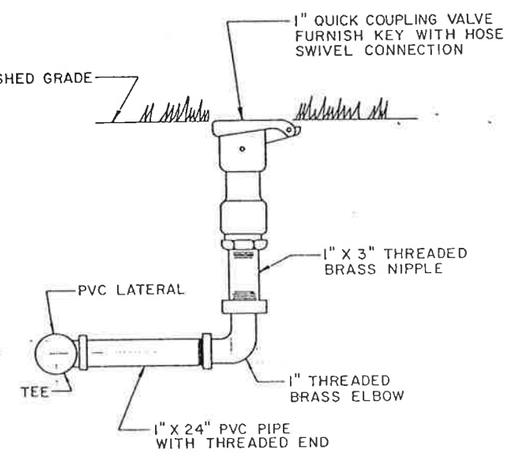

TYPICAL QUICK COUPLER INSTALLATION

ALL FITTINGS ARE INCLUDED IN QUICK COUPLER PAY ITEM.