FEDERAL BOULEVARD/US 6 INTERCHANGE
WATER LINE RE-ALIGNMENT

CDOT PROJECT NO. 17583
DENVER, COLORADO
DECEMBER 2010

LEGEND

EXISTING	FEATURE	PROPOSED
	PROPERTY LINE	
	EASEMENT	
5670	MAJOR CONTOUR	5670
	MINOR CONTOUR	
X X	FENCE	
8"W	WATER LINE	12"W
WV	WATER VALVE	
S SS	SANITARY SEWER	
SD	STORM SEWER LINE	
FO	FIBER OPTIC LINE	
P-UG	UNDERGROUND POWER	
P-OH	OVERHEAD POWER	
TEL	TELEPHONE	
G	GAS	
	POWER POLE	
	TRAFFIC SIGNAL POLE	
	DECIDUOUS TREE	
	CONIFEROUS TREE	
BU	BUSH	
	RIPRAP	
CTL	CONTROL POINT	
	AREA INLET	
	STORM SEWER MANHOLE	
	GRATE INLET	
	ANTENNA	
	BOLLARD	
	TRANSFORMER	
	CURB INLET	
WV	WATER VALVE	
	SECTION CORNER	
	SIGN	
IRR	IRRIGATION VALVE	
	GUY WIRE	
C-5	BORING LOCATION	
ER	ELECTRICAL RISER	
E	ELECTRICAL BOX	
TS	TRAFFIC SIGNAL BOX	
	TRAFFIC SIGNAL POLE	
	BASELINE	12+00
	LAND AQUISITION	

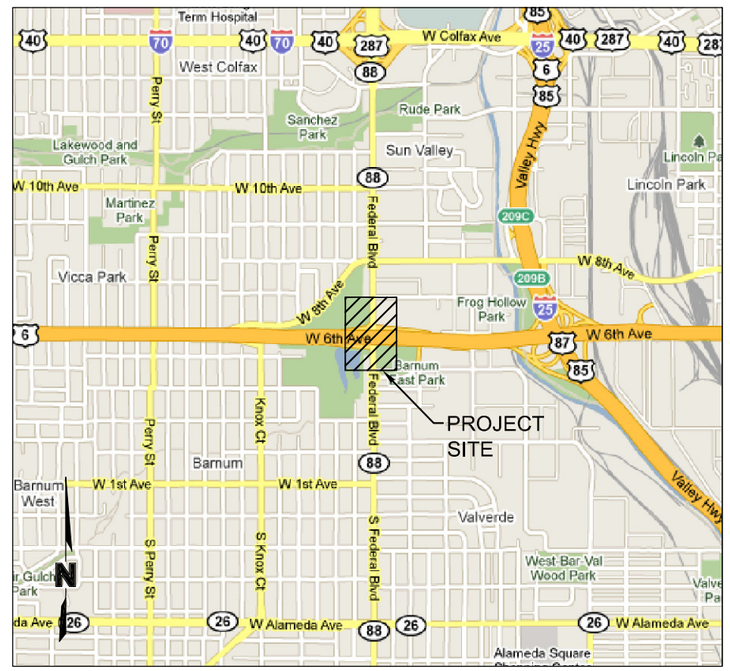

VICINITY MAP
NTS

DENVER WATER

XXXXXXXXXXXXXXXX, SENIOR CIVIL ENGINEER DATE

XXXXXXXXXXXXXXXX, PROJECT MANAGER DATE

PREPARED BY:

OLSSON ASSOCIATES
143 Union Boulevard
Suite 700
Lakewood, CO 80228-1825
TEL 720.962.6072
FAX 720.962.6195

DAVID P. KRICKBAUM, P.E. 25746, PROJECT MANAGER DATE

INDEX OF DRAWINGS

SHEET NAME	SHEET NUMBER	SHEET DESCRIPTION
G1	1	COVER SHEET
G2	2	DENVER WATER GENERAL NOTES AND SCHEDULE OF APPROXIMATE QUANTITIES
G3	3	DENVER WATER ABBREVIATIONS LIST
HC1	4	HORIZONTAL CONTROL PLAN
PP1	5	12" WATER LINE RE-ALIGHMENT PLAN AND PROFILE STA. 7+26.36 TO 3+00
PP2	6	12" WATER LINE RE-ALIGNMENT PLAN AND PROFILE STA. 3+00 TO 1+00
PP3	7	30" WATER LINE RE-ALIGNMENT PLAN AND PROFILE STA. 16+26.23 TO 12+00
PP4	8	30" WATER LINE RE-ALIGNMENT PLAN AND PROFILE STA. 12+00 TO 10+00
DT1	9	TYPICAL EXPANSION JOINT VAULT DETAIL
DT2	10	12" WATER RE-ALIGNMENT EXPANSION JOINT VAULT PLAN
DT3	11	12" WATER RE-ALIGNMENT EXPANSION JOINT VAULT SECTIONS
DT4	12	36" WATER RE-ALIGNMENT EXPANSION JOINT VAULT PLAN
DT5	13	36" WATER RE-ALIGNMENT EXPANSION JOINT VAULT SECTIONS
DT6-DT9	14-17	DENVER WATER TYPICAL DETAILS

FOR SUBMITTAL
NOT FOR CONSTRUCTION

PROJECT BENCHMARK: XXXX

CALL UTILITY NOTIFICATION CENTER OF COLORADO
811
CALL 3-BUSINESS DAYS IN ADVANCE BEFORE YOU DIG, GRADE, OR EXCAVATE FOR THE MARKING OF UNDERGROUND MEMBER UTILITIES

OLSSON ASSOCIATES
143 Union Boulevard, Suite 700
Lakewood, CO 80228-1825
TEL 720.962.6072
FAX 720.962.6195
www.oaconsulting.com

DENVER WATER

REV. NO.	DATE	REVISIONS DESCRIPTION

REVISIONS

COVER SHEET

FEDERAL BOULEVARD/US 6 INTERCHANGE
WATER LINE RE-ALIGNMENT

DENVER, COLORADO

2010

drawn by: CU
checked by: DK
approved by: DK
QA/QC by: DK
project no.: 009-2064
drawing no.: 1
date: 12.03.2010

G1
1 of 17

DWG: F:\Projects\009-2064_WTRS\Preliminary_Plans\Water Line Plans\92064_G1-G3.dwg USER: cuhrich
DATE: Dec 03, 2010 12:47pm XREFS: 92064_22x34TB

DENVER WATER GENERAL NOTES TO BE ADDED

SCHEDULE OF APPROXIMATE QUANTITIES

ITEM NO.	DESCRIPTION	UNIT	QUANTITY

FOR SUBMITTAL
NOT FOR CONSTRUCTION

CALL UTILITY NOTIFICATION CENTER OF COLORADO
811
CALL 3-BUSINESS DAYS IN ADVANCE BEFORE YOU DIG, GRADE, OR EXCAVATE FOR THE MARKING OF UNDERGROUND MEMBER UTILITIES.

OLSSON ASSOCIATES
143 Union Boulevard, Suite 700
Lakewood, CO 80228-1825
TEL 720.962.6072
FAX 720.962.6195
www.oaconsulting.com

DENVER WATER

REV. NO.	DATE	REVISIONS DESCRIPTION

REVISIONS

DENVER WATER GENERAL NOTES AND SCHEDULE OF APPROXIMATE QUANTITIES

FEDERAL BOULEVARD/US 6 INTERCHANGE WATER LINE RE-ALIGNMENT

DENVER, COLORADO

2010

drawn by: CU
checked by: DS
approved by: DK
QA/QC by: DK
project no.: 009-2064
drawing no.: 2
date: 4.2.10

G2

DWG: F:\Projects\009-2064_WTRS\Preliminary_Plans\Water Line Plans\92064_G1-G3.dwg USER: cuhrich
DATE: Dec 03, 2010 12:48pm XREFS: 92064_22x34TB

@	AT
°C	DEGREE CELSIUS
°F	DEGREE FAHRENHEIT
ø	DIAMETER
AASHTO	AMERICAN ASSOCIATION of STATE HIGHWAY and TRANSPORTATION OFFICIALS
AB	ANCHOR BOLT
ABS	ACRYLONITRILE–BUTADIENE–STYRENE
ABUT	ABUTMENT
AC	ASPHALTIC CONCRETE, ALTERNATING CURRENT
ACI	AMERICAN CONCRETE INSTITUTE
ACP	ASBESTOS–CEMENT PIPE
ACS MH	ACCESS MANHOLE
AD	AREA DRAIN
ADA	AMERICANS WITH DISABILITIES ACT
ADDL	ADDITIONAL
ADJ	ADJUSTABLE, ADJOINING
AFF	ABOVE FINISH FLOOR
AFG	ABOVE FINISH GRADE
AGGR	AGGREGATE
AH	AHEAD
AHR	ANCHOR
AISC	AMERICAN INSTITUTE OF STEEL CONSTRUCTION
AISI	AMERICAN IRON AND STEEL INSTITUTE
ALT	ALTERNATE, ALTITUDE
ALUM	ALUMINUM
AMP	AMPERES
ANOD	ANODIZE
AP	ANGLE POINT
APPD	APPROVED
APPROX	APPROXIMATE
ARCH	ARCHITECTURAL
ASSY	ASSEMBLY
ASTM	AMERICAN SOCIETY FOR TESTING AND MATERIALS
AUTO	AUTOMATIC
AUX	AUXILIARY
AVE	AVENUE
AVG	AVERAGE
AWS	AMERICAN WELDING SOCIETY
AWWA	AMERICAN WATER WORKS ASSOCIATION
BD	BOARD
BDD	BACKDRAFT DAMPER
BF	BLIND FLANGE, BOTH FACES
BFV	BUTTERFLY VALVE
BHP	BRAKE HORSEPOWER
BK	BACK
BLDG	BUILDING
BLVD	BOULEVARD
BM	BENCH MARK, BEAM
BNSF	BURLINGTON NORTHERN/SANTA FE RAILROAD
BO	BLOW OFF
BOC	BACK OF CURB
BOF	BOTTOM OF FOOTING
BOT	BOTTOM
BRG	BEARING
BSP–40	BLACK STEEL PIPE, SCHEDULE 40
BSP–80	BLACK STEEL PIPE, SCHEDULE 80
BSTC	BOLTED SLEEVE TYPE COUPLING
BTU	BRITISH THERMAL UNITS
BTWN	BETWEEN
BUR	BUILT UP ROOFING
BV	BALL VALVE
BVC	BEGINNING OF VERTICAL CURVE
BWS	BACKWASH SUPPLY
BWW	BACKWASH WASTE
℄	CENTERLINE
C	CHANNEL (BEAM)
C TO C	CENTER TO CENTER
C&CT	CONVENTIONAL & CHEMICAL TREATMENT
C&G	CURB AND GUTTER
CB	CATCH BASIN, CIRCUIT BREAKER
CCP	CONCRETE CYLINDER PIPE (PRETENSION)
CFM	CUBIC FEET PER MINUTE
CFS	CUBIC FEET PER SECOND
CHEM	CHEMICAL
CHKD	CHECKED, CHECKERED
CHKV	CHECK VALVE
CHWR	CHILLED WATER RETURN
CHWS	CHILLED WATER SUPPLY
CI	CAST IRON
CIMJ	CAST IRON MECHANICAL JOINT
CIP	CAST IRON PIPE, CAST–IN–PLACE
CIR	CIRCLE
CISP	CAST IRON SOIL PIPE
CJ	CONSTRUCTION JOINT
CLG	CEILING
CLO	CLOSET
CLR	CLEAR
CLSM	CONTROLLED LOW STRENGTH MATERIAL
CMP	CORRUGATED METAL PIPE
CMU	CONCRETE MASONRY UNIT
CNR	CORNER
CO	CLEANOUT, CARBON MONOXIDE
CO_2	CARBON DIOXIDE
COL	COLUMN
CONC	CONCRETE, CONCENTRIC
COND	CONDUIT
CONN	CONNECT
CONST	CONSTRUCTION
CONT	CONTINUE, CONTINUOUS
CONT JT	CONTRACTION JOINT
COORD	COORDINATE
CPLG	COUPLING
CPVC	CHLORINATED POLY (VINYL CHLORIDE)
CR	CONDENSATE RETURN
CRS	COLD ROLLED STEEL
CTR	CENTER
CT	COURT
CTE	COAL–TAR ENAMEL
CTL JT	CONTROL JOINT
CTRD	CENTERED
CTRL	CONTROL
CTV	CABLE TELEVISION
CU	CUBIC, COPPER
CW	COLD WATER
D	PENNY (NAIL SIZE)
DB	DISTRIBUTION BOX, DRY BULB
DBA	DEFORMED BAR ANCHOR
DBL	DOUBLE
DC	DIRECT CURRENT
DCW	DOMESTIC COLD WATER
DEMO	DEMOLISH
DET	DETAIL
DF	DOUGLAS FIR, DRINKING FOUNTAIN
DHW	DOMESTIC HOT WATER
DI	DUCTILE IRON, DROP INLET
DIAG	DIAGONAL
DIL	DILUTE
DIM	DIMENSION
DIMJ	DUCTILE IRON MECHANICAL JOINT
DIP	DUCTILE IRON PIPE
DIST	DISTANCE, DISTRIBUTED, DISTRICT
DN	DOWN
DPS	DIFFERENTIAL PRESSURE SWITCH
DR	DRAIN, DOOR, DRIVE
DT	DOUBLE TEE
DW	DENVER WATER, DOMESTIC WATER
DWG	DRAWING
DWL	DOWEL
E	EAST, ELECTRIC
EA	EACH
EAT	ENTERING AIR TEMPERATURE
ECC	ECCENTRIC
EF	EACH FACE
EFL	EFFLUENT
EL	ELEVATION
ELB	ELBOW
ELC	ELECTRICAL LOAD CENTER
ELEC	ELECTRIC, ELECTRICAL
EMBED	EMBEDMENT
ENGR	ENGINEER
EO	EMERGENCY OVERFLOW
EOA	EDGE OF ASPHALT
EQ	EQUAL
EQL SP	EQUALLY SPACED
EQN	EQUATION
EQUIP	EQUIPMENT
ESEW	EMERGENCY SHOWER/EYEWASH
EVC	END OF VERTICAL CURVE
EW	EACH WAY
EWT	ENTERING WATER TEMPERATURE
EXH	EXHAUST
EXIST	EXISTING
EXP	EXPOSED
EXP JT	EXPANSION JOINT
EXT	EXTERIOR, EXTEND, EXTENSION
f'c	28 DAY COMPRESSIVE STRENGTH OF CONCRETE
fy	YIELD STRENGTH
FC	FLEXIBLE COUPLING
FCA	FLANGED COUPLING ADAPTER
FD	FLOOR DRAIN
FDA	FLOOR DRAIN W/INTEGRAL TRAP
FDTN	FOUNDATION
FE	FIRE EXTINGUISHER
FEC	FIRE EXTINGUISHER CABINET
$FeCl_3$	FERRIC CHLORIDE
FF	FINISH FLOOR, FAR FACE
FG	FINISH GRADE
FH	FIRE HYDRANT
FIG	FIGURE
FIN	FINISH
FL	FLOW LINE
FLASH	FLASHING
FLG	FLANGE
FLR	FLOOR
FLTR	FILTER
FO	FIBER OPTIC
FOR	FUEL OIL RETURN
FOS	FUEL OIL SUPPLY
FPM	FEET PER MINUTE
FPS	FEET PER SECOND
FPT	FEMALE PIPE THREAD
FRMG	FRAMING
FRP	FIBERGLASS REINFORCED PLASTIC
FS	FLOW SWITCH
FT	FOOT OR FEET
FTG	FOOTING
FWD	FORWARD
G	NATURAL GAS
GA	GAGE
GAL	GALLON
GALV	GALVANIZED
GALVI	GALVANIZED IRON
GALVSTL	GALVANIZED STEEL
GB	GRAB BAR
GC	GROOVED COUPLING
GCF	GROOVED COUPLING FITTING
GEN	GENERATOR
GFCI	GROUND FAULT CIRCUIT INTERRUPTER
GL	GLASS
GND	GROUND (ELECTRICAL)
GPD	GALLONS PER DAY
GPH	GALLONS PER HOUR
GPM	GALLONS PER MINUTE
GSP	GALVANIZED STEEL PIPE
GV	GATE VALVE
GVL	GRAVEL
GYP BD	GYPSUM WALLBOARD
HAB	HEADED ANCHOR BOLT
HAS	HEADED ANCHOR STUD
HDW	HARDWARE
HEX	HEXAGONAL
HM	HOLLOW METAL
HNDRL	HANDRAIL
HORIZ	HORIZONTAL
HP	HORSEPOWER, HIGH PRESSURE
HPT	HIGH POINT
HPU	HYDRAULIC POWER UNIT
HR	HOSE RACK, HOUR
HS	HIGH STRENGTH
HT	HEIGHT
HTIP	HEAT TRACE INSULATED PIPE
HV	HOSE VALVE
HVY	HEAVY
HWR	HOT WATER RETURN
HWS	HOT WATER SUPPLY
HWT	HOT WATER TANK
HWY	HIGHWAY
HYD	HYDRANT, HYDRAULIC
ICBO	INTERNATIONAL CONFERENCE of BUILDING OFFICIALS
ID	INSIDE DIAMETER
IE	INVERT ELEVATION
IF	INSIDE FACE
IN	INCH
INFL	INFLUENT
INSTL	INSTALL
INSTM	INSTRUMENTATION
INSUL	INSULATE, INSULATION
INT	INTERIOR
INV	INVERT
IP	IRON PIPE
IRR	IRRIGATION
JAN	JANITOR
JT	JOINT
KB	KICKBLOCK
KIP	THOUSAND POUNDS
KSI	KIPS PER SQUARE INCH
KSF	KIPS PER SQUARE FOOT
kVA	KILOVOLT AMPERES
kVAR	KILOVOLT AMPERES REACTIVE
kW	KILOWATT
kWh	KILOWATT–HOUR
L	ANGLE
LAB	LABORATORY
LAT	LEAVING AIR TEMPERATURE
LAV	LAVATORY
LBS	POUNDS
LF	LINEAR FEET
LH	LEFT HAND
LLV	LONG LEG VERTICAL
LNTL	LINTEL
LOC	LOCATION, LOCATE
LONG	LONGITUDINAL
LPG	LIQUEFIED PETROLEUM GAS
LPT	LOW POINT
LR	LONG RADIUS
LT	LEFT, LIGHT
LVR	LOUVER
LWT	LEAVING WATER TEMPERATURE
MAX	MAXIMUM
MCC	MOTOR CONTROL CENTER
MECH	MECHANICAL
MFD	MANUFACTURED
MFR	MANUFACTURER
MGD	MILLION GALLONS PER DAY
MH	MANHOLE
MIN	MINIMUM, MINUTE
MISC	MISCELLANEOUS
MJ	MECHANICAL JOINT
MO	MASONRY OPENING
MPT	MALE PIPE THREAD
MS	MILD STEEL
MTL	METAL
MW	MEGAWATT
MWS	MAXIMUM WATER SURFACE
N	NORTH
N/A	NOT APPLICABLE
NaCl	SODIUM CHLORIDE BRINE
NaOH	SODIUM HYDROXIDE
NC	NORMALLY CLOSED
NF	NEAR FACE
NFPA	NATIONAL FIRE PROTECTION ASSOCIATION
NIC	NOT IN CONTRACTOR
NO	NUMBER, NORMALLY OPEN
NPT	NATIONAL PIPE THREAD
NTS	NOT TO SCALE
NWS	NORMAL WATER SURFACE
O_2	OXYGEN
OA	OVERALL, OUTSIDE AIR
OBD	OPPOSED BLADE DAMPER
OC	ON CENTER
OD	OUTSIDE DIAMETER
OF	OUTSIDE FACE
OH	OVERHEAD
OHW	OVERHEAD WIRE
OHWL	ORDINARY HIGH WATER LINE
OPNG	OPENING
OPP	OPPOSITE
OSD	OPEN SITE DRAIN
OSHA	OCCUPATIONAL SAFETY & HEALTH ADMINISTRATION
OVFL	OVERFLOW
OZ	OUNCE
PA	PUBLIC ADDRESS
PBD	PARALLEL BLADE DAMPER
PC	POINT OF CURVE
PCCP	PRESTRESSED CONCRETE CYLINDER PIPE
PCF	POUNDS PER CUBIC FOOT
PE	PLAIN END
PERIM	PERIMETER
PF	POWER FACTOR
PI	POINT OF INTERSECTION
PJF	PREMOLDED JOINT FILLER
P	PROPERTY LINE
PL	PLATE (STEEL), PLACE
PL LAM	PLASTIC LAMINATE
PLYWD	PLYWOOD
PNL	PANEL
PREFAB	PREFABRICATED
PREFIN	PREFINISHED
PRELIM	PRELIMINARY
PRESS	PRESSURE
PRI	PRIMARY
PROJ	PROJECTION, PROJECT
PROP	PROPERTY
PRV	PRESSURE REGULATING VALVE
PS	PUMP STATION
PSF	POUNDS PER SQUARE FOOT
PSI	POUNDS PER SQUARE INCH, GAUGE
PSIA	POUNDS PER SQUARE INCH, ABSOLUTE
PT	POINT OF TANGENCY, POST TENSIONED
PV	PLUG VALVE
PVC	POLY (VINYL CHLORIDE)
PVMT	PAVEMENT
Q	RATE OF FLOW
R	RADIUS
RA	RETURN AIR
RCCP	REINFORCED CONCRETE CYLINDER PIPE
RCP	REINFORCED CONCRETE PIPE
RD	ROOF DRAIN, ROAD
RDCR	REDUCER
REF	REFER, REFERENCED
REFR	REFRIGERATOR
REINF	REINFORCED, REINFORCING, REINFORCE
REQD	REQUIRED
REQMTS	REQUIREMENTS
RES	RESERVOIR
RET	RETURN
RH	RIGHT HAND, ROOF HATCH
RM	ROOM
RO	ROUGH OPENING
ROW	RIGHT–OF–WAY
RPM	REVOLUTIONS PER MINUTE
RR	RAILROAD
RST	REINFORCING STEEL
RT	RIGHT
RV	ROOF VENT
RWD	REDWOOD
S	SOUTH, SLOPE, I–BEAM
SA	SUPPLY AIR
SAN	SANITARY SEWER
SC	SOLID CORE
SCFM	STANDARD CUBIC FEET PER MINUTE
SCHED	SCHEDULE
SD	STORM DRAIN, SOAP DISPENSER, SUPPLY DIFFUSER
SEC	SECONDARY, SECONDS
SECT	SECTION
SF	SQUARE FEET, SQUARE FOOT
SG	SUPPLY GRILLE
SHT	SHEET
SIM	SIMILAR
SJI	STEEL JOIST INSTITUTE
SLV	SLEEVE
SOLN	SOLUTION
SP	STATIC PRESSURE
SPA	SPACING
SPD	SUMP PUMP DISCHARGE
SPEC	SPECIFICATIONS, SPECIFIED
SPLY	SUPPLY
SQ	SQUARE
SST	STAINLESS STEEL
ST	STREET
STA	STATION
STD	STANDARD
STIF	STIFFENER
STL	STEEL
STRM	STORM SEWER
STRUCT	STRUCTURE, STRUCTURAL
SUSP	SUSPEND
SW	SURFACE WASH
SYMM	SYMMETRICAL
T&B	TOP AND BOTTOM
T&G	TONGUE AND GROOVE
TAN	TANGENT
TAS	THREADED ANCHOR STUD
TBG	TUBING
TDH	TOTAL DYNAMIC HEAD
TECH	TECHNICAL
TEL, T	TELEPHONE
TEMP	TEMPERATURE, TEMPORARY
TH	TEST HOLE
THD	THREAD, THREADED
THK	THICKNESS
THKD	THICKENED
THM	THERM
TO	TOP OF
TOC	TOP OF CURB
TOP	TOP OF PIPE
TORQ	TORQUE
TOW	TOP OF WALL
TPD	TONS PER DAY
TPH	TOILET PAPER HOLDER
TRANSV	TRANSVERSE
TSTAT	THERMOSTAT
TSTL	TUBE STEEL
TT	THRUST TIE
TYP	TYPICAL
UBC	UNIFORM BUILDING CODE
UG	UNDERGROUND
UH	UNIT HEATER
UNO	UNLESS NOTED OTHERWISE
UPRR	UNION PACIFIC RAILROAD
UR	URINAL
V	VENT, VOLT
VA	VOLT AMPERE
VAC	VACUUM, VACANT
VAR	VOLT AMPERE REACTIVE
VC	VERTICAL CURVE
VERT	VERTICAL
VTR	VENT THRU ROOF
W	WEST, WATER, WIDE FLANGE (BEAM), WATTS
W/	WITH
W/O	WITHOUT
WB	WET BULB
WC	WATER CLOSET, WATER COLUMN
WDW	WINDOW
WH	WATER HEATER
WS	WATER STOP, WELDED STEEL
WSP	WELDED STEEL PIPE
WWF	WELDED WIRE FABRIC
XFMR	TRANSFORMER
XING	CROSSING
YD	YARD

FOR SUBMITTAL
NOT FOR CONSTRUCTION

CALL UTILITY NOTIFICATION CENTER OF COLORADO
811
CALL 3-BUSINESS DAYS IN ADVANCE BEFORE YOU DIG, GRADE, OR EXCAVATE FOR THE MARKING OF UNDERGROUND MEMBER UTILITIES.

OLSSON ASSOCIATES
143 Union Boulevard, Suite 700
Lakewood, CO 80228-1825
TEL 720.962.6072
FAX 720.962.6195
www.oaconsulting.com

DENVER WATER

REV. NO.	DATE	REVISIONS DESCRIPTION

REVISIONS

DENVER WATER ABBREVIATIONS LIST

FEDERAL BOULEVARD/US 6 INTERCHANGE
WATER LINE RE-ALIGNMENT

DENVER, COLORADO

2010

drawn by:	CU
checked by:	DK
approved by:	DK
QA/QC by:	DK
project no.:	009-2064
drawing no.:	3
date:	12.03.2010

DWG: F:\Projects\009-2064_WTRS\Preliminary_Plans\Water Line Plans\92064_GI-03.dwg USER: cuhrich
DATE: Dec 03, 2010 12:49pm XREFS: 92064_22x34TB

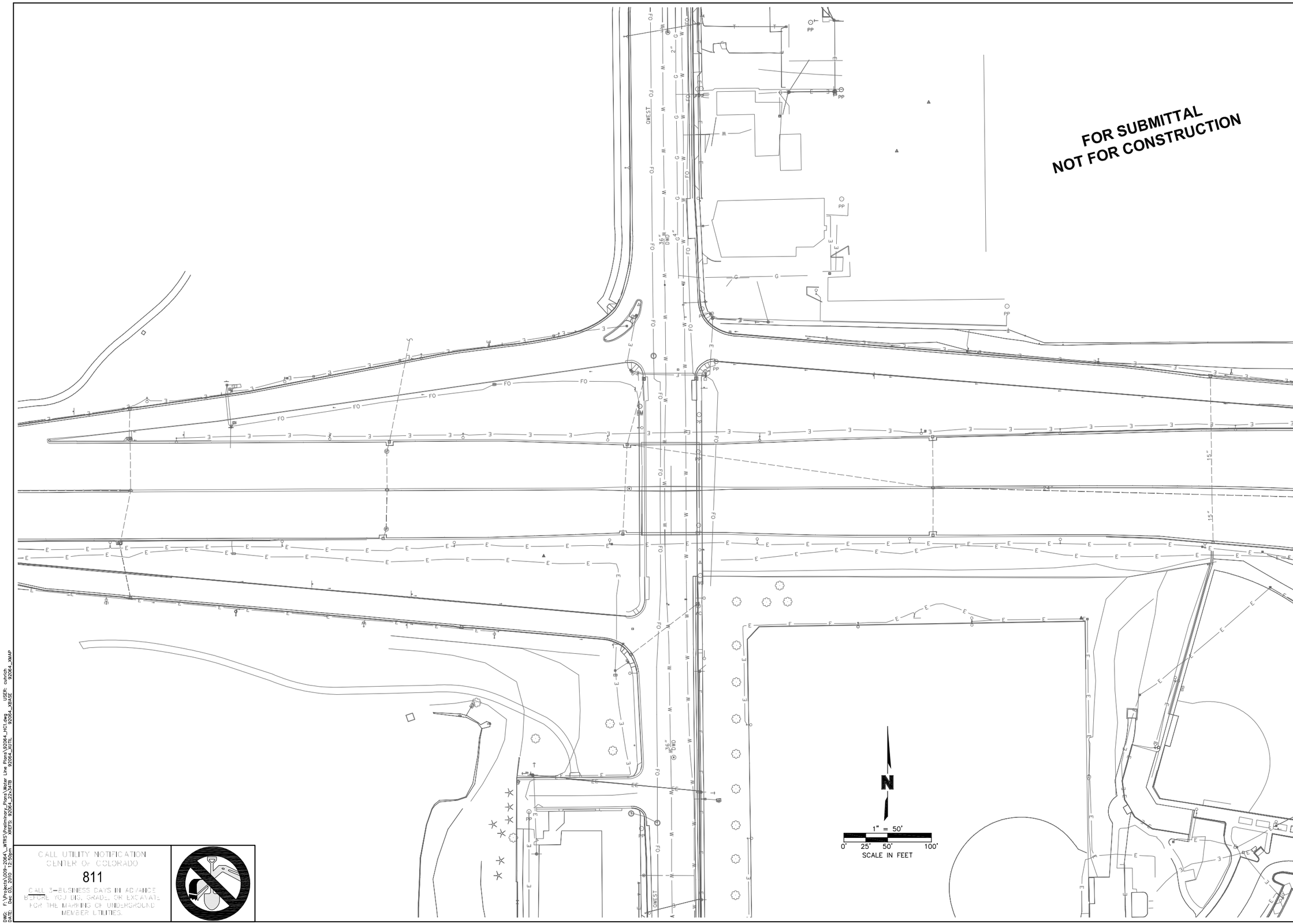

CALL UTILITY NOTIFICATION CENTER Of COLORADO

811

CALL 3-BUSINESS DAYS IN ADVANCE BEFORE YOU DIG, GRADE, OR EXCAVATE FOR THE MARKING OF UNDERGROUND MEMBER UTILITIES.

DWG: F:\Projects\009-2064_WTRS\Preliminary_Plans\Water Line Plans\92064_HC1.dwg USER: cuhrich
DATE: Dec 03, 2010 12:50pm XREFS: 92064_22x34TB 92064_XUTIL 92064_XBASE 92064_XMAP

OLSSON ASSOCIATES
143 Union Boulevard, Suite 700
Lakewood, CO 80228-1825
TEL 720.962.6072
FAX 720.962.6195
www.oaconsulting.com

DENVER WATER

REV. NO.	DATE	REVISIONS DESCRIPTION

REVISIONS

HORIZONTAL CONTROL PLAN

FEDERAL BOULEVARD/US 6 INTERCHANGE
WATER LINE RE-ALIGNMENT

DENVER, COLORADO

2010

drawn by:	CU
checked by:	DK
approved by:	DK
QA/QC by:	DK
project no.:	009-2064
drawing no.:	4
date:	12.03.2010

HC1

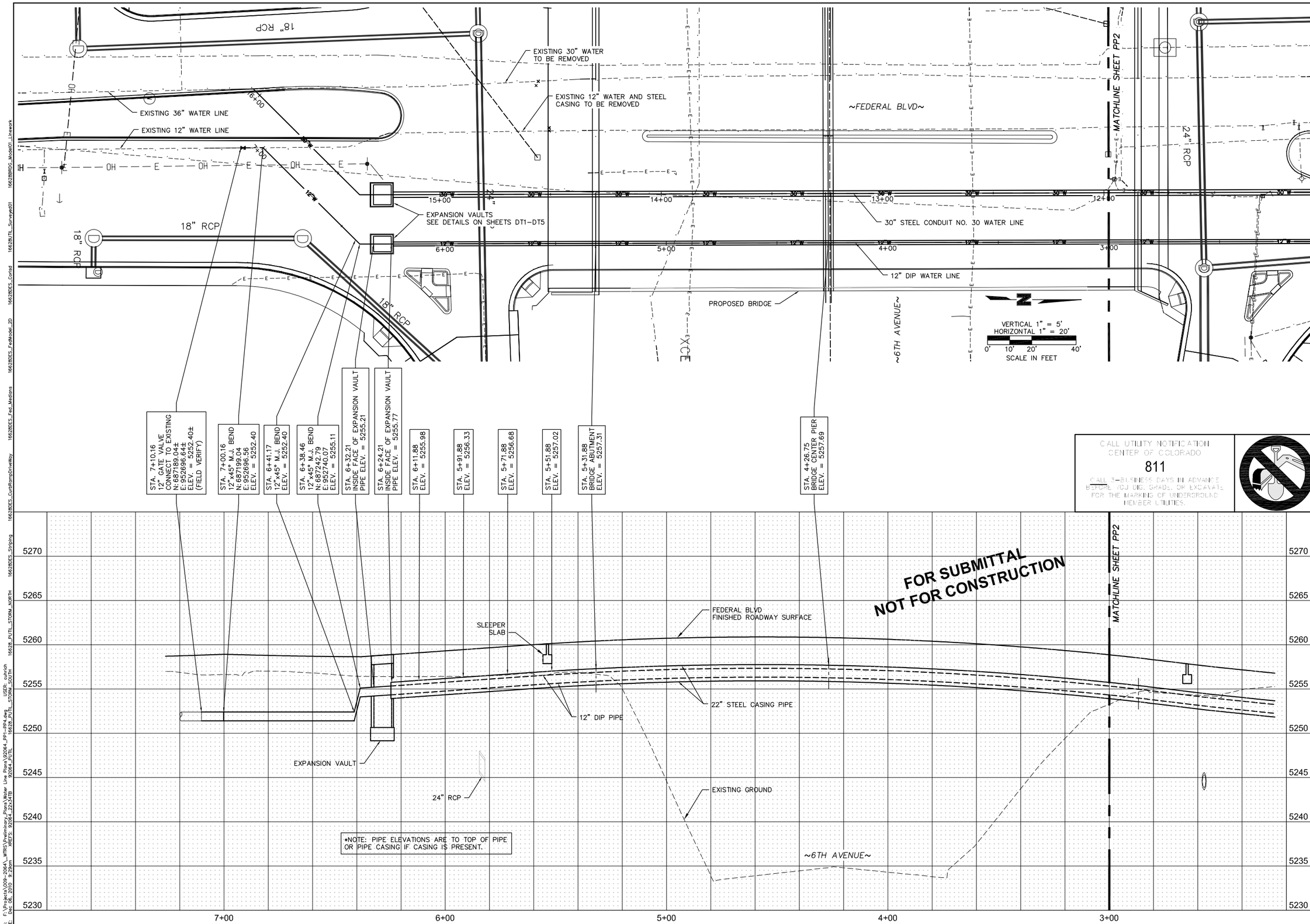

OLSSON ASSOCIATES
143 Union Boulevard, Suite 700
Lakewood, CO 80228-1825
TEL 720.962.6072
FAX 720.962.6195
www.oaconsulting.com

DENVER WATER

REV. NO.	DATE	REVISIONS DESCRIPTION

REVISIONS

12" WATER LINE RE-ALIGNMENT PLAN AND PROFILE STA. 7+26.36 TO 3+00

FEDERAL BOULEVARD/US 6 INTERCHANGE WATER LINE RE-ALIGNMENT

DENVER, COLORADO

2010

drawn by:	CU
checked by:	DK
approved by:	DK
QA/QC by:	DK
project no.:	009-2064
drawing no.:	5
date:	12.03.2010

PP1

5 of 17

DWG: F:\Projects\009-2064_WTRS\Preliminary_Plans\Water Line Plans\92064_PP1-PP4.dwg USER: culrich
DATE: Dec 06, 2010 9:29am XREFS: 92064_22x34TB 92064_PUTIL 16628_PUTIL_STORM_SOUTH 16628_PUTIL_STORM_NORTH 166280ES_Striping 166280ES_CurbRampDriveWay 166280ES_Fed_Medians 166280ES_FedModel_2D 166280ES_Curbid 166280TIL_Surveyed01 166280RDG_Model01_Linework

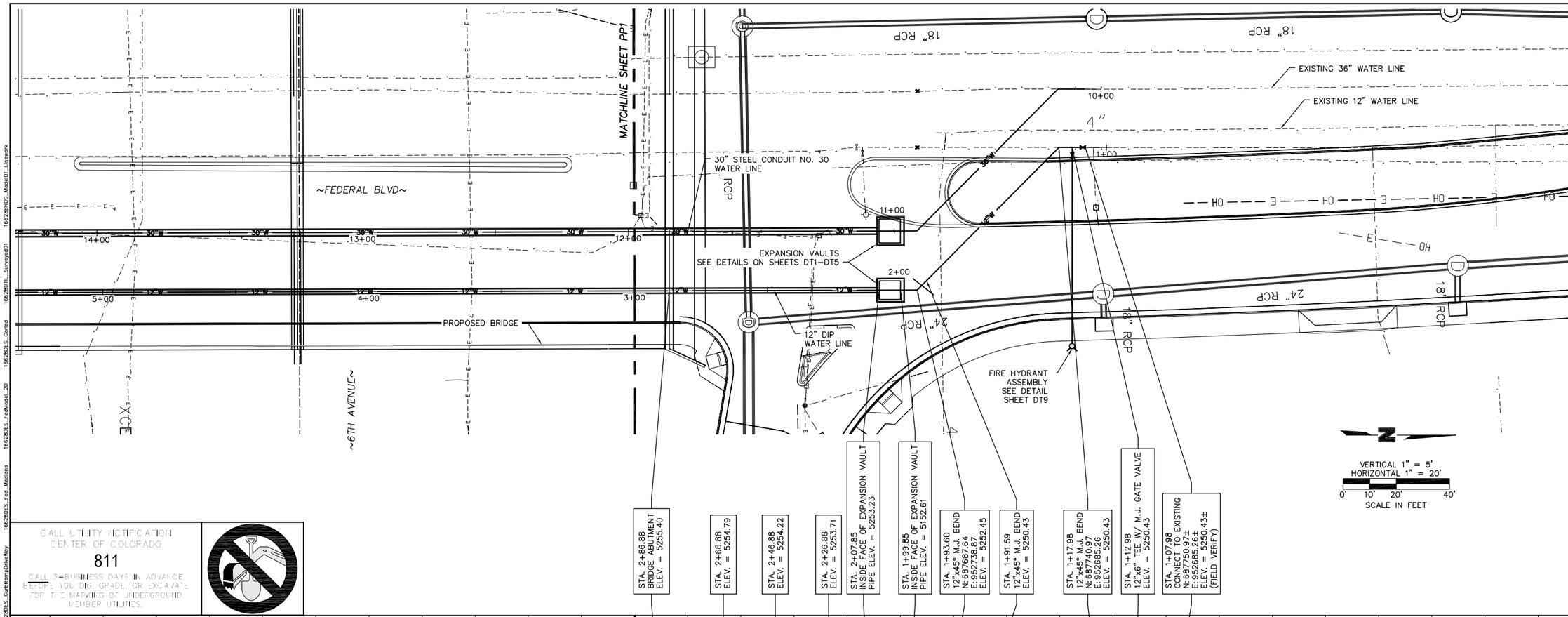

OLSSON ASSOCIATES
143 Union Boulevard, Suite 700
Lakewood, CO 80228-1825
TEL 720.962.6072
FAX 720.962.6195
www.oaconsulting.com

DENVER WATER

REV. NO.	DATE	REVISIONS DESCRIPTION

REVISIONS

12" WATER LINE RE-ALIGNMENT PLAN AND PROFILE STA. 3+00 TO 1+00

FEDERAL BOULEVARD/US 6 INTERCHANGE WATER LINE RE-ALIGNMENT

DENVER, COLORADO

2010

drawn by:	CU
checked by:	DK
approved by:	DK
QA/QC by:	DK
project no.:	009-2064
drawing no.:	6
date:	12.03.2010

PP2

DWG: F:\Projects\009-2064_WTRS\Preliminary_Plans\Water Line Plans\92064_PP1-PP4.dwg USER: cuhrich
DATE: Dec 06, 2010 9:12am XREFS: 92064_22x34TB 92064_PUTIL 16628_PUTIL_STORM_SOUTH 16628_PUTIL_STORM_NORTH 16628DES_Striping 16628DES_CurbRampDriveway 16628DES_Fed_Medians 16628DES_FedModel_2D 16628DES_Cartsd 16628UTIL_Surveyed01 16628BRDG_Model01_Linework

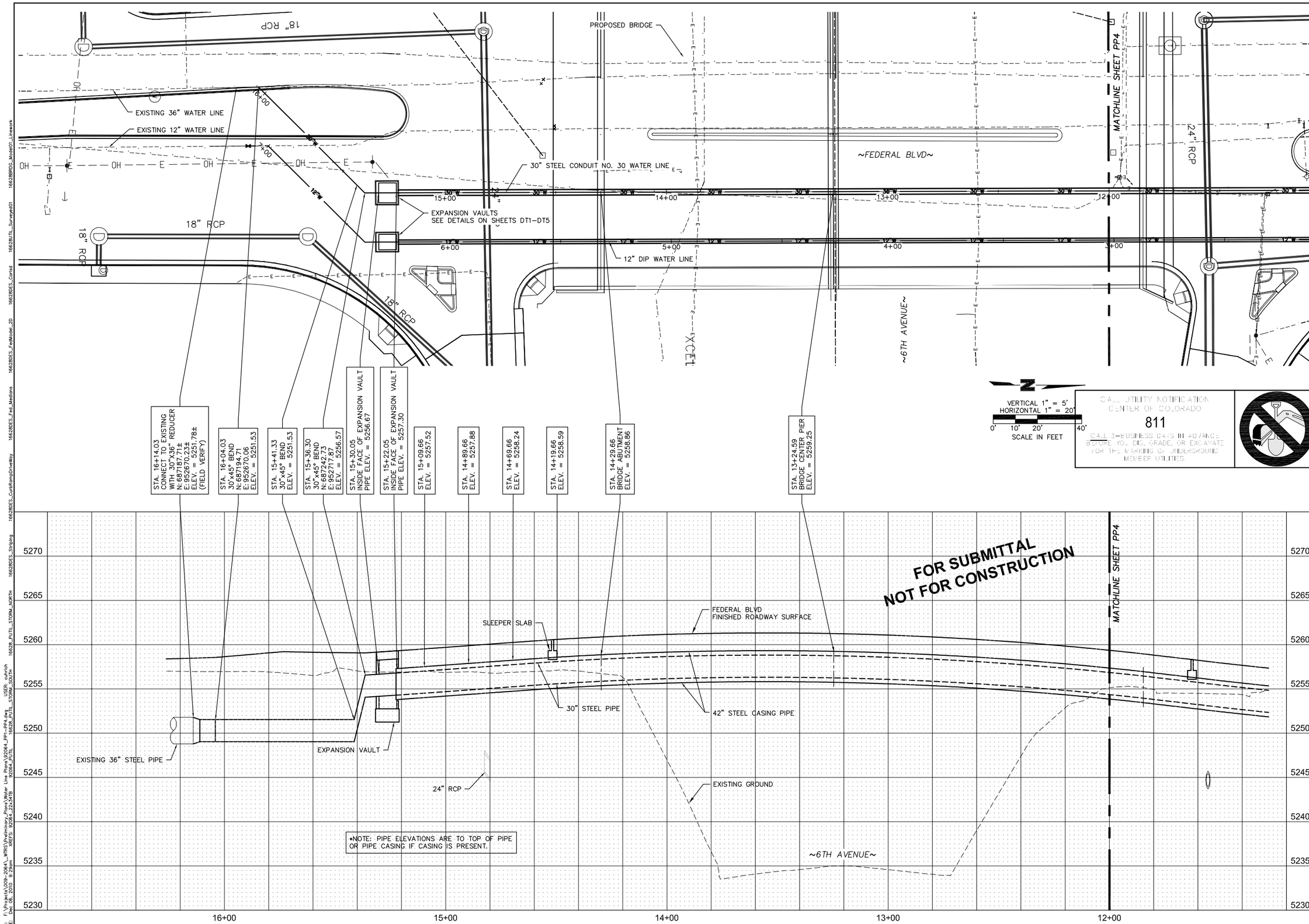

OLSSON ASSOCIATES
143 Union Boulevard, Suite 700
Lakewood, CO 80228-1825
TEL 720.962.6072
FAX 720.962.6195
www.oaconsulting.com

DENVER WATER

REV. NO.	DATE	REVISIONS DESCRIPTION

REVISIONS

30" WATER LINE RE-ALIGNMENT PLAN AND PROFILE STA. 16+26.23 TO 12+00

FEDERAL BOULEVARD/US 6 INTERCHANGE
WATER LINE RE-ALIGNMENT

DENVER, COLORADO

2010

drawn by: CU
checked by: DK
approved by: DK
QA/QC by: DK
project no.: 009-2064
drawing no.: 7
date: 12.03.2010

PP3
7 of 17

DWG: F:\Projects\009-2064_WTRS\Preliminary_Plans\Water Line Plans\92064_PP1-PP4.dwg USER: cahrich
DATE: Dec 06, 2010 9:29am XREFS: 92064_22x34TB 16628_PUTIL 92064_PUTIL 16628_PUTIL_STORM_SOUTH 16628_PUTIL_STORM_NORTH 16628ES_Striping 16628ES_CurbRampDriveWay 16628ES_Fed_Medians 16628ES_FedModel_2D 16628ES_Contsd 16628UTIL_Surveyed01 16628BRDG_Model01_Linework

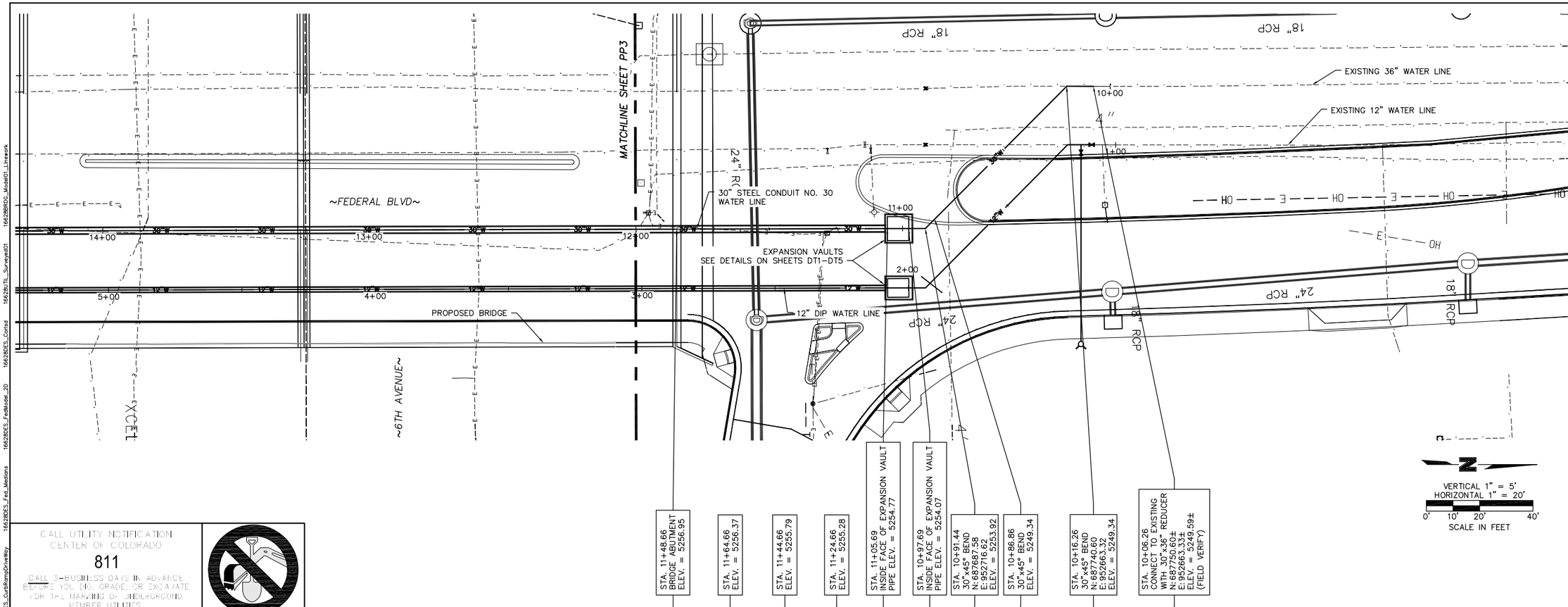

FOR SUBMITTAL
NOT FOR CONSTRUCTION

OLSSON ASSOCIATES
143 Union Boulevard, Suite 700
Lakewood, CO 80228-1825
TEL 720.962.6072
FAX 720.962.6195
www.oalconsulting.com

DENVER WATER

REV. NO.	DATE	REVISIONS DESCRIPTION

REVISIONS

36" WATER LINE RE-ALIGNMENT PLAN AND PROFILE STA. 12+00 TO 10+00

FEDERAL BOULEVARD/US 6 INTERCHANGE
WATER LINE RE-ALIGNMENT

DENVER, COLORADO

2010

drawn by: CU
checked by: DK
approved by: DK
QA/QC by: DK
project no.: 009-2064
drawing no.: 8
date: 12.03.2010

PP4

DWG: F:\Projects\009-2064_WTRS\Preliminary_Plans\Water Line Plans\92064_PP1-PP4.dwg USER: cahrich
DATE: Dec 06, 2010 9:13am XREFS: 92064_22x34TB 92064_PUTIL 16628_PUTIL_STORM_SOUTH 16628_PUTIL_STORM_NORTH 166280ES_Striping 166280ES_CurbRampDriveWay 166280ES_Fed_Medians 166280ES_FedMode_2D 166280ES_Cortlad 166280TIL_Surveyed01 166280DG_Model01_Linework

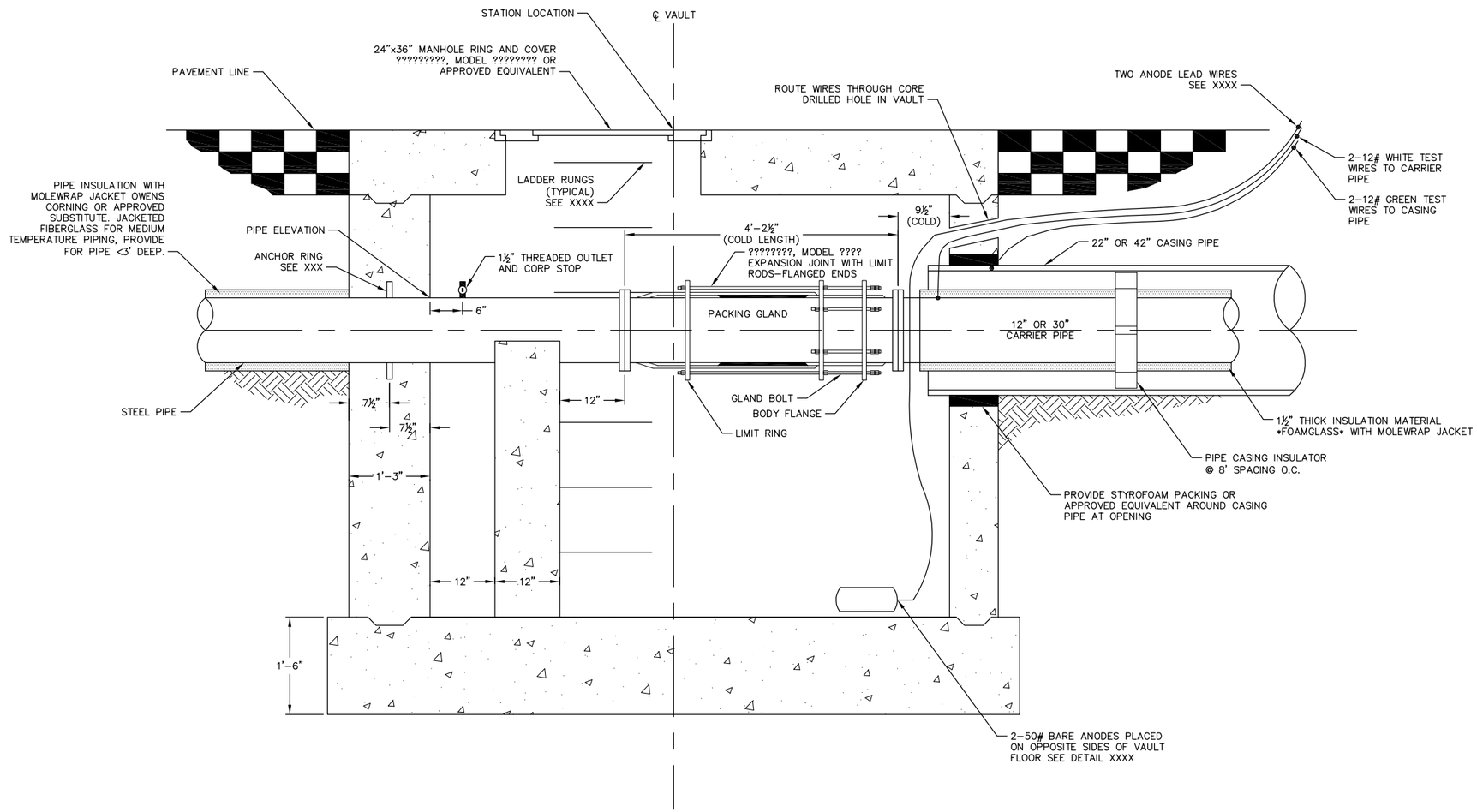

1 DT1 EXPANSION JOINT VAULT
Scale:1"=1'

CALL UTILITY NOTIFICATION
CENTER OF COLORADO
811
CALL 3-BUSINESS DAYS IN ADVANCE
BEFORE YOU DIG, GRADE, OR EXCAVATE
FOR THE MARKING OF UNDERGROUND
MEMBER UTILITIES.

OLSSON ASSOCIATES
143 Union Boulevard, Suite 700
Lakewood, CO 80228-1825
TEL 720.962.6072
FAX 720.962.6195
www.oscconsulting.com

DENVER WATER

REV. NO.	DATE	REVISIONS DESCRIPTION

REVISIONS

FEDERAL BOULEVARD WATER LINE RE-ALIGNMENT
TYPICAL EXPANSION JOINT VAULT DETAIL

FEDERAL BOULEVARD/US 6 INTERCHANGE
WATER LINE RE-ALIGNMENT

DENVER, COLORADO

2010

drawn by:	CU
checked by:	DK
approved by:	DK
QA/QC by:	DK
project no.:	009-2064
drawing no.:	9
date:	12.03.2010

DT1

DWG: F:\Projects\009-2064_WTRS\Preliminary_Plans\Water Line Plans\92064_DT1-DT5.dwg USER: cuhrich
DATE: Dec 03, 2010 12:55pm XREFS: 92064_22x34TB

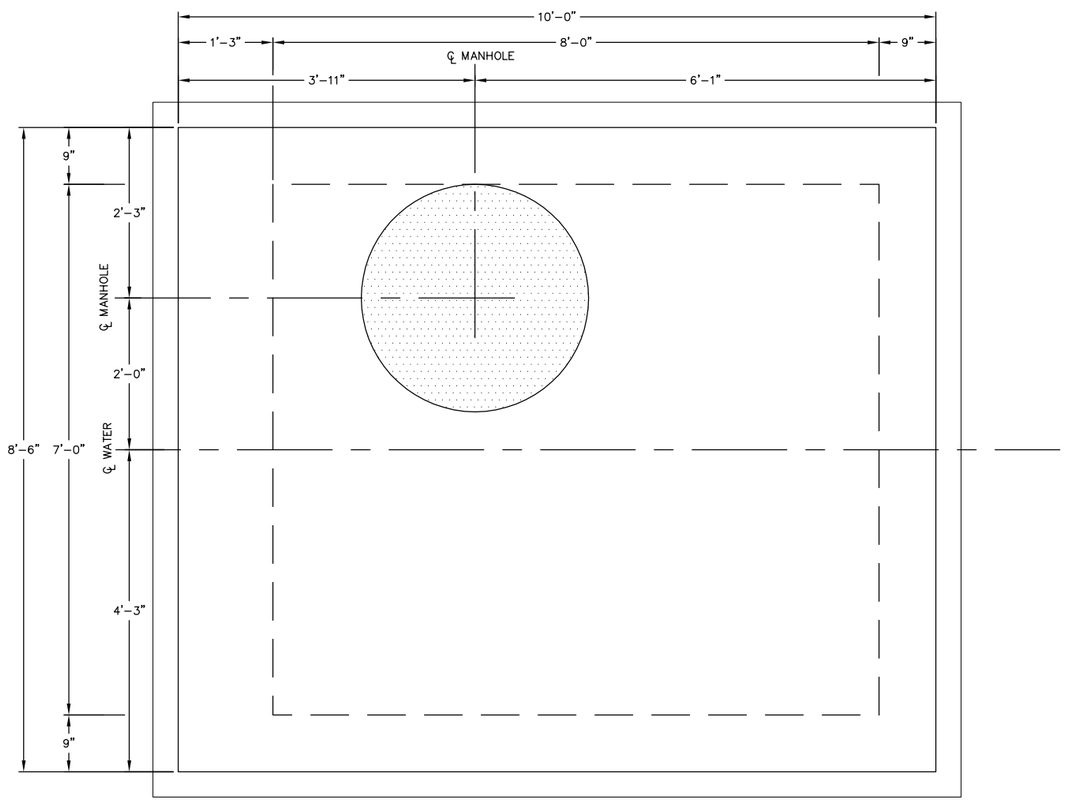

1 DT2 12" EXPANSION JOINT VAULT ROOF SLAB PLAN
Scale:1"=1'

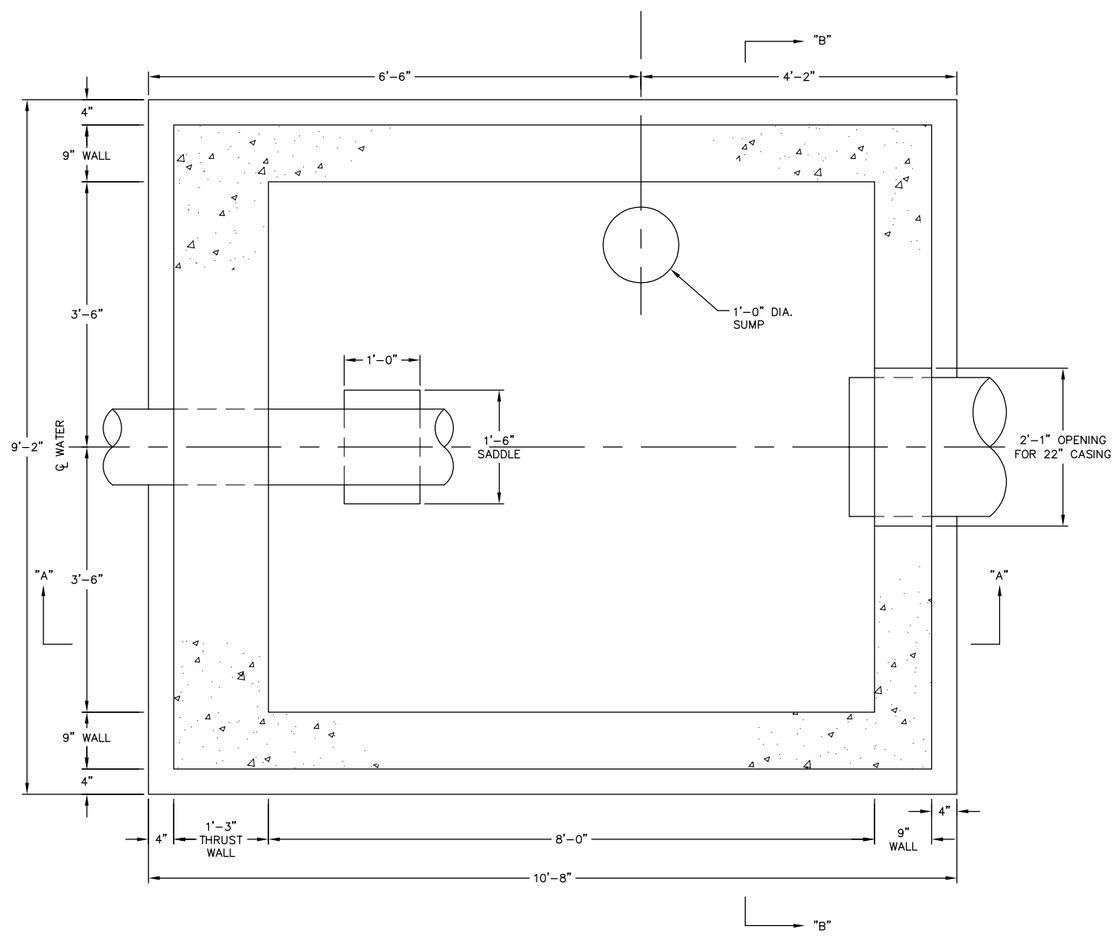

2 DT2 12" EXPANSION JOINT VAULT PLAN
Scale:1"=1'

NOTES:

1. CONCRETE SHALL BE DENVER WATER CLASS A CONCRETE CONFORMING TO DENVER WATER MATERIAL SPECIFICATION 18.
   f'c = 4,000 psi
   TYPE II CEMENT
   FLY ASH SUBSTITUTION
2. REINFORCING STEEL SHALL CONFORM TO DENVER WATER MATERIAL SPECIFICATION 20. REINFORCING STEEL WITHIN ROOF SLAB, AND DOWELS EXTENDING FROM WALLS INTO ROOF SLAB, SHALL BE EPOXY COATED. REINFORCING STEEL WHOLELY WITHIN WALLS OR FLOOR SLAB MAY BE NON-EPOXY COATED OR EPOXY COATED.
3. VAULTS SHALL BE CAST-IN-PLACE REINFORCED CONCRETE. PRECAST CONCRETE VAULTS ARE NOT PERMITTED DUE TO THE NEED TO CAST THE THRUST WALL AROUND THE IN-PLACE WATER LINE AND ANCHOR RING.
4. REINFORCING STEEL REQUIRES 1.5" CONCRETE COVER TO WATER CARRIER PIPE, ANCHOR RING, AND CASING PIPE OPENING. NO DIRECT CONTACT ALLOWED.

CALL UTILITY NOTIFICATION
CENTER OF COLORADO
811
CALL 3-BUSINESS DAYS IN ADVANCE
BEFORE YOU DIG, GRADE, OR EXCAVATE
FOR THE MARKING OF UNDERGROUND
MEMBER UTILITIES.

OLSSON ASSOCIATES
143 Union Boulevard, Suite 700
Lakewood, CO 80228-1825
TEL 720.962.6072
FAX 720.962.6195
www.oaconsulting.com

DENVER WATER

REV. NO.	DATE	REVISIONS DESCRIPTION

REVISIONS

FEDERAL BOULEVARD 12" WATER LINE
RE-ALIGNMENT EXPANSION JOINT VAULT PLAN

FEDERAL BOULEVARD/US 6 INTERCHANGE
WATER LINE RE-ALIGNMENT

DENVER, COLORADO

2010

drawn by:	CU
checked by:	DK
approved by:	DK
QA/QC by:	DK
project no.:	009-2064
drawing no.:	10
date:	12.03.2010

DT2

DWG: F:\Projects\009-2064_WTRS\Preliminary_Plans\Water Line Plans\92064_DT1-DT5.dwg USER: cuhrich
DATE: Dec 03, 2010 12:56pm XREFS: 92064_22x34TB

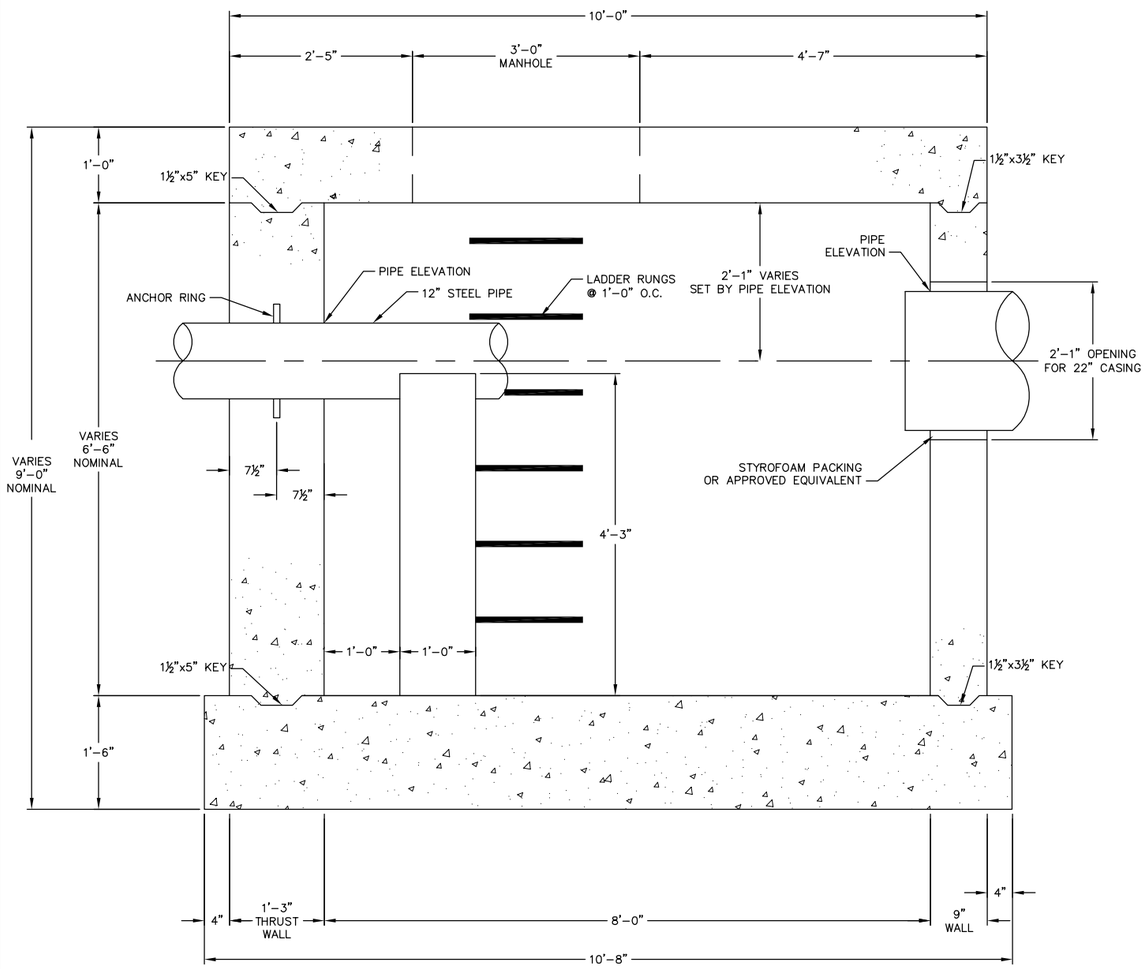

1 DT3 12" EXPANSION JOINT VAULT SECTION "A"
Scale:1"=1'

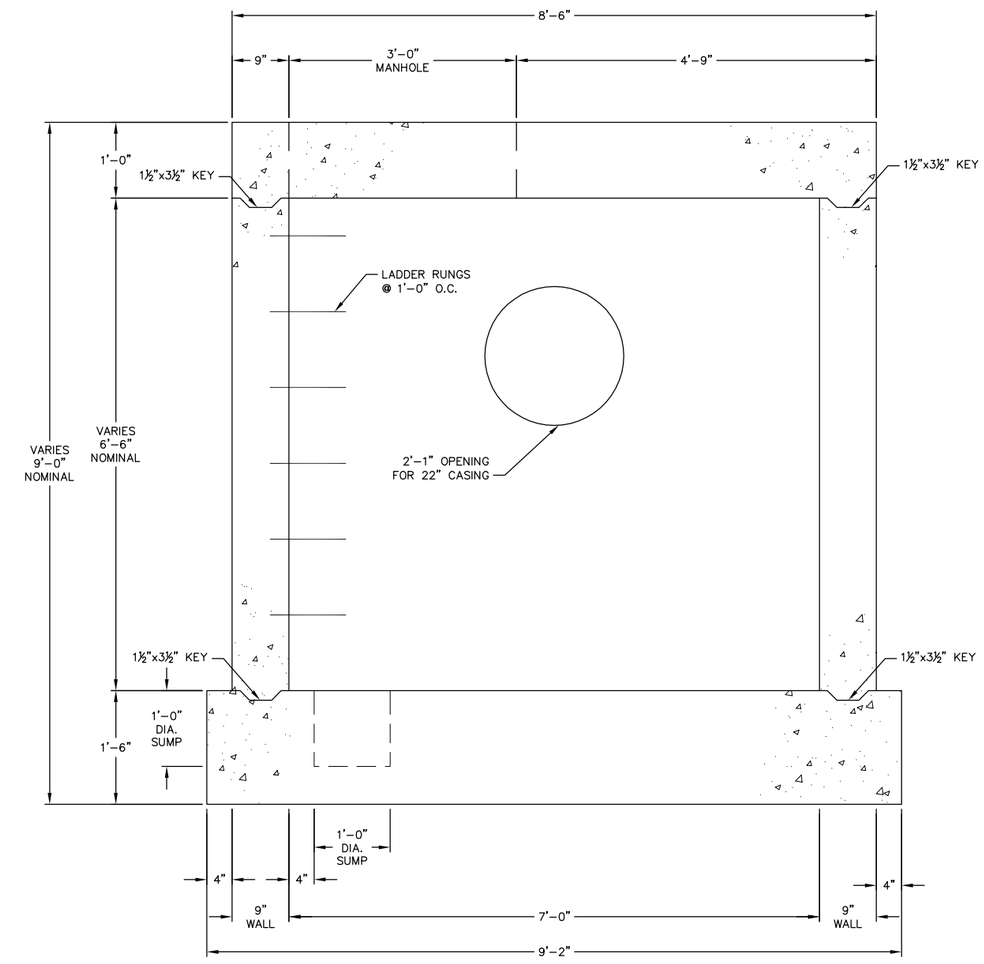

2 DT3 12" EXPANSION JOINT VAULT SECTION "B"
Scale:1"=1'

NOTES:

1. CONCRETE SHALL BE DENVER WATER CLASS A CONCRETE CONFORMING TO DENVER WATER MATERIAL SPECIFICATION 18.
   f'c = 4,000 psi
   TYPE II CEMENT
   FLY ASH SUBSTITUTION
2. REINFORCING STEEL SHALL CONFORM TO DENVER WATER MATERIAL SPECIFICATION 20. REINFORCING STEEL WITHIN ROOF SLAB, AND DOWELS EXTENDING FROM WALLS INTO ROOF SLAB, SHALL BE EPOXY COATED. REINFORCING STEEL WHOLELY WITHIN WALLS OR FLOOR SLAB MAY BE NON-EPOXY COATED OR EPOXY COATED.
3. VAULTS SHALL BE CAST-IN-PLACE REINFORCED CONCRETE. PRECAST CONCRETE VAULTS ARE NOT PERMITTED DUE TO THE NEED TO CAST THE THRUST WALL AROUND THE IN-PLACE WATER LINE AND ANCHOR RING.
4. REINFORCING STEEL REQUIRES 1.5" CONCRETE COVER TO WATER CARRIER PIPE, ANCHOR RING, AND CASING PIPE OPENING. NO DIRECT CONTACT ALLOWED.

WATER LINE AT FEDERAL BLVD	TOP OF ROOF SLAB ELEVATIONS			
	NORTHWEST CORNER	NORTHEAST CORNER	SOUTHEAST CORNER	SOUTHWEST CORNER
12" WATER LINE VAULT	XXXX.XX	XXXX.XX	XXXX.XX	XXXX.XX
30" WATER LINE VAULT	XXXX.XX	XXXX.XX	XXXX.XX	XXXX.XX

CALL UTILITY NOTIFICATION CENTER OF COLORADO
811
CALL 3-BUSINESS DAYS IN ADVANCE BEFORE YOU DIG, GRADE, OR EXCAVATE FOR THE MARKING OF UNDERGROUND MEMBER UTILITIES.

OLSSON ASSOCIATES
143 Union Boulevard, Suite 700
Lakewood, CO 80228-1825
TEL 720.962.6072
FAX 720.962.6195
www.oaconsulting.com

DENVER WATER

REV. NO.	DATE	REVISIONS DESCRIPTION

REVISIONS

FEDERAL BOULEVARD 12" WATER LINE RE-ALIGNMENT EXPANSION JOINT VAULT SECTIONS

FEDERAL BOULEVARD/US 6 INTERCHANGE WATER LINE RE-ALIGNMENT

DENVER, COLORADO

2010

drawn by: CU
checked by: DK
approved by: DK
QA/QC by: DK
project no.: 009-2064
drawing no.: 11
date: 12.03.2010

DT3

DWG: F:\Projects\009-2064_WTRS\Preliminary_Plans\Water Line Plans\92064_DT1-DT5.dwg USER: cuhrich
DATE: Dec 03, 2010 12:56pm XREFS: 92064_22x34TB

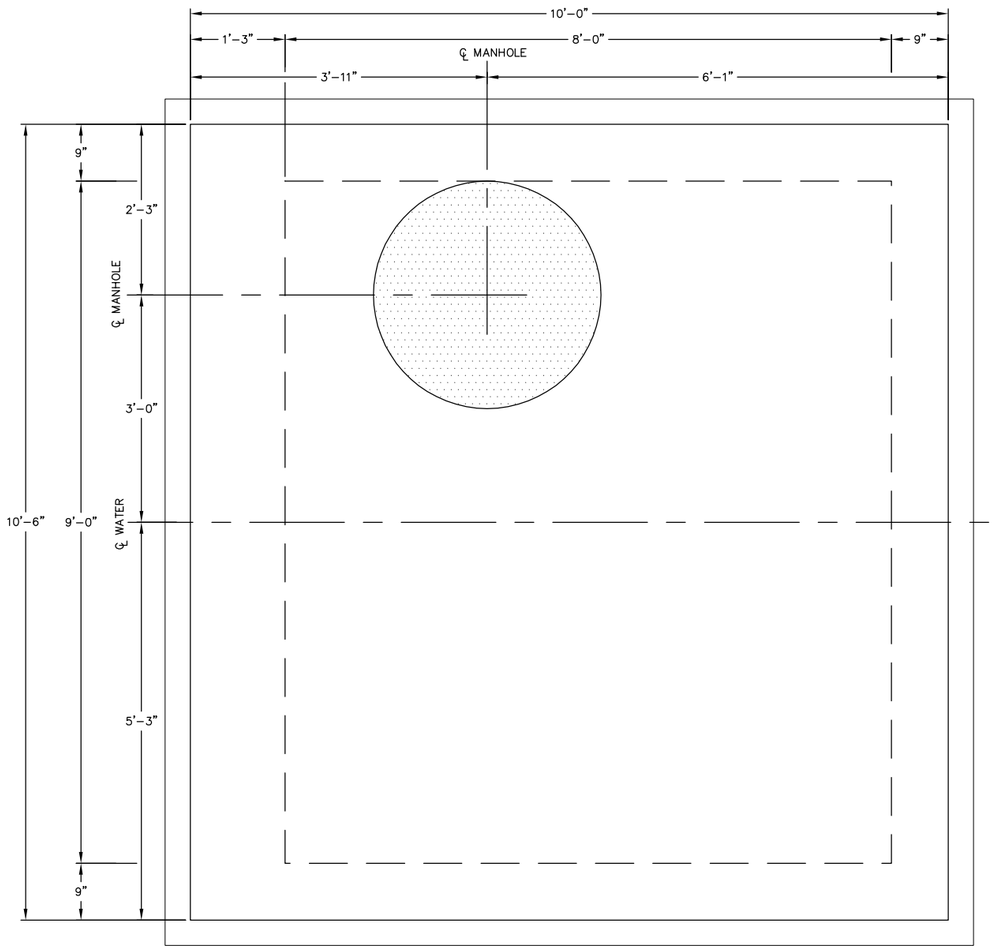

1 DT4 30" EXPANSION JOINT VAULT ROOF SLAB PLAN
Scale: 1"=1'

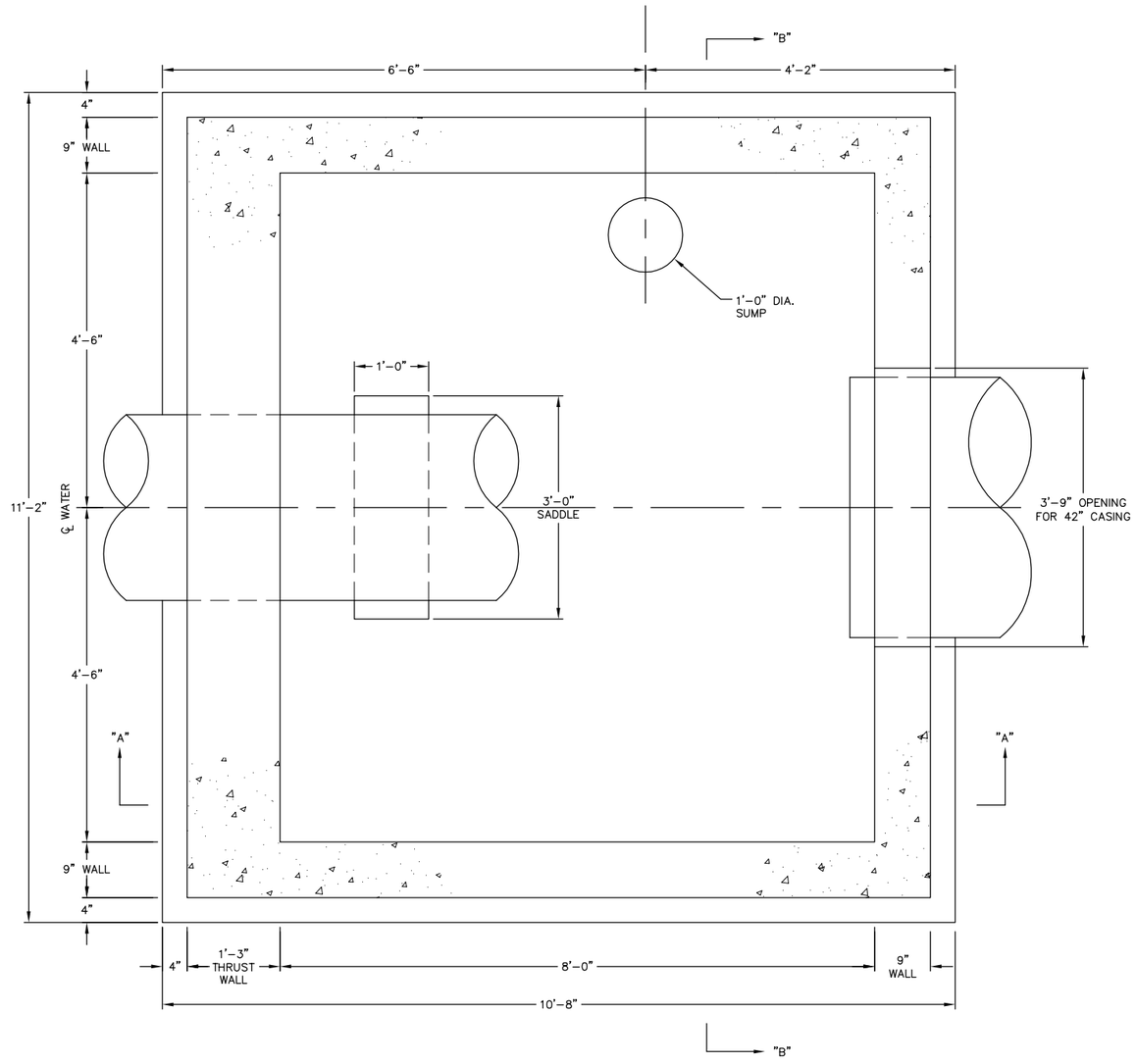

2 DT4 30" EXPANSION JOINT VAULT PLAN
Scale: 1"=1'

NOTES:

1. CONCRETE SHALL BE DENVER WATER CLASS A CONCRETE CONFORMING TO DENVER WATER MATERIAL SPECIFICATION 18.
   f'c = 4,000 psi
   TYPE II CEMENT
   FLY ASH SUBSTITUTION

2. REINFORCING STEEL SHALL CONFORM TO DENVER WATER MATERIAL SPECIFICATION 20. REINFORCING STEEL WITHIN ROOF SLAB, AND DOWELS EXTENDING FROM WALLS INTO ROOF SLAB, SHALL BE EPOXY COATED. REINFORCING STEEL WHOLELY WITHIN WALLS OR FLOOR SLAB MAY BE NON-EPOXY COATED OR EPOXY COATED.

3. VAULTS SHALL BE CAST-IN-PLACE REINFORCED CONCRETE. PRECAST CONCRETE VAULTS ARE NOT PERMITTED DUE TO THE NEED TO CAST THE THRUST WALL AROUND THE IN-PLACE WATER LINE AND ANCHOR RING.

4. REINFORCING STEEL REQUIRES 1.5" CONCRETE COVER TO WATER CARRIER PIPE, ANCHOR RING, AND CASING PIPE OPENING. NO DIRECT CONTACT ALLOWED.

CALL UTILITY NOTIFICATION CENTER OF COLORADO
811
CALL 3-BUSINESS DAYS IN ADVANCE BEFORE YOU DIG, GRADE, OR EXCAVATE FOR THE MARKING OF UNDERGROUND MEMBER UTILITIES.

OLSSON ASSOCIATES
143 Union Boulevard, Suite 700
Lakewood, CO 80228-1825
TEL 720.962.6072
FAX 720.962.6195
www.oaconsulting.com

DENVER WATER

REV. NO.	DATE	REVISIONS DESCRIPTION

REVISIONS

FEDERAL BOULEVARD 30" WATER LINE
RE-ALIGNMENT EXPANSION JOINT VAULT PLAN

FEDERAL BOULEVARD/US 6 INTERCHANGE
WATER LINE RE-ALIGNMENT

DENVER, COLORADO

2010

drawn by:	CU
checked by:	DK
approved by:	DK
QA/QC by:	DK
project no.:	009-2064
drawing no.:	12
date:	12.03.2010

DT4

DWG: F:\Projects\009-2064_WTRS\Preliminary_Plans\Water Line Plans\92064_DT1-DT5.dwg USER: cuhrich
DATE: Dec 03, 2010 12:56pm XREFS: 92064_22x34TB

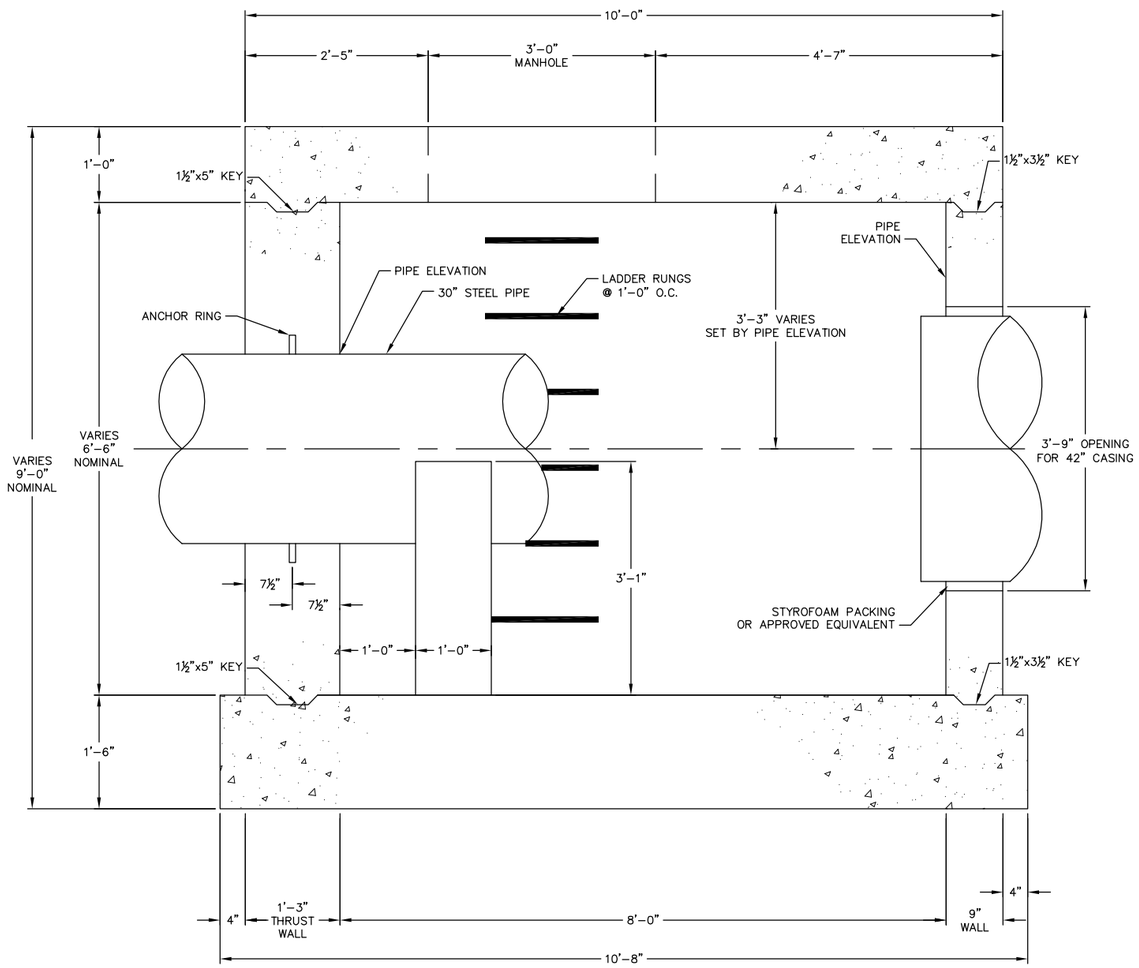

1 DT5 30" EXPANSION JOINT VAULT SECTION "A"
Scale:1"=1'

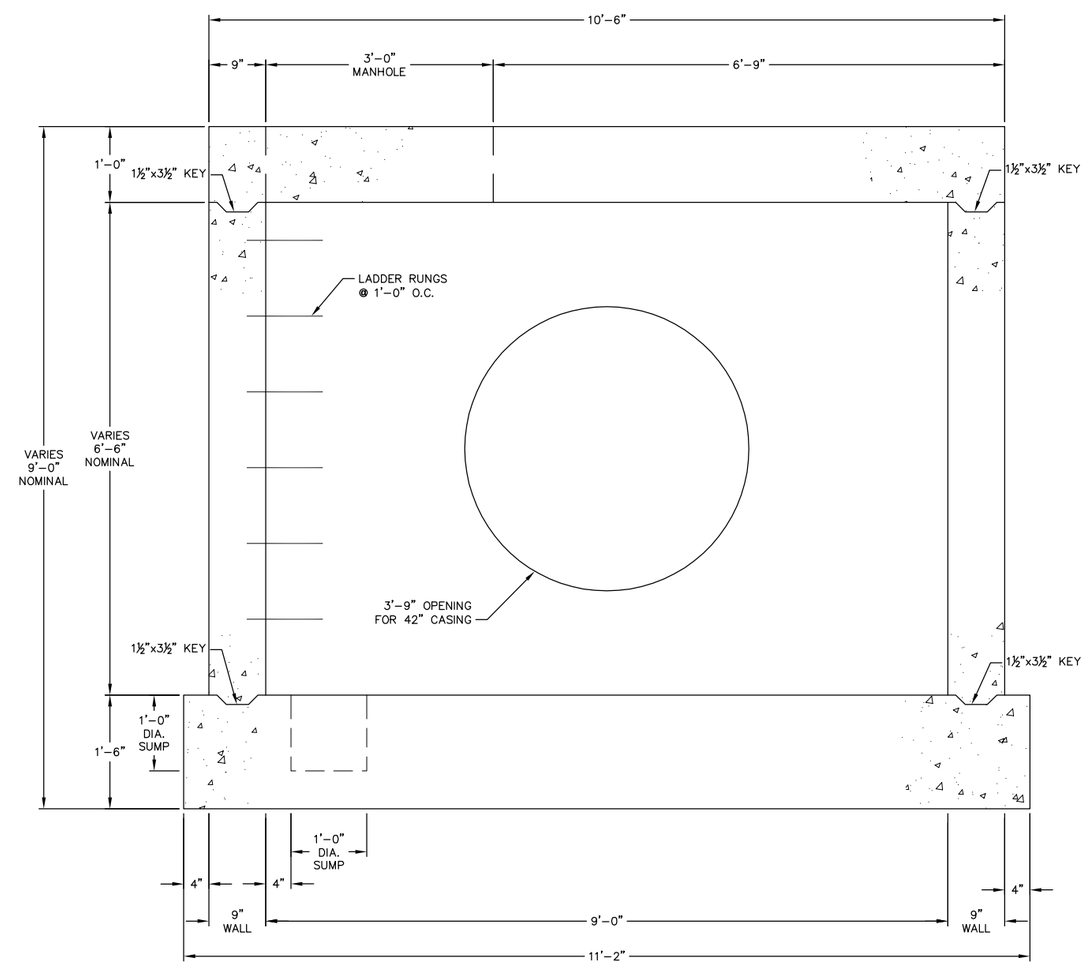

2 DT5 30" EXPANSION JOINT VAULT SECTION "B"
Scale:1"=1'

NOTES:

1. CONCRETE SHALL BE DENVER WATER CLASS A CONCRETE CONFORMING TO DENVER WATER MATERIAL SPECIFICATION 18.
   f'c = 4,000 psi
   TYPE II CEMENT
   FLY ASH SUBSTITUTION
2. REINFORCING STEEL SHALL CONFORM TO DENVER WATER MATERIAL SPECIFICATION 20. REINFORCING STEEL WITHIN ROOF SLAB, AND DOWELS EXTENDING FROM WALLS INTO ROOF SLAB, SHALL BE EPOXY COATED. REINFORCING STEEL WHOLELY WITHIN WALLS OR FLOOR SLAB MAY BE NON-EPOXY COATED OR EPOXY COATED.
3. VAULTS SHALL BE CAST-IN-PLACE REINFORCED CONCRETE. PRECAST CONCRETE VAULTS ARE NOT PERMITTED DUE TO THE NEED TO CAST THE THRUST WALL AROUND THE IN-PLACE WATER LINE AND ANCHOR RING.
4. REINFORCING STEEL REQUIRES 1.5" CONCRETE COVER TO WATER CARRIER PIPE, ANCHOR RING, AND CASING PIPE OPENING. NO DIRECT CONTACT ALLOWED.

WATER LINE AT FEDERAL BLVD	TOP OF ROOF SLAB ELEVATIONS			
	NORTHWEST CORNER	NORTHEAST CORNER	SOUTHEAST CORNER	SOUTHWEST CORNER
12" WATER LINE VAULT	XXXX.XX	XXXX.XX	XXXX.XX	XXXX.XX
36" WATER LINE VAULT	XXXX.XX	XXXX.XX	XXXX.XX	XXXX.XX

CALL UTILITY NOTIFICATION CENTER OF COLORADO
811
CALL 3-BUSINESS DAYS IN ADVANCE BEFORE YOU DIG, GRADE, OR EXCAVATE FOR THE MARKING OF UNDERGROUND MEMBER UTILITIES.

OLSSON ASSOCIATES
143 Union Boulevard, Suite 700
Lakewood, CO 80228-1825
TEL 720.962.6072
FAX 720.962.6195
www.oaconsulting.com

DENVER WATER

REV. NO.	DATE	REVISIONS DESCRIPTION

REVISIONS

FEDERAL BOULEVARD 30" WATER LINE RE-ALIGNMENT EXPANSION JOINT VAULT SECTIONS

FEDERAL BOULEVARD/US 6 INTERCHANGE WATER LINE RE-ALIGNMENT

DENVER, COLORADO

2010

drawn by: CU
checked by: DK
approved by: DK
QA/QC by: DK
project no.: 009-2064
drawing no.: 13
date: 12.03.2010

DT5

DWG: F:\Projects\009-2064_WTRS\Preliminary_Plans\Water Line Plans\92064_DT1-DT5.dwg USER: cuhrich
DATE: Dec 03, 2010 12:57pm XREFS: 92064_22x34TB

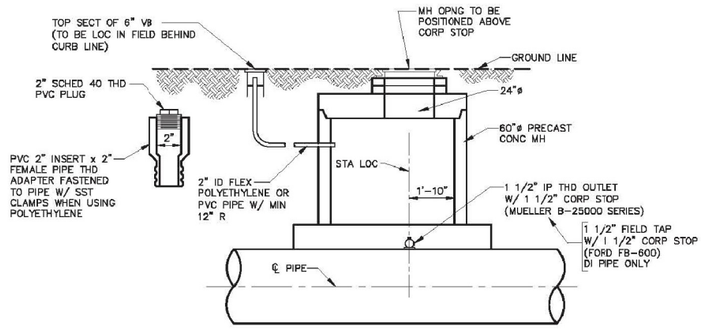

ELEVATION

NOTES:

1. THE PURPOSE OF THIS INSTALLATION IS TO ALLOW FOR RECORDING THE FLOWS IN THE PIPE OVER A PERIOD OF TIME WITH A DEVICE CALLED A PITOT TUBE, WHICH IS INSERTED INTO THE PIPE THROUGH THE CORPORATION STOP.
2. THE DISTANCE BETWEEN RUNGS, CLEATS, AND STEPS SHALL NOT EXCEED 12 INCHES AND SHALL BE UNIFORM THROUGHOUT THE LENGTH OF THE LADDER.

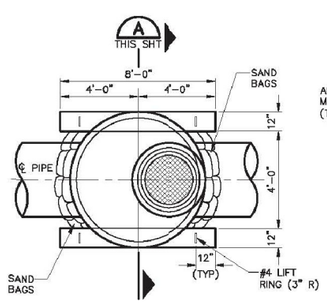

PLAN

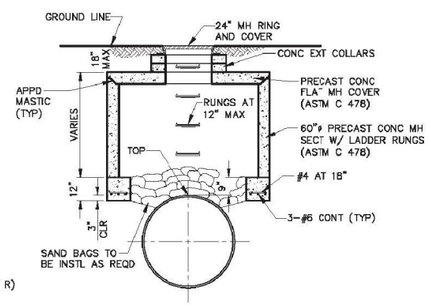

SECTION A THIS SHT

TYPICAL CONC MH INSTALLATION

DENVER WATER
1600 West 12th Avenue•Denver, Colorado 80204
Phone(303)628-6000•Telecopier No.(303)628-6851

PITOT INSTALLATION & TYPICAL CONC MH INSTALLATION

Scale: NONE	Date: June 2010
Drawn: C.A.M.	Ck: K ROSS
Approved:	Dr. 127 No. 35

Effective Date: September 2010

SHEET 20

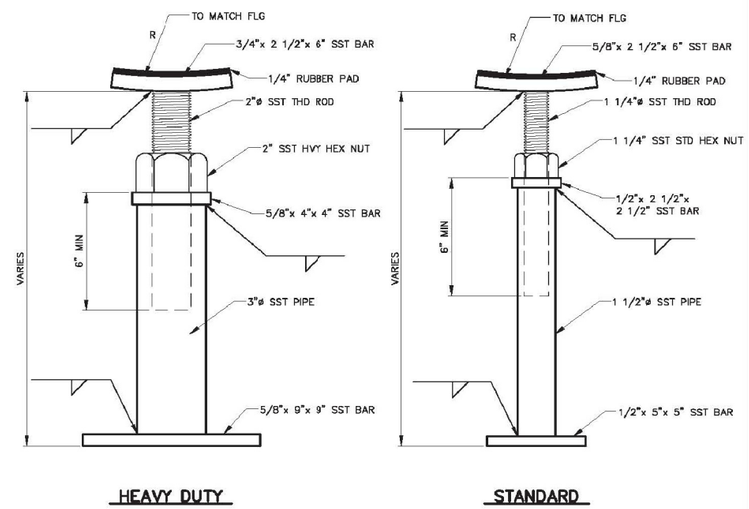

HEAVY DUTY

STANDARD

ADJUSTABLE – SUPPORT

DENVER WATER
1600 West 12th Avenue•Denver, Colorado 80204
Phone(303)628-6000•Telecopier No.(303)628-6851

ADJUSTABLE STEEL PIPE VALVE SUPPORT

Scale: NONE	Date: June 2010
Drawn: C.A.M.	Ck: K ROSS
Approved:	Dr. 127 No. 35

Effective Date: September 2010

SHEET 39

CALL UTILITY NOTIFICATION CENTER OF COLORADO
811
CALL 3-BUSINESS DAYS IN ADVANCE BEFORE YOU DIG, GRADE, OR EXCAVATE FOR THE MARKING OF UNDERGROUND MEMBER UTILITIES

OLSSON ASSOCIATES
143 Union Boulevard, Suite 700
Lakewood, CO 80228-1825
TEL 720.962.6072
FAX 720.962.6195
www.oscconsulting.com

DENVER WATER

REV. NO.	DATE	REVISIONS DESCRIPTION

REVISIONS

DENVER WATER TYPICAL DETAILS

FEDERAL BOULEVARD/US 6 INTERCHANGE WATER LINE RE-ALIGNMENT

DENVER, COLORADO

2010

drawn by:	CU
checked by:	DK
approved by:	DK
QA/QC by:	DK
project no.:	009-2064
drawing no.:	14
date:	12.03.2010

DT6

DWG: F:\Projects\009-2064_WTRS\Preliminary_Plans\Water Line Plans\92064_DT6-DT7.dwg USER: cuhrich
DATE: Dec 03, 2010 12:57pm XREFS: 92064_22x34TB

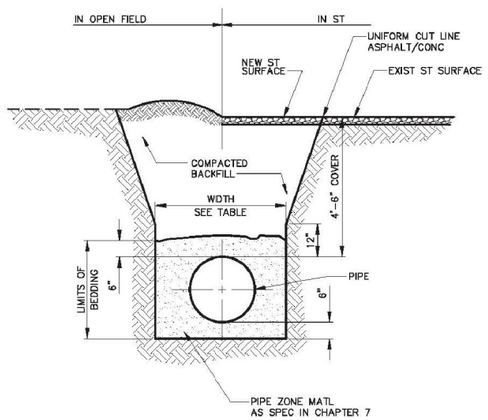

TYPICAL TRENCH SECTION

NOTES:

1. NEW STREET SURFACE SHALL COMPLY WITH LOCAL AUTHORITY JURISDICTION.
2. TRENCH WALLS TO BE SUPPORTED AS REQUIRED BY OSHA.
3. MINIMUM COVER TO BE BELOW OFFICIAL STREET GRADE.

PIPE ø	MIN WIDTH	MAX WIDTH
4"	1'-4"	2'-4"
6"	1'-6"	2'-6"
8"	1'-8"	2'-8"
12"	2'-0"	3'-0"
16"	2'-4"	3'-4"
20"	2'-8"	3'-8"
24"	4'-0"	5'-0"

DENVER WATER
1600 West 12th Avenue•Denver, Colorado 80204
Phone(303)628-6000•Telecopier No.(303)628-6851

TYPICAL TRENCH SECTION
PIPE PROTECTION

Scale: NONE | Date: June 2010
Drawn: C.B.B. | Ck: K ROSS
Approved: | Dr. 127 No. 35

Effective Date: September 2010

SHEET 11

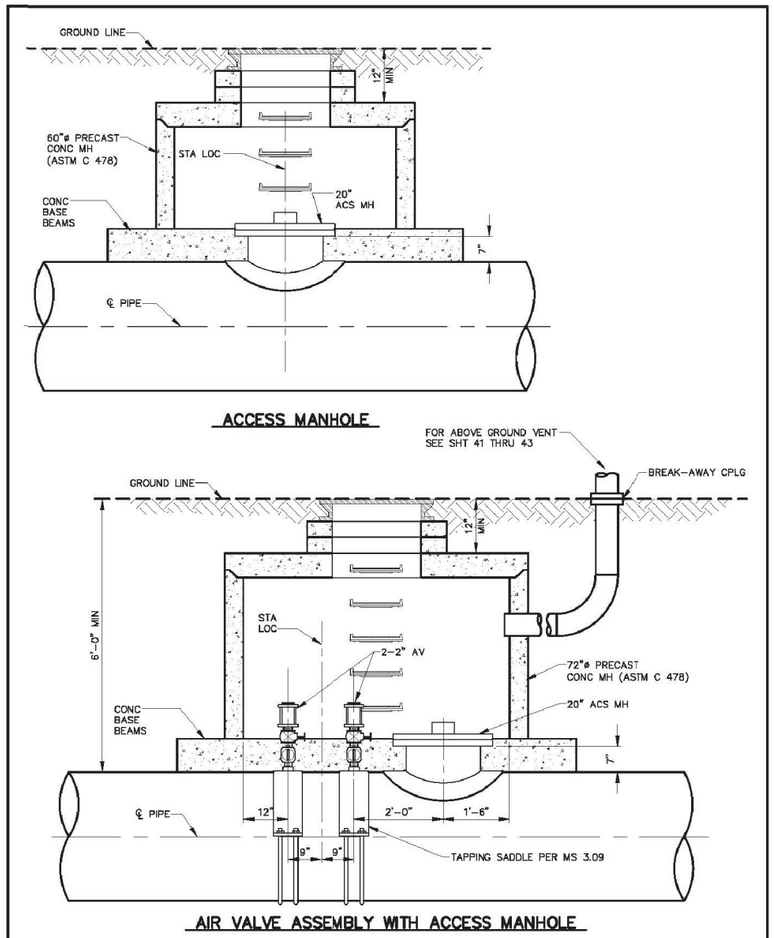

ACCESS MANHOLE

AIR VALVE ASSEMBLY WITH ACCESS MANHOLE

NOTES:

1. USE 2" AV ASSY FOR 36" OR SMALLER PIPE.
2. SEE SHT 22 FOR CONCRETE MANHOLE BASE BEAMS AND AIR VALVE DETAIL.
3. LADDER RUNGS ARE REQUIRED IN PRECAST MANHOLE. THE DIST BETWEEN RUNGS, CLEATS, AND STEPS SHALL NOT EXCEED 12" INCHES AND SHALL BE UNIFORM THROUGHOUT THE LENGTH OF THE LADDER.
4. FOR MANHOLE INFORMATION SEE SHEET 20.

DENVER WATER
1600 West 12th Avenue•Denver, Colorado 80204
Phone(303)628-6000•Telecopier No.(303)628-6851

AIR VALVE ASSEMBLY WITH
ACCESS MANHOLE

Scale: NONE | Date: June 2010
Drawn: C.A.M. | Ck: K ROSS
Approved: | Dr. 127 No. 35

Effective Date: September 2010

SHEET 23

CALL UTILITY NOTIFICATION
CENTER OF COLORADO
811
CALL 3-BUSINESS DAYS IN ADVANCE
BEFORE YOU DIG, GRADE, OR EXCAVATE
FOR THE MARKING OF UNDERGROUND
MEMBER UTILITIES.

OLSSON ASSOCIATES
143 Union Boulevard, Suite 700
Lakewood, CO 80228-1825
TEL 720.962.6072
FAX 720.962.6195
www.oaconsulting.com

DENVER WATER

REV. NO.	DATE	REVISIONS DESCRIPTION

REVISIONS

DENVER WATER TYPICAL DETAILS

FEDERAL BOULEVARD/US 6 INTERCHANGE
WATER LINE RE-ALIGNMENT

DENVER, COLORADO

2010

drawn by: CU
checked by: DK
approved by: DK
QA/QC by: DK
project no.: 009-2064
drawing no.: 15
date: 12.03.2010

DT7

DWG: F:\Projects\009-2064_MTRS\Preliminary_Plans\Water Line Plans\92064_DT6-DT7.dwg USER: cuhrich
DATE: Dec 03, 2010 12:58pm XREFS: 92064_22x34TB

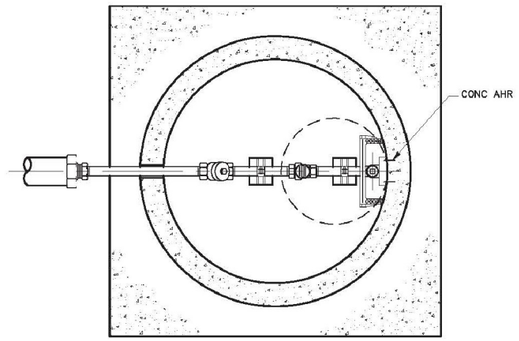

PLAN

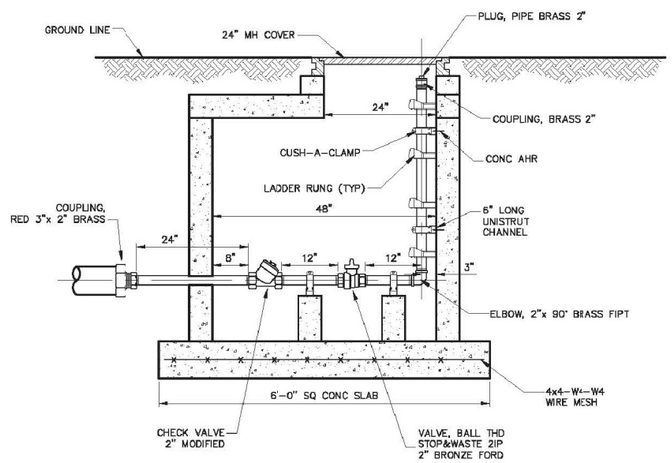

ELEVATION

DENVER WATER
1600 West 12th Avenue•Denver, Colorado 80204
Phone(303)628-6000•Telecopier No.(303)628-6851

STANDARD DESIGN FOR
2" BLOWOFF IN MANHOLE

Scale: NONE	Date: June 2010
Drawn: C.A.M.	Ck: K ROSS
Approved:	Dr. 127 No. 35

Effective Date: September 2010

SHEET 13

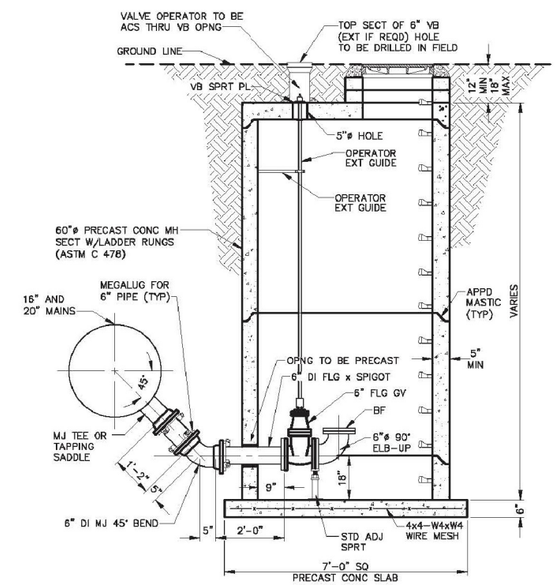

NOTE:
THIS INSTALLATION MAY BE REPLACED BY A FIRE HYDRANT WHERE APPROVED BY DENVER WATER FOR 16" AND 20" MAINS.

DENVER WATER
1600 West 12th Avenue•Denver, Colorado 80204
Phone(303)628-6000•Telecopier No.(303)628-6851

TRANSMISSION MAIN
BLOWOFF INSTALLATION

Scale: NONE	Date: June 2010
Drawn: C.A.M.	Ck: K ROSS
Approved:	Dr. 127 No. 35

Effective Date: September 2010

SHEET 21

CALL UTILITY NOTIFICATION CENTER OF COLORADO
811
CALL 3-BUSINESS DAYS IN ADVANCE BEFORE YOU DIG, GRADE, OR EXCAVATE FOR THE MARKING OF UNDERGROUND MEMBER UTILITIES.

OLSSON ASSOCIATES
143 Union Boulevard, Suite 700
Lakewood, CO 80228-1825
TEL 720.962.6072
FAX 720.962.6195
www.oscnsulting.com

DENVER WATER

REV. NO.	DATE	REVISIONS DESCRIPTION

REVISIONS

DENVER WATER TYPICAL DETAILS

FEDERAL BOULEVARD/US 6 INTERCHANGE
WATER LINE RE-ALIGNMENT

DENVER, COLORADO

2010

drawn by:	CU
checked by:	DK
approved by:	DK
QA/QC by:	DK
project no.:	009-2064
drawing no.:	16
date:	12.03.2010

DT8

DWG: F:\Projects\009-2064_WTRS\Preliminary_Plans\Water Line Plans\92064_DT6-DTX.dwg USER: cuhrich
DATE: Dec 03, 2010 12:58pm XREFS: 92064_22x34TB

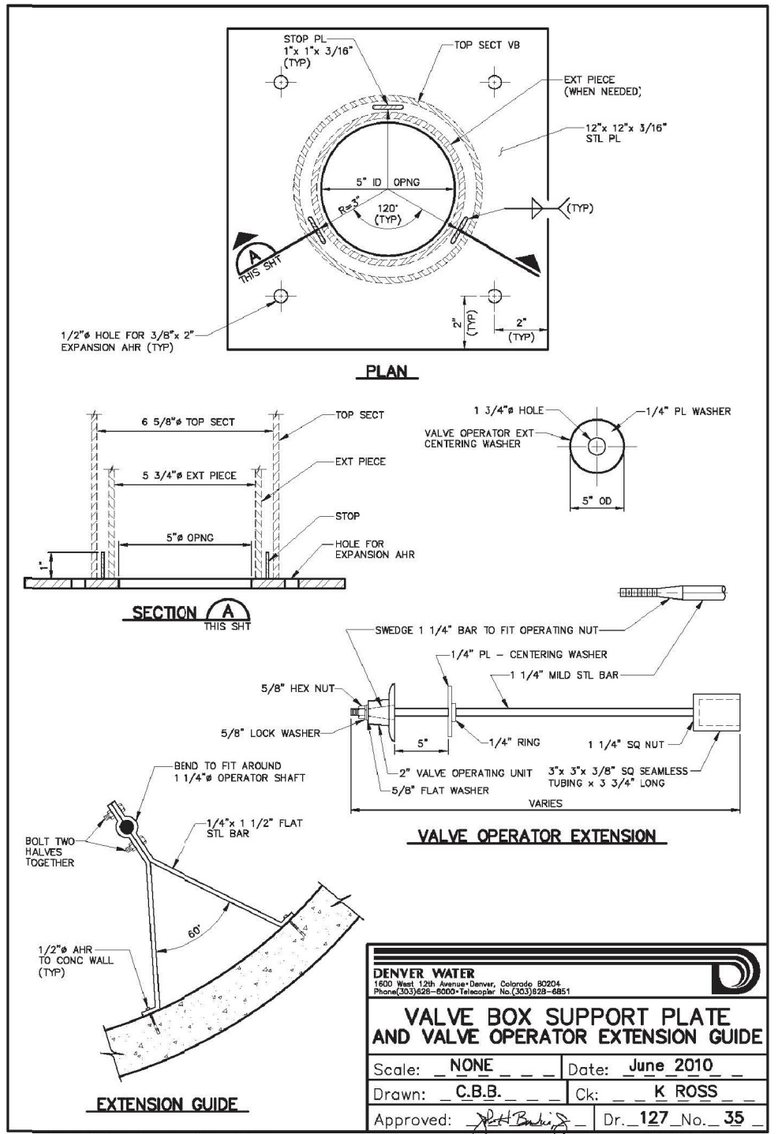

DENVER WATER
1600 West 12th Avenue•Denver, Colorado 80204
Phone(303)628-6000•Telecopier No.(303)628-6851

VALVE BOX SUPPORT PLATE AND VALVE OPERATOR EXTENSION GUIDE

Scale: NONE	Date: June 2010
Drawn: C.B.B.	Ck: K ROSS
Approved:	Dr. 127 No. 35

Effective Date: September 2010

SHEET 25

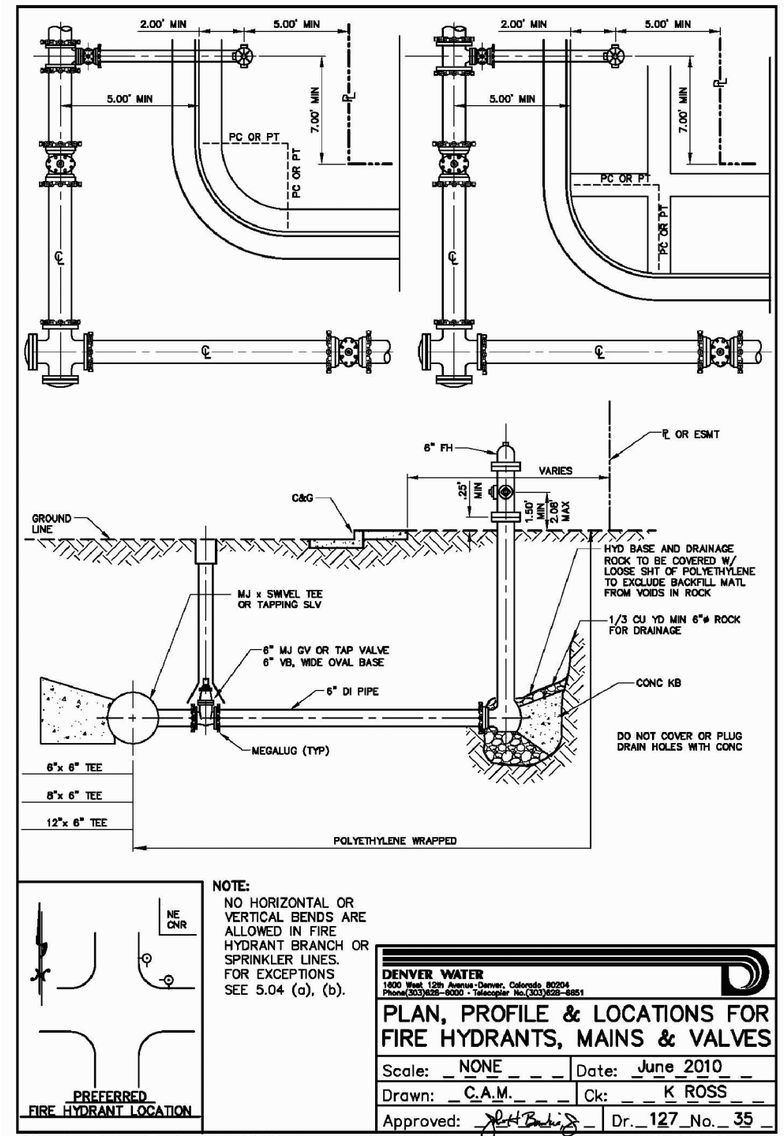

NOTE:
NO HORIZONTAL OR VERTICAL BENDS ARE ALLOWED IN FIRE HYDRANT BRANCH OR SPRINKLER LINES. FOR EXCEPTIONS SEE 5.04 (a), (b).

DENVER WATER
1600 West 12th Avenue•Denver, Colorado 80204
Phone(303)628-6000 • Telecopier No.(303)628-6851

PLAN, PROFILE & LOCATIONS FOR FIRE HYDRANTS, MAINS & VALVES

Scale: NONE	Date: June 2010
Drawn: C.A.M.	Ck: K ROSS
Approved:	Dr. 127 No. 35

Effective Date: September 2010

SHEET 50

CALL UTILITY NOTIFICATION
CENTER OF COLORADO
811
CALL 3-BUSINESS DAYS IN ADVANCE
BEFORE YOU DIG, GRADE, OR EXCAVATE
FOR THE MARKING OF UNDERGROUND
MEMBER UTILITIES.

OLSSON ASSOCIATES
143 Union Boulevard, Suite 700
Lakewood, CO 80228-1825
TEL 720.962.6072
FAX 720.962.6195
www.oscconsulting.com

DENVER WATER

REV. NO.	DATE	REVISIONS DESCRIPTION

REVISIONS

DENVER WATER TYPICAL DETAILS

FEDERAL BOULEVARD/US 6 INTERCHANGE
WATER LINE RE-ALIGNMENT

DENVER, COLORADO

2010

drawn by:	CU
checked by:	DK
approved by:	DK
QA/QC by:	DK
project no.:	009-2064
drawing no.:	17
date:	12.03.2010

DT9

DWG: F:\Projects\009-2064_WTRS\Preliminary_Plans\Water Line Plans\92064_DT6-DT7x.dwg USER: cuhrich
DATE: Dec 03, 2010 12:58pm XREFS: 92064_22x34TB