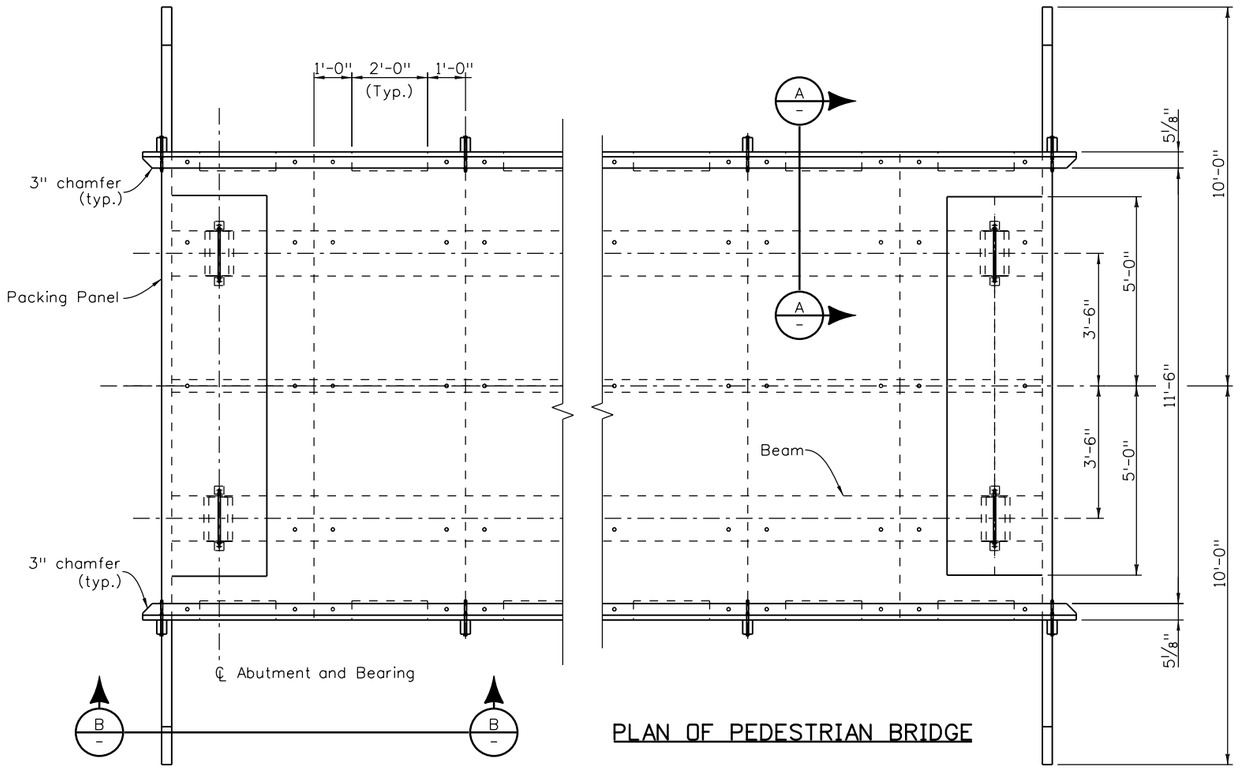

PLAN OF PEDESTRIAN BRIDGE

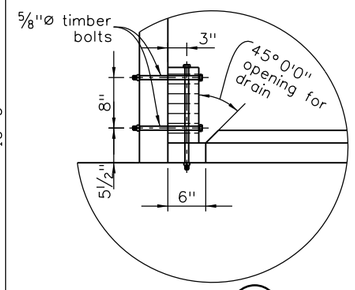

DETAIL 1

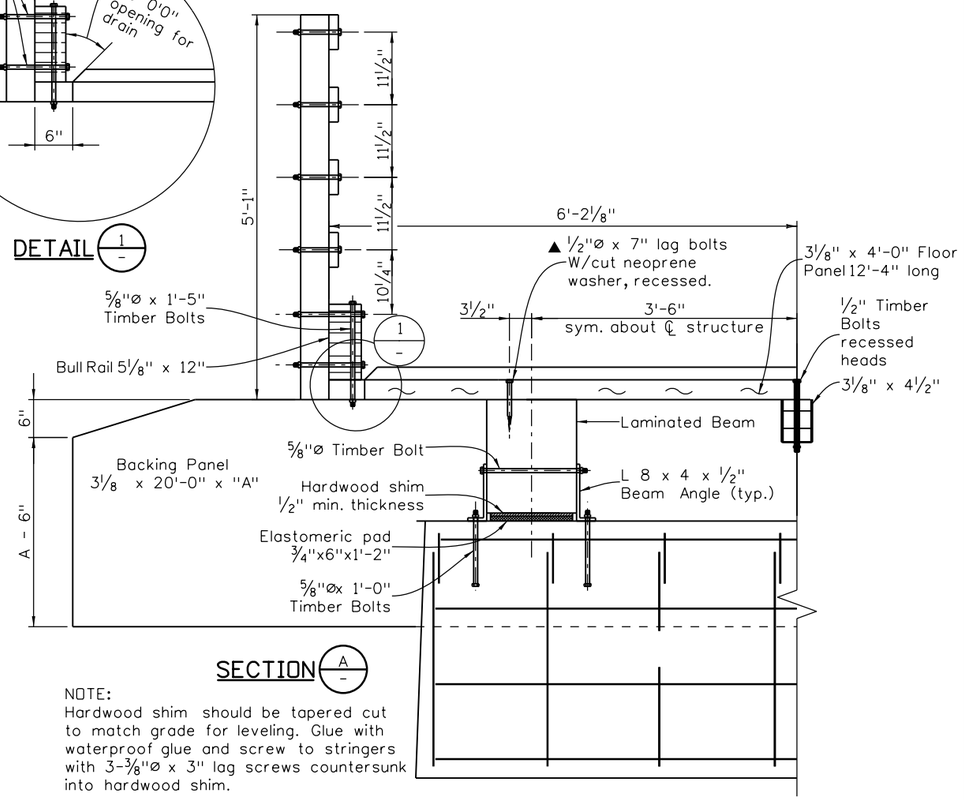

SECTION A

NOTE:
Hardwood shim should be tapered cut to match grade for leveling. Glue with waterproof glue and screw to stringers with 3-3/8"ø x 3" lag screws countersunk into hardwood shim.

Elastomeric Pad 3/4"x6"x1'-2"

Hardwood Shim 1/2" min. thick

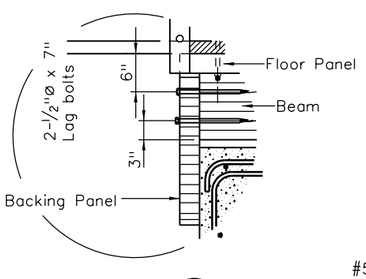

DETAIL 2

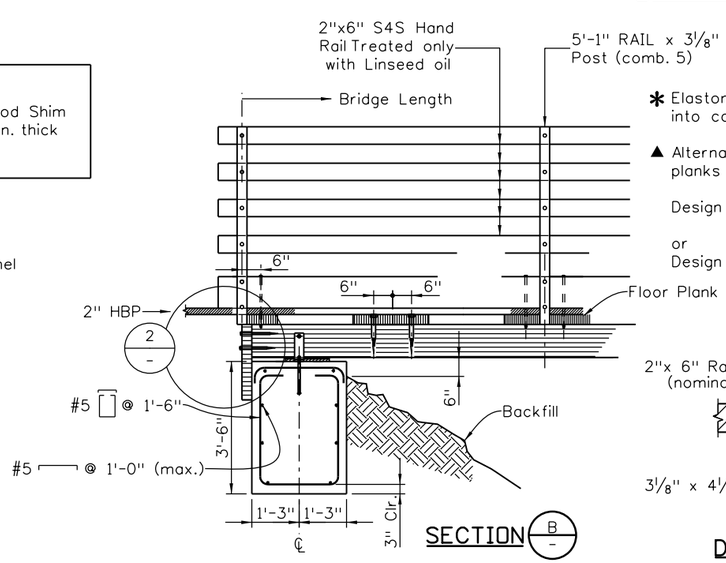

SECTION B

✱ Elastomeric pad to be recessed into concrete seat.

▲ Alternate methods of attaching floor planks may be submitted for approval

Design Load = State legal truck at 133% of Design Stresses

or

Design Load = 135 PSF for Pedestrians and pavement at 100% of Design Stresses

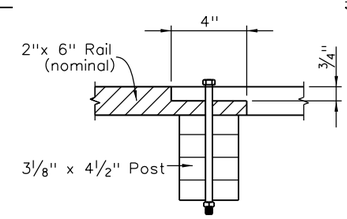

DETAIL RAIL SPLICE

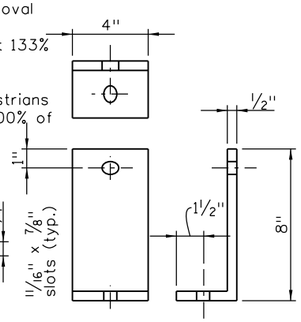

DETAIL OF ANGLE FOR BEARING

L8 x 4 x 1/2"

BRIDGE LENGTH (ft.)	SPAN LENGTH (in.)	BEAM DEPTH (in.)	BEAM WIDTH (in.)	BACKING PLANK "A" (ft.)	MAX.FTG PRESSURE (TSF)
16	13	10 1/2	14 1/4	2	0.8
24	21	15	14 1/4	2	0.9
32	29	18	14 1/4	3	1.0
40	37	21	14 1/4	3	1.2
48	45	25 1/2	14 1/4	3	1.3
56	53	30	14 1/4	4	1.4
64	61	33	14 1/4	4	1.6
72	69	34 1/2	16 1/4	4	1.7
80	77	39	16 1/4	4	1.8
88	85	43 1/2	16 1/4	5	2.0
96	98	43 1/2	18 1/4	5	2.1
104	101	48	18 1/4	5	2.2

Revision Dates		(Preliminary Stage Only)
9/02	3/07	10/13

Quantities		
	INITIAL	DATE
Quantities By	XXX	MM/YY
Checked By	XXX	MM/YY

Detail		
	INITIAL	DATE
Detailed By	XXX	MM/YY
Checked By	XXX	MM/YY

Design		
	INITIAL	DATE
Designed By	XXX	MM/YY
Checked By	XXX	MM/YY

Print Date: $DATE$
File Name: Sheet_B-508-PB.dgn
Horiz. Scale: NTS Vert. Scale: As Noted
Staff Bridge Branch - Unit 022X Unit Leader Initials

Sheet Revisions

Date:	Comments	Init.

Colorado Department of Transportation
4201 East Arkansas Avenue
Room 107
Denver, CO 80222
Phone: 303-757-9309 FAX: 303-757-9197
Staff Bridge Branch

Initials

As Constructed
No Revisions:
Revised:
Void:

TIMBER PEDESTRIAN BRIDGE DETAILS

Designer: XXXXXXXX
Detailer: XXXXXXXX
Sheet Subset: BRIDGE
Structure Numbers: X-XX-XX / X-XX-XX
Subset Sheets: BXX of XXX

Project No./Code
Project Number
Code
Sheet Number

$PLOT_INFO$