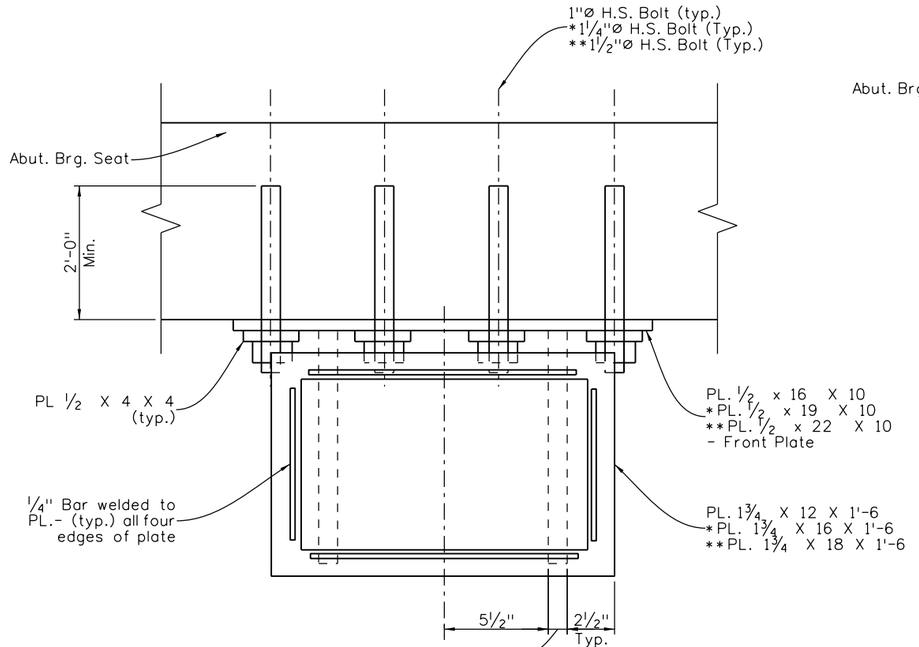

PLAN

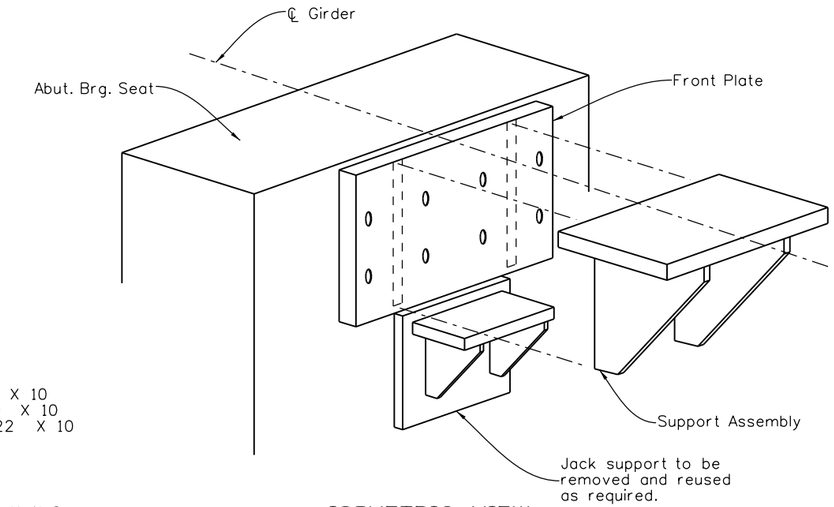

ISOMETRIC VIEW

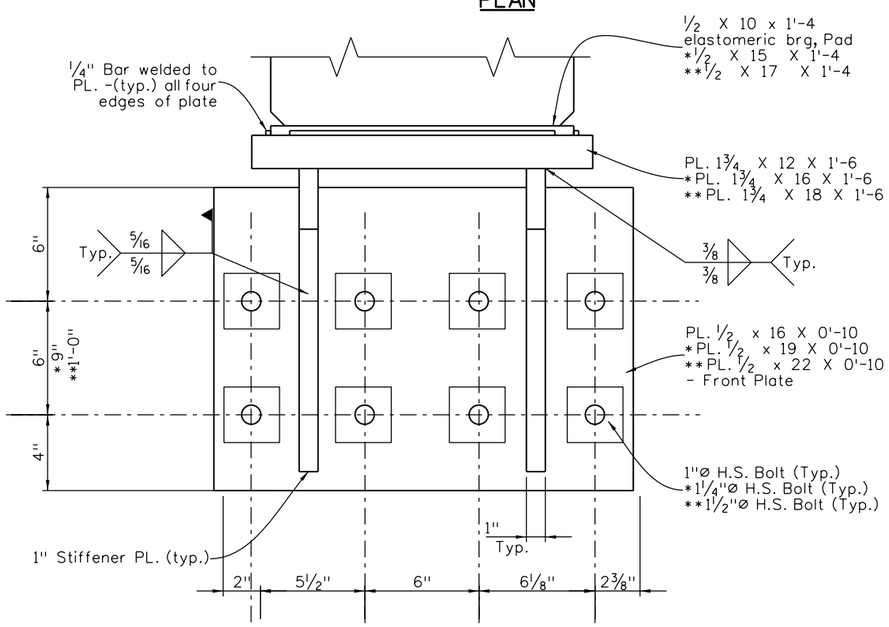

ELEVATION VIEW
(Front view Support Assembly)

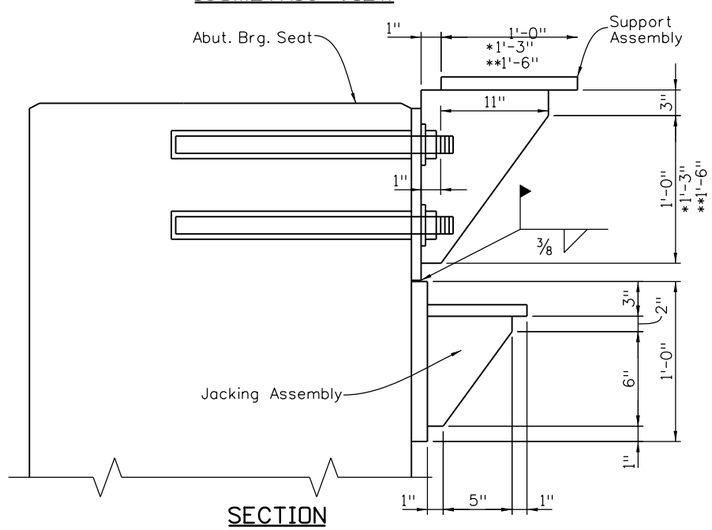

SECTION

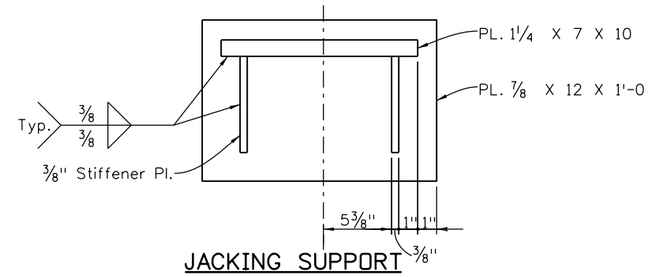

JACKING SUPPORT

GENERAL NOTES:

Design lengths mentioned below assume a csg structure type carrying an HS 20-44 loading with an 8" deck and 4" of asphalt.

Girder working stress reactions relating to span lengths may be different for different structure types. Girder working stress reactions should be verified.

Where three sizes or dimensions are shown, the call-out with no asterisks may be used for structures with span lengths up to 50 feet (girder working stress reaction = 107 kips).

Sizes or dimensions shown with one asterisk (*) may be used for structures with span lengths up to 80 feet (girder working stress reaction = 154 kips.)

Sizes or dimensions shown with two asterisks (**) may be used for structures with span lengths up to 95 feet (girder working stress reaction = 175 kips.)

Where only one size or dimension is given, the call-out is good for all designs up to 95 feet.

All bolts shall be A449 high strength bolts.

Grout bolts into holes with a non-shrink epoxy grout.

The contractor shall verify all dimensions prior to ordering materials.

SUGGESTED CONSTRUCTION PROCEDURE

1. Remove loose concrete and clean reinforcing steel.
2. Bolt the form in place and restore the abutment to its original section using an approved grout (Duracal, etc.)
3. Allow curing time as recommended by the Manufacturer before removing the form.
4. Locate and mark centerline of the girder on the face of the Abutment Bearing Seat.
5. Mark location of bolt holes on the abutment, see elevation view and section.
6. Drill holes in the abutment and grout bolts in place.
7. Cut holes in plywood form to match bolt holes in the abutment.
8. Using the form for a pattern, cut the bolt holes in the front plate.
9. Attach plates and tighten bolts. (100 lb-ft. Torque).
10. Raise the support assembly until the elastomeric pad is compressed 1/16" (200 psi x pad area = Jacking Force).
11. Field weld the support assembly to the front plate.
12. Paint all steel as directed by the Engineer

Revision Dates	8/95	3/99	11/99	4/02	9/02	3/07	10/13
(Preliminary Stage Only)							

Quantities	INITIAL	DATE
Quantities By	XXX	MM/YY
Checked By	XXX	MM/YY

Detail	INITIAL	DATE
Detailed By	XXX	MM/YY
Checked By	XXX	MM/YY

Design	INITIAL	DATE
Designed By	XXX	MM/YY
Checked By	XXX	MM/YY

Print Date: $DATE$
File Name: Sheet_B-509-2A.dgn
Horiz. Scale: NTS Vert. Scale: As Noted
Staff Bridge Branch - Unit 022X Unit Leader Initials

Sheet Revisions		
Date:	Comments	Init.

Colorado Department of Transportation
4201 East Arkansas Avenue
Room 107
Denver, CO 80222
Phone: 303-757-9309 FAX: 303-757-9197
Staff Bridge Branch

Initials

As Constructed
No Revisions:
Revised:
Void:

BEARING REPAIR DETAILS
107-175 KIPS

Designer:	XXXXXXXX	Structure Numbers	X-XX-XX
Detailer:	XXXXXXXX		X-XX-XX
Sheet Subset:	BRIDGE	Subset Sheets: BXX of XXX	

Project No./Code
Project Number
Code
Sheet Number

$PLOT_INFO$