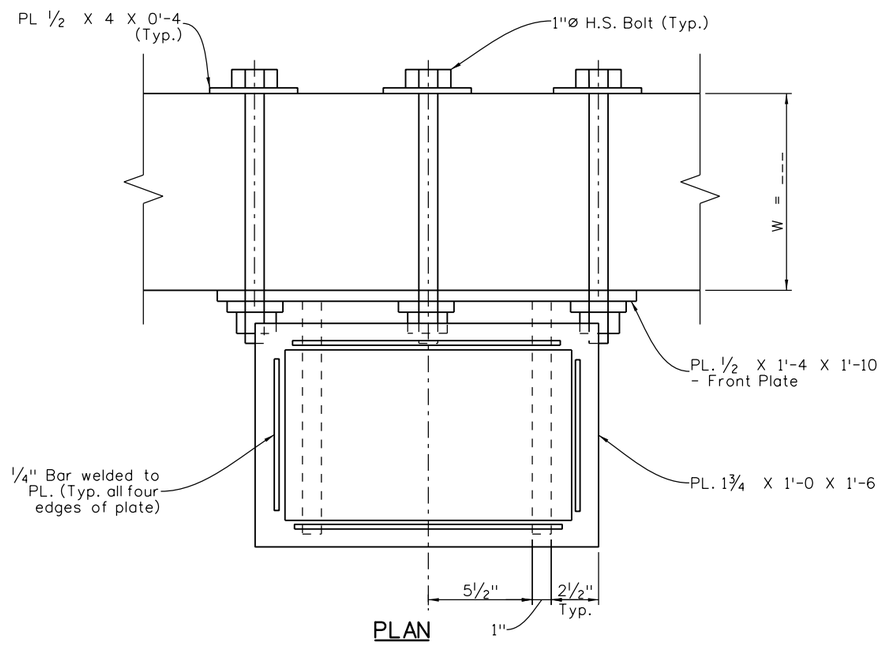

PLAN

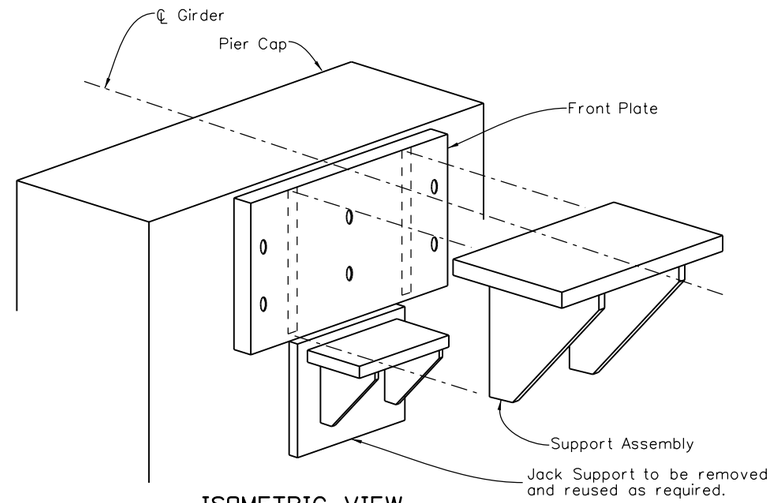

ISOMETRIC VIEW

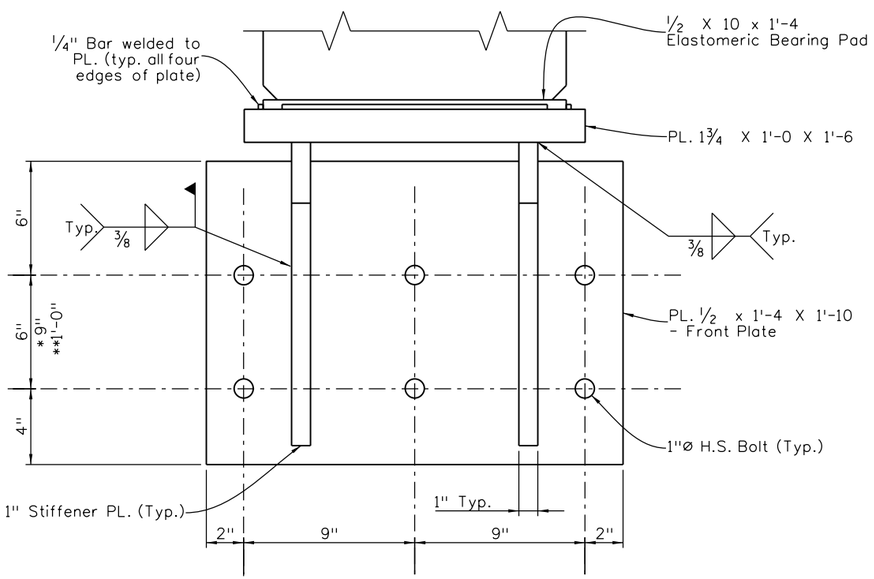

ELEVATION VIEW

(Front view Support Assembly)

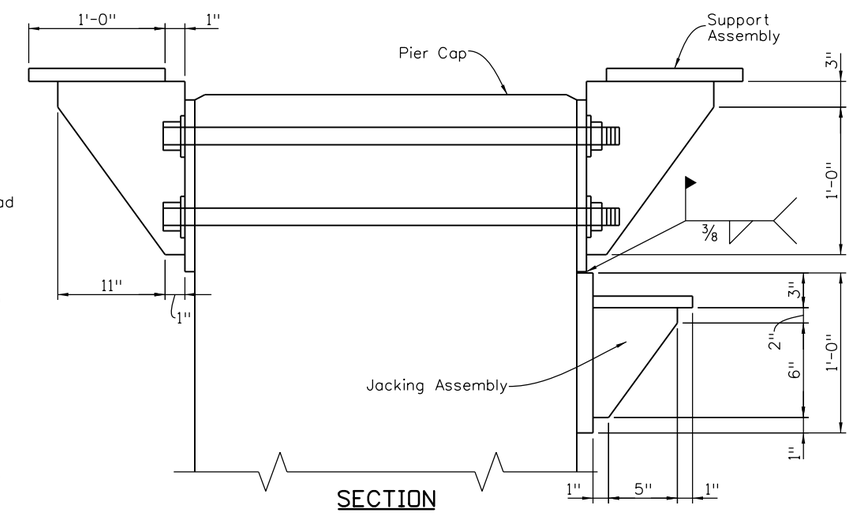

SECTION

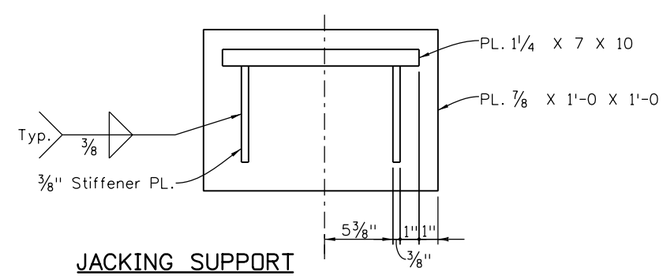

JACKING SUPPORT

GENERAL NOTES:

Design lengths below assume a csg structure type carrying an HS 20-44 loading with an 8" deck and 4" of asphalt.

Girder working stress reactions relating to span lengths may be different for different structure types. Girder working stress reactions should be verified.

This design may be used for structures with span lengths up to 32 feet (girder working stress reaction = 82 kips).

Note: where repair is required on both sides of a pier cap along a single girder line, place bearing assembly on both sides as shown in the section.

All bolts shall be A449 high strength bolts.

The contractor shall verify all dimensions prior to ordering materials.

SUGGESTED CONSTRUCTION PROCEDURE

1. Remove loose concrete and clean reinforcing steel.
2. Bolt the form in place and restore the pier cap to its original section using an approved grout (Duracal, etc.)
3. Allow curing time as recommended by the Manufacturer before removing the form.
4. Locate and mark centerline of the girder on the pier cap.
5. Mark location of bolt holes on the pier cap, see elevation view and section.
6. Drill holes in the pier cap and place bolts.
7. Cut holes in plywood form to match bolt holes in the pier cap.
8. Using the form for a pattern, cut the bolt holes in the front plate.
9. Attach plates and tighten bolts. (100 lb-ft. torque).
10. Raise the support assembly until the elastomeric pad is compressed 1/16" (200 psi x pad area = jacking force).
11. Field weld the support assembly to the front plate.
12. Paint all steel as directed by the Engineer.

Revision Dates (Preliminary Stage Only)						
Revision	12/95	3/99	11/99	4/02	9/02	3/07	10/13

Design			Detail			Quantities		
	INITIAL	DATE		INITIAL	DATE		INITIAL	DATE
Designed By	XXX	MM/YY	Detailed By	XXX	MM/YY	Quantities By	XXX	MM/YY
Checked By	XXX	MM/YY	Checked By	XXX	MM/YY	Checked By	XXX	MM/YY

Print Date: $DATE$
File Name: Sheet_B-509-2C.dgn
Horiz. Scale: NTS Vert. Scale: As Noted
Staff Bridge Branch - Unit 022X Unit Leader Initials

Sheet Revisions		
Date:	Comments	Init.

Colorado Department of Transportation
4201 East Arkansas Avenue
Room 107
Denver, CO 80222
Phone: 303-757-9309 FAX: 303-757-9197
Staff Bridge Branch

Initials

As Constructed
No Revisions:
Revised:
Void:

BEARING REPAIR DETAILS, 82 KIPS

Designer:	XXXXXXXX	Structure Numbers	X-XX-XX
Detailer:	XXXXXXXX		X-XX-XX
Sheet Subset:	BRIDGE	Subset Sheets:	BXX of XXX

Project No./Code
Project Number
Code
Sheet Number

$PLOT_INFO$