B-512-3A

(Use with B-512-3B)

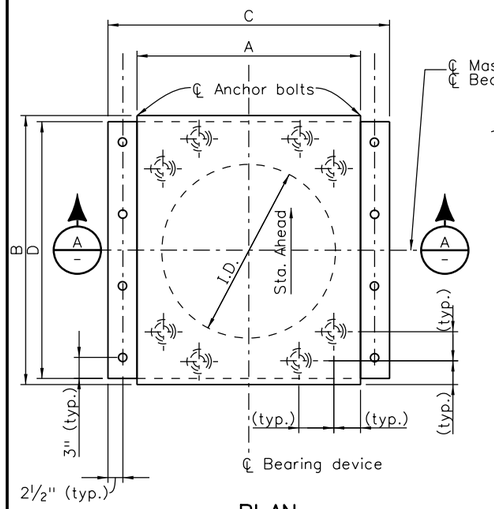

PLAN

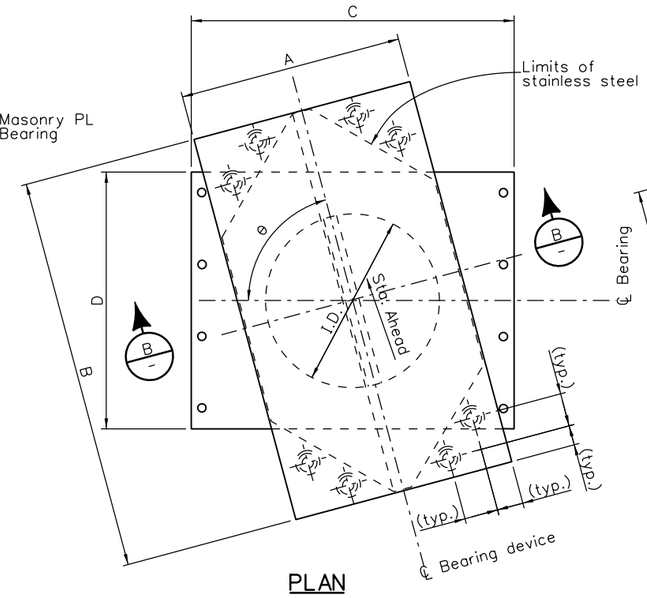

PLAN

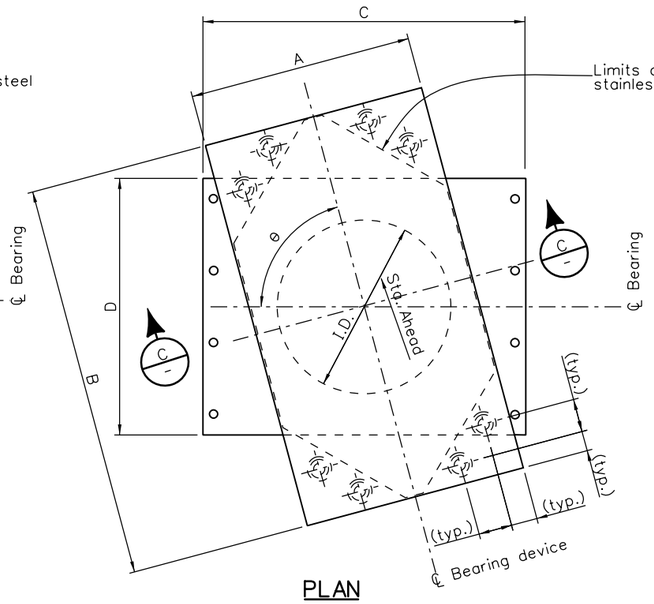

PLAN

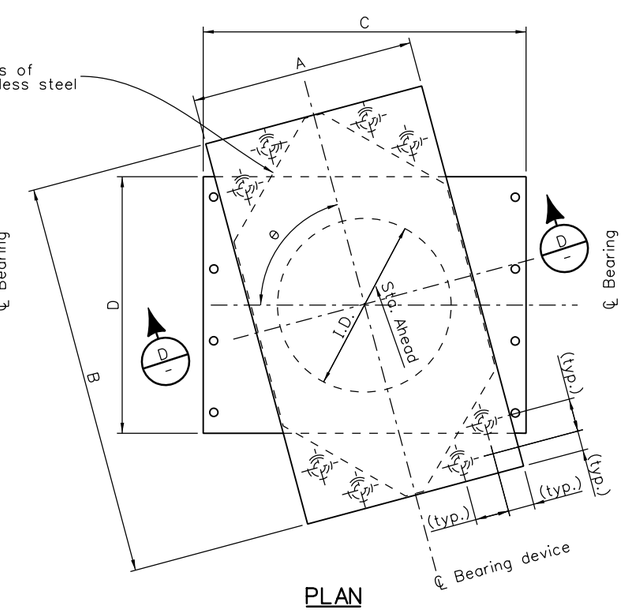

PLAN

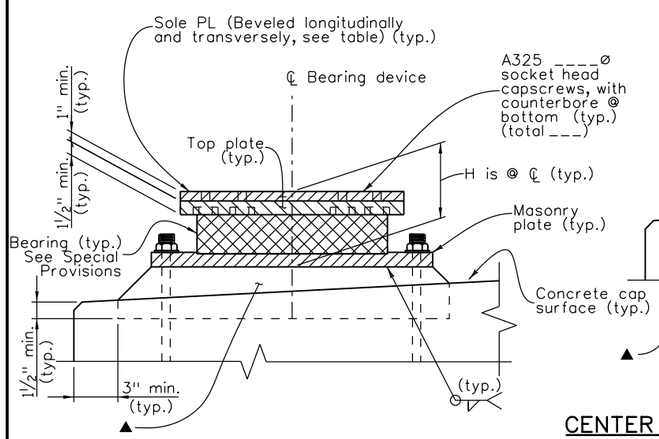

SECTION A

FIXED BEARING

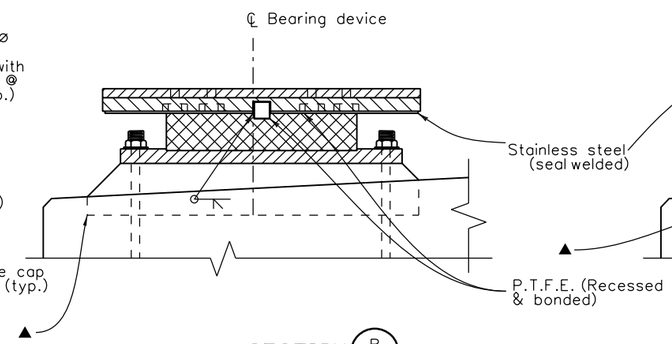

SECTION B

CENTER GUIDED EXPANSION BEARING

(See Fixed Brg. for typ. dimensions)

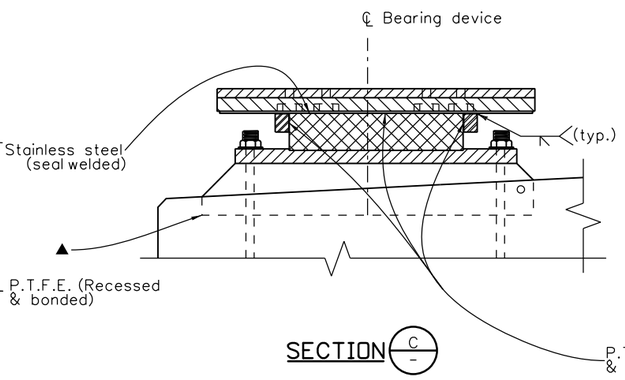

SECTION C

SIDE BAR GUIDED EXPANSION BEARING

(See Fixed Brg. for typ. dimensions)

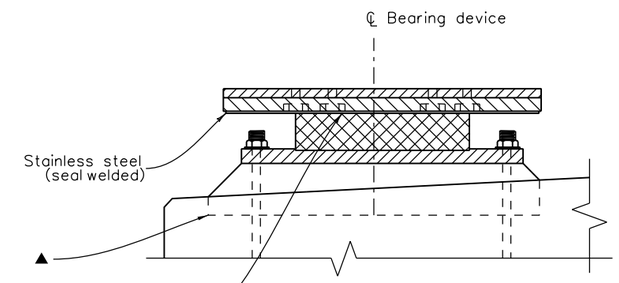

SECTION D

NON-GUIDED EXPANSION BEARING

(See Fixed Brg. for typ. dimensions)

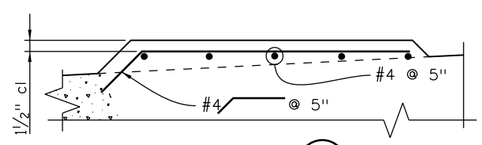

DETAIL 1

▲ Use non-shrink approved grout in formed cavity or see Detail "1" for alternate built-up monolithic cap seat.

Revision Dates (Preliminary Stage Only)						
Rev.	12/92	9/93	8/94	3/99	11/99	4/02	3/07	10/13

Quantities		
Quantities By	INITIAL	DATE
Checked By	XXX	MM/YY
	XXX	MM/YY

Detail		
Detailed By	INITIAL	DATE
Checked By	XXX	MM/YY
	XXX	MM/YY

Design		
Designed By	INITIAL	DATE
Checked By	XXX	MM/YY
	XXX	MM/YY

Print Date: $DATE$

File Name: Sheet_B-512-3A.dgn

Horiz. Scale: NTS Vert. Scale: As Noted

Staff Bridge Branch - Unit 022X Unit Leader Initials

Sheet Revisions		
Date:	Comments	Init.

Colorado Department of Transportation

4201 East Arkansas Avenue
Room 107
Denver, CO 80222
Phone: 303-757-9309 FAX: 303-757-9197

Staff Bridge Branch Initials

As Constructed

No Revisions:

Revised:

Void:

BEARING DEVICE (TYPE III)

Designer:	XXXXXXXX	Structure Numbers	X-XX-XX
Detailer:	XXXXXXXX		X-XX-XX
Sheet Subset:	BRIDGE	Subset Sheets:	BXX of XXX

Project No./Code

Project Number

Code

Sheet Number

$PLOT_INFO$