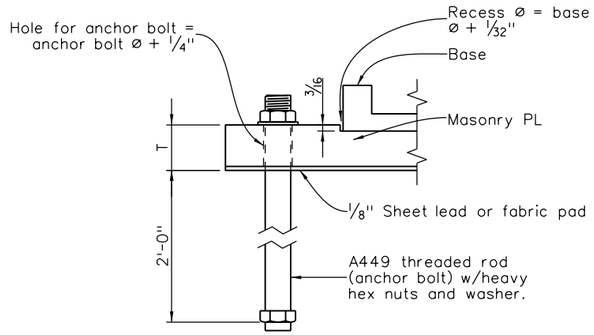

ANCHOR BOLT DETAIL

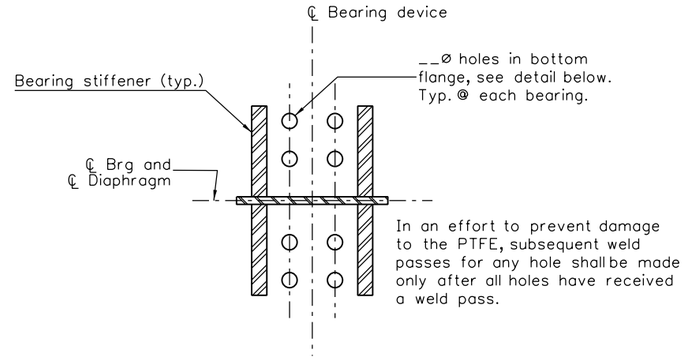

PLAN

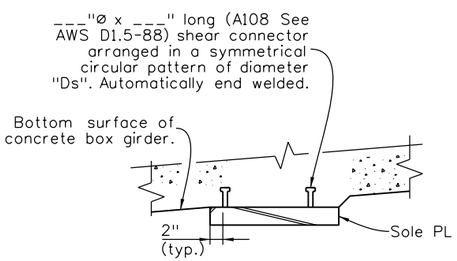

SOLE PLATE TO GIRDER CONNECTION
(CONCRETE GIRDER)

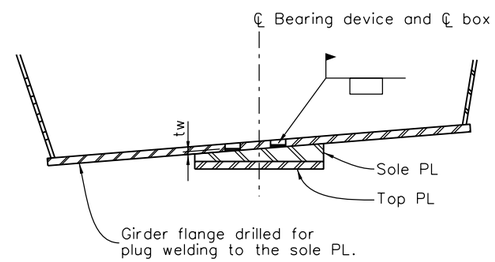

SECTION
Brg. stiffener and diaphragm not shown

TOP PLATE OF GIRDER CONNECTION
(STEEL GIRDER)

NOTES:

All structure steel for the bearing devices, including sole plates, top plates, and masonry plates, shall be AASHTO M270 (ASTM A709) Grade ____ unless otherwise shown. A588 or A572 may be substituted for Grade 36 at no additional cost to the project.

Bearing seat elevations at abutments and piers shall be checked and adjusted according to the final dimensions of bearing assemblies adopted.

Longitudinal structure movement due to temperature and shrinkage is based on a mid-range temperature of 40°F. If site temperature is not 40°, a longitudinal offset of top elements of the bearing (above sliding surface) shall be made in the field based on the 10° temperature increment in the table. In addition, longitudinal one way structure movement due to prestress shortening and creep shall be accommodated for all temperature ranges with the initial offset in the table away from the fixed bearing.

Anchor bolts may be set in wet concrete of bearing seat, or placed within a formed cylindrical void 4" in diameter and then grouted with high strength epoxy grout.

The internal surfaces of the pot cavity and the bottom surface of the piston shall be polished after zinc metalizing.

Fx = Fixed bearing
Gd = Guided expansion bearing
Exp = Non-guided (free floating) expansion bearing
PTFE = Polytetrafluoroethylene

Designer/Detailer:
Add 2" to the Theoretical value for dimension B in guided and non-guided bearings and add 2" to the theoretical value for dimension A in non-guided bearings to provide a design and construction tolerance.

Designer shall specify grade of steel required

ACCEPTABLE ALTERNATES

D. S. Brown Company
North Baltimore, Ohio

Cosmec, Inc.
Walpole, MA

Con-Serv, Inc.
Georgetown, SC

R. J. Watson, Inc.
Amherst, NY
(Disk Bearing Alternate)

Location	Quant.	Fx. Gd. Exp.	Vertical Load Per Brg. (kips)		Horiz. Load Per Brg. (kips)				Longit. Range of Structure Movement	Rotation (Radians)	Top Plate (Sole Plate similar)		Bearing	Masonry Plate (inches)			Top Connections						A449 Zinc Plated Anchor Bolts		Total Height	X-Slope % + Looking Ah. Sta.	Grade % + Ah. sta.	Guide Angle Θ	10° Temp. Incr.	Initial Offset
					Service		Strength										Field Plug Welds (Steel Str.)			Concrete Anchor Studs										
			Service	Strength	Transv.	Longit.	Transv.	Longit.	(In.)		A	B	ID	C	D	T	No.	ø(In.)	tw	No.	Ds	ø(In.)	No.	Size	H					(In.)
Abut. 1																														

Quantities		
	INITIAL	DATE
Quantities By	XXX	MM/YY
Checked By	XXX	MM/YY

Detail		
	INITIAL	DATE
Detailed By	XXX	MM/YY
Checked By	XXX	MM/YY

Design		
	INITIAL	DATE
Designed By	XXX	MM/YY
Checked By	XXX	MM/YY

Revision Dates (Preliminary Stage Only)						
3/93	3/99	11/99	4/02	9/02	6/04	3/07	10/13

Print Date: $DATE$
File Name: Sheet_B-512-3B.dgn
Horiz. Scale: NTS Vert. Scale: As Noted
Staff Bridge Branch - Unit 022X Unit Leader Initials

Sheet Revisions

Date:	Comments	Init.

Colorado Department of Transportation
4201 East Arkansas Avenue
Room 107
Denver, CO 80222
Phone: 303-757-9309 FAX: 303-757-9197
Staff Bridge Branch

Initials

As Constructed
No Revisions:
Revised:
Void:

BEARING DEVICE
(TYPE III)

Designer: XXXXXXXX
Detailer: XXXXXXXX
Sheet Subset: BRIDGE
Structure Numbers X-XX-XX X-XX-XX
Subset Sheets: BXX of XXX

Project No./Code
Project Number
Code
Sheet Number

$PLOT_INFO$