B-518-1A
(Use with B-518-1)

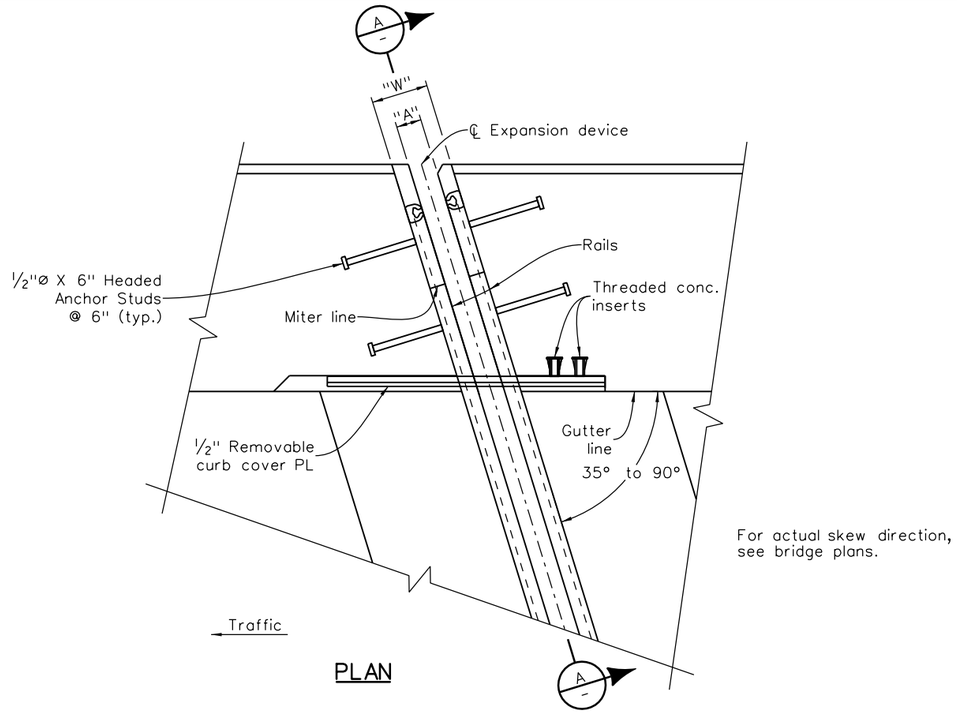

PLAN

For actual skew direction, see bridge plans.

Provide 2" minimum cover between anchors and all concrete surfaces.

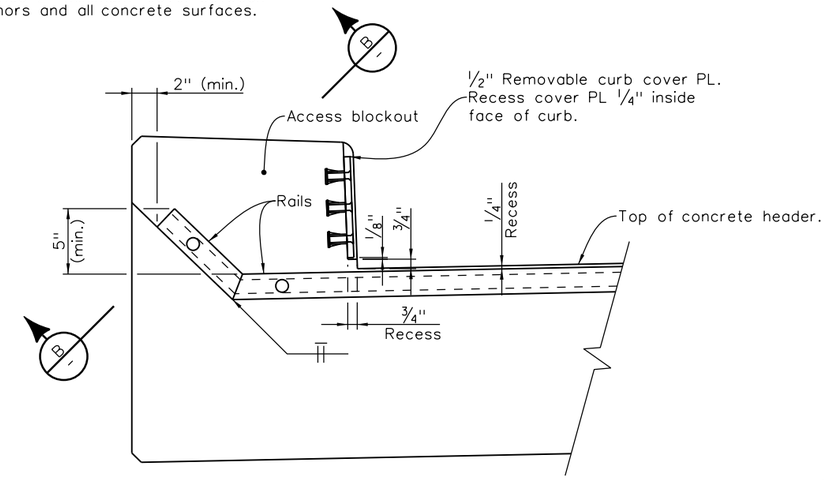

SECTION A

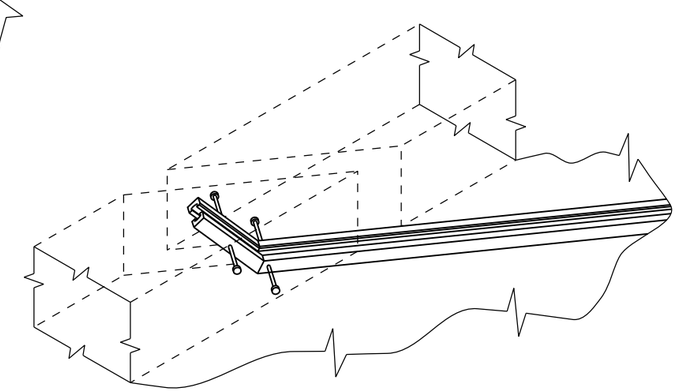

ISOMETRIC VIEW

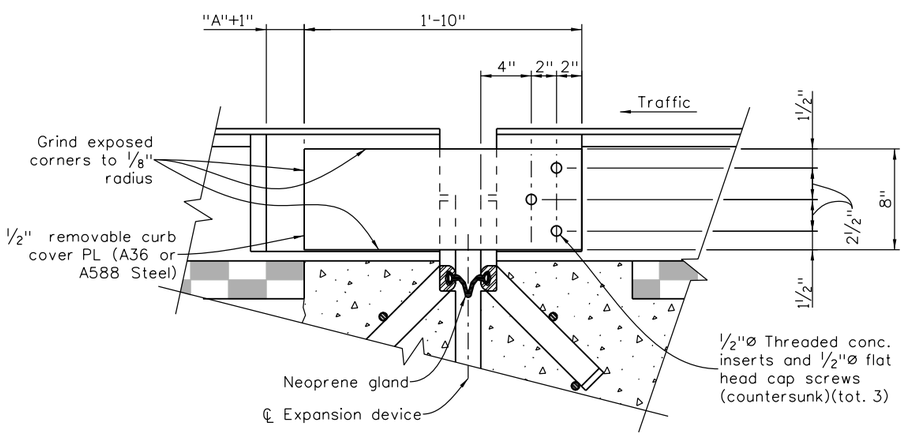

ELEVATION

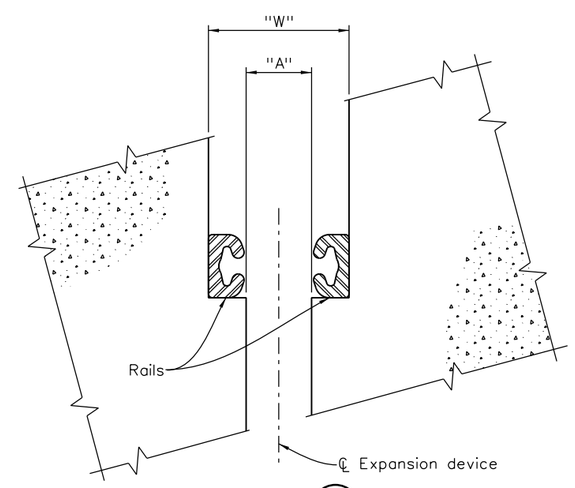

SECTION B

Revision Dates								
8/94	3/99	11/99	5/01	4/02	3/07	5/13	10/13	

(Preliminary Stage Only)

Design			Detail			Quantities		
	INITIAL	DATE		INITIAL	DATE		INITIAL	DATE
Designed By	XXX	MM/YY	Detailed By	XXX	MM/YY	Quantities By	XXX	MM/YY
Checked By	XXX	MM/YY	Checked By	XXX	MM/YY	Checked By	XXX	MM/YY

$PLOT_INFO$

Print Date: $DATE$
File Name: Sheet_B-518-1A.dgn
Horiz. Scale: NTS Vert. Scale: As Noted
Staff Bridge Branch - Unit 022X Unit Leader Initials

Sheet Revisions		
Date:	Comments	Init.

Colorado Department of Transportation
4201 East Arkansas Avenue
Room 107
Denver, CO 80222
Phone: 303-757-9309 FAX: 303-757-9197
Staff Bridge Branch

Initials

As Constructed
No Revisions:
Revised:
Void:

BRIDGE EXPANSION DEVICE
(0 - 4 INCH) OVER CURB

Designer:	XXXXXXXX	Structure Numbers	X-XX-XX
Detailer:	XXXXXXXX		X-XX-XX
Sheet Subset:	BRIDGE	Subset Sheets:	BXX of XXX

Project No./Code
Project Number
Code
Sheet Number