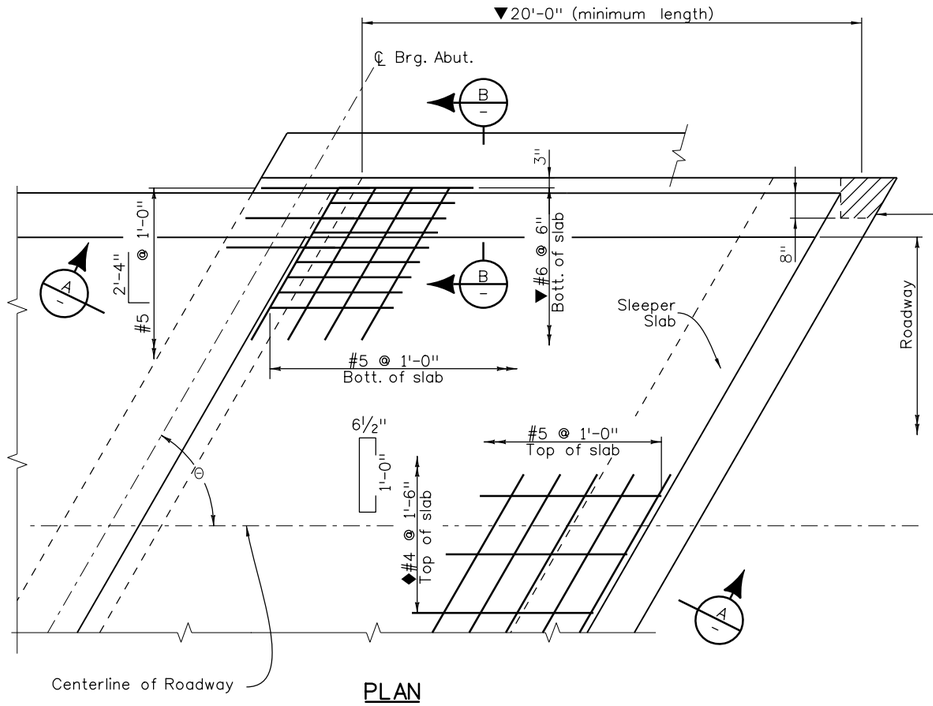

PLAN

For type 3 guardrail, notch sleeper slab for guardrail post. Cut reinforcing at notch. For type 7 guardrail, place end of guardrail on sleeper slab.

▼Designer: Use #9 for approach slabs greater than 20' and less than 31' long.

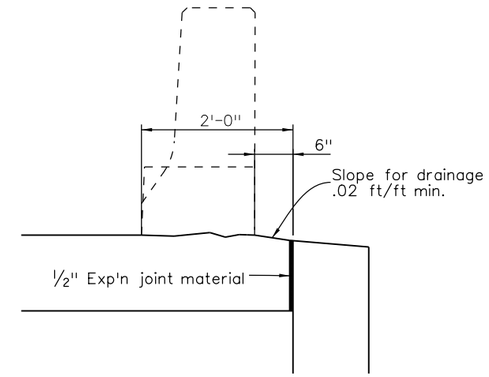

SECTION B –

NOTES:

Concrete Class D (Bridge) shall be used for approach slabs.

Approach slab concrete shall be cured in accordance with the Specifications for Bridge Deck Concrete in Subsection 601.

The top surface of the post-tensioning block, if any, shall be covered with 1" of low density polystyrene foam. See Dwg. No. B_____.

½" expansion joint material shall meet AASHTO Spec. M213.

Designer: Do not use this sheet when the bridge movement exceeds ½", nor when the approach roadway is concrete.

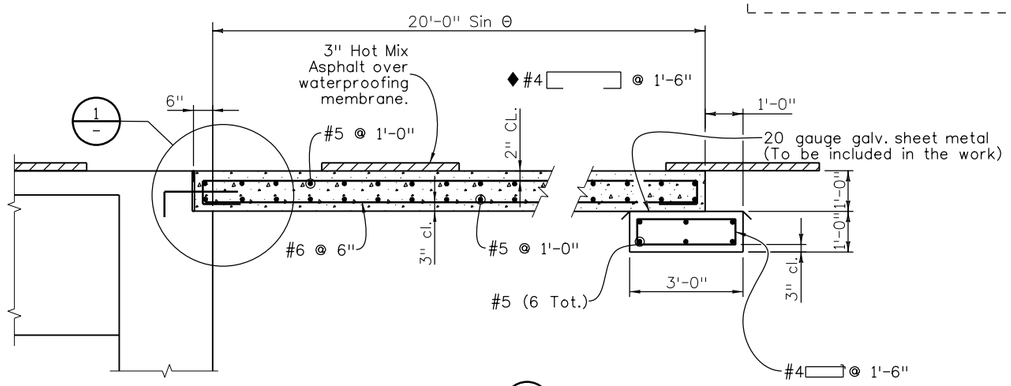

SECTION A –

With asphalt roadway

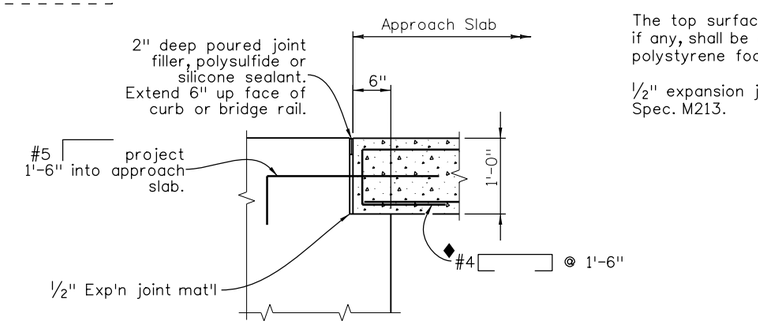

◆Contractor may use [ ] 7" 1'-0"

DETAIL 1 –

Revision Dates								
3/99	11/99	5/00	4/02	6/04	3/07	10/13	6/15	
(Preliminary Stage Only)								

Design			Detail			Quantities		
	INITIAL	DATE		INITIAL	DATE		INITIAL	DATE
Designed By	XXX	MM/YY	Detailed By	XXX	MM/YY	Quantities By	XXX	MM/YY
Checked By	XXX	MM/YY	Checked By	XXX	MM/YY	Checked By	XXX	MM/YY

$PLOT_INFO$

Print Date: $DATE$	Sheet Revisions		
File Name: Sheet_B-601-1.dgn	Date:	Comments	Init.
Horiz. Scale: NTS Vert. Scale: As Noted			
Staff Bridge Branch - Unit 022X Unit Leader Initials			

Colorado Department of Transportation
4201 East Arkansas Avenue
Room 107
Denver, CO 80222
Phone: 303-757-9309 FAX: 303-757-9197
Staff Bridge Branch Initials

As Constructed
No Revisions:
Revised:
Void:

APPROACH SLAB DETAILS
ASPHALT W/ SLEEPER

Designer:	XXXXXXXX	Structure Numbers	X-XX-XX
Detailer:	XXXXXXXX		X-XX-XX
Sheet Subset:	BRIDGE	Subset Sheets:	BXX of XXX

Project No./Code
Project Number
Code
Sheet Number