B-606-10T

(Use with B-606-10A)

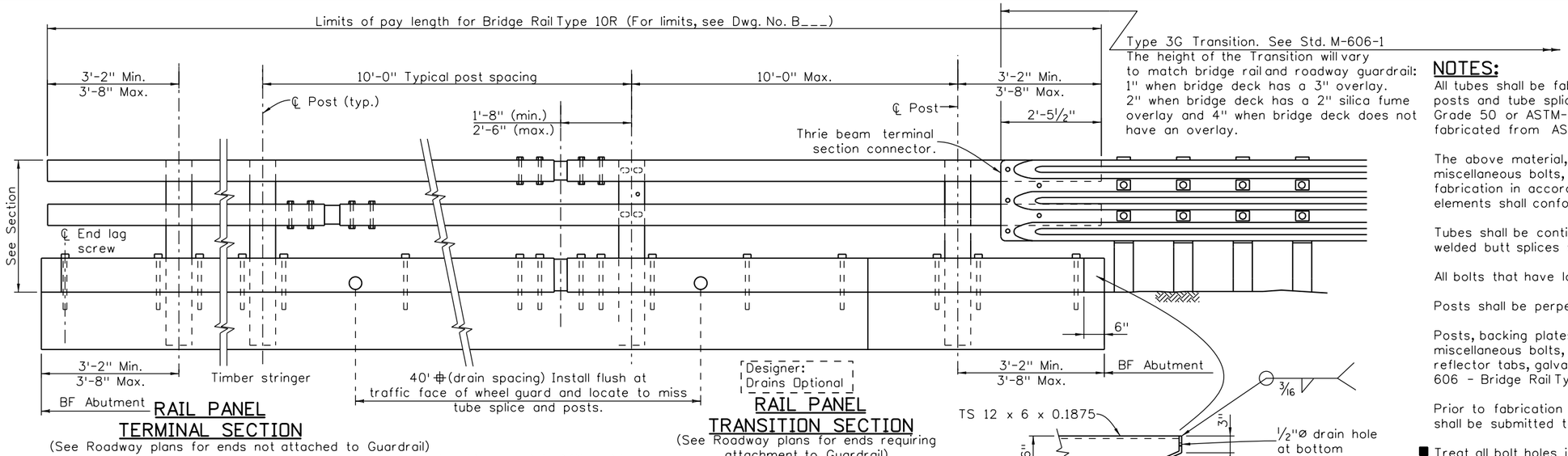

RAIL PANEL TERMINAL SECTION

(See Roadway plans for ends not attached to Guardrail)

RAIL PANEL TRANSITION SECTION

(See Roadway plans for ends requiring attachment to Guardrail)

ELEVATION - BRIDGE RAIL

Type 3G Transition. See Std. M-606-1
The height of the Transition will vary to match bridge rail and roadway guardrail:
1" when bridge deck has a 3" overlay.
2" when bridge deck has a 2" silica fume overlay and 4" when bridge deck does not have an overlay.

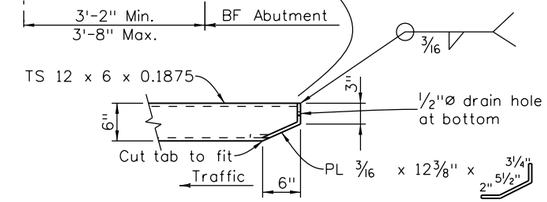

NOTES:

All tubes shall be fabricated from ASTM A-500 Grade B. All posts and tube splices shall be fabricated from ASTM A-572 Grade 50 or ASTM-A588 steel. All miscellaneous steel shall be fabricated from ASTM A-36 steel.

The above material, except as noted, and all anchor bolts and miscellaneous bolts, nuts and washers shall be galvanized after fabrication in accordance with Section 509. Structural steel elements shall conform to the requirements of Section 509.

Tubes shall be continuous over not less than two posts. No welded butt splices will be allowed in the tube sections.

All bolts that have lock washers shall be tightened to snug only.

Posts shall be perpendicular to the grade of the deck.

Posts, backing plates, miscellaneous plates, angles, lag screws, miscellaneous bolts, nuts, washers, tubes, tube splices, end plates, reflector tabs, galvanizing and painting shall be included in Item 606 - Bridge Rail Type 10R.

Prior to fabrication of this item, three sets of working drawings shall be submitted to the Engineer for information only.

■ Treat all bolt holes in timber with an acceptable timber treatment (preservative).

Strucural Steel:

AASHTO M-222 (ASTM A-588) or AASHTO M-223 (ASTM A-572)	f_y = 50,000 psi
AASHTO M-183 (ASTM A-36)	f_y = 36,000 psi
Cold formed ASTM A-500 Grade B	f_y = 46,000 psi

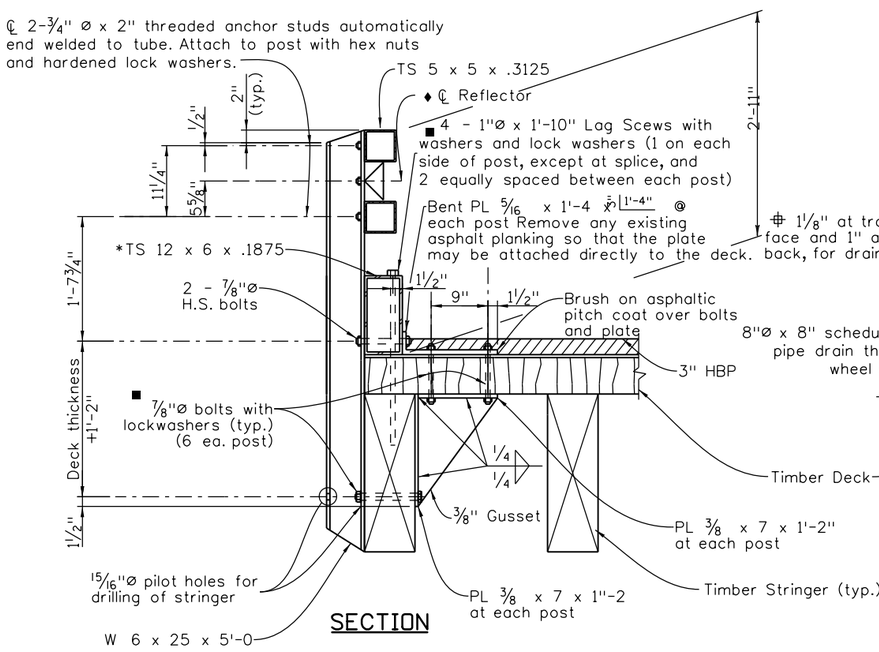

SECTION

♦ See M-606-1 for details - attach to post with ⅝"Ø bolt with hex nut and lock washer

* Existing timber wheel guard shall be removed.

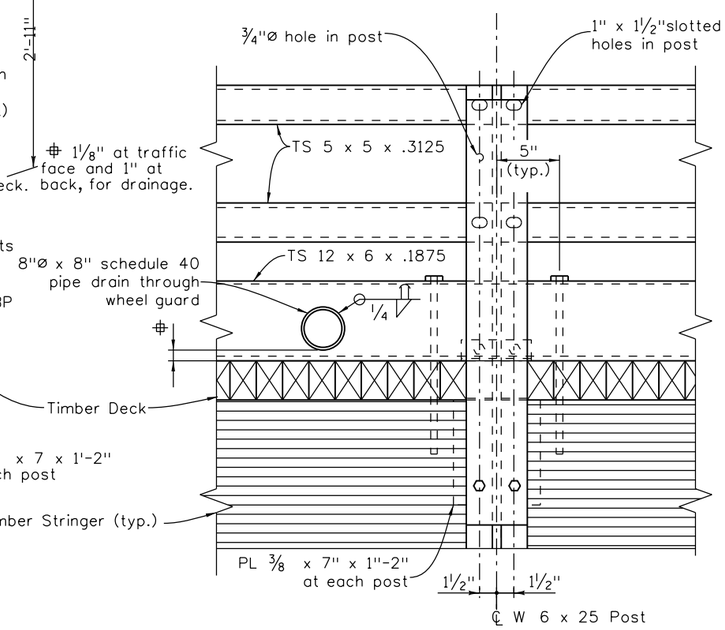

ELEVATION

For additional details see next rail sheets

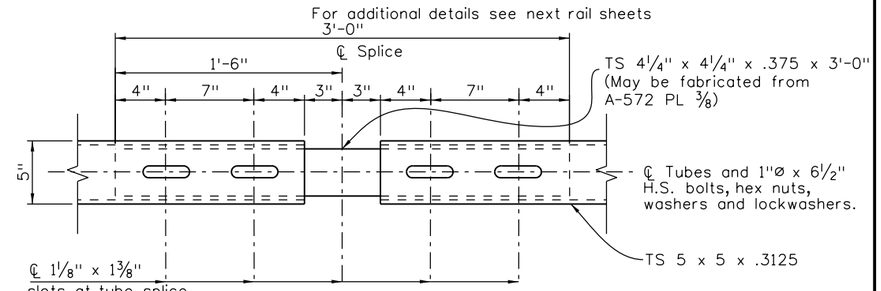

Slot both inner and outer tubes.
Stagger top of bottom splices into different post spacings.
Place at opposite ends of same post space.

PLAN - TUBE SPLICE

Use similar detail at 1' X 6" wheel guard tubing, using a fabricated splice tube of 11½" x 5½" x 3/16". Vertically center 1" x 1'-10" lag screws in slotted holes in tube splices. Screws must go through deck and into stringer.

FOR INFORMATION ONLY

Description	Unit	Per Lin. Ft.
Structural Steel (Galvanized)	Lb	81.3

Revision Dates (Preliminary Stage Only)					
3/99	11/99	5/00	4/02	3/07	10/13

Quantities		
	INITIAL	DATE
Quantities By	XXX	MM/YY
Checked By	XXX	MM/YY

Detail		
	INITIAL	DATE
Detailed By	XXX	MM/YY
Checked By	XXX	MM/YY

Design		
	INITIAL	DATE
Designed By	XXX	MM/YY
Checked By	XXX	MM/YY

Print Date: $DATE$	Sheet Revisions		
File Name: Sheet_B-606-10T.dgn	Date:	Comments	Init.
Horiz. Scale: NTS Vert. Scale: As Noted			
Staff Bridge Branch - Unit 022X Unit Leader Initials			

Colorado Department of Transportation
4201 East Arkansas Avenue
Room 107
Denver, CO 80222
Phone: 303-757-9309 FAX: 303-757-9197
Staff Bridge Branch

Initials

As Constructed	BRIDGE RAIL TYPE 10R REPLACEMENT RAIL			Project No./Code
No Revisions:				Project Number
Revised:	Designer: XXXXXXXX	Structure Numbers	X-XX-XX	Code
	Detailer: XXXXXXXX		X-XX-XX	
Void:	Sheet Subset: BRIDGE	Subset Sheets: BXX of XXX		Sheet Number

$PLOT_INFO$