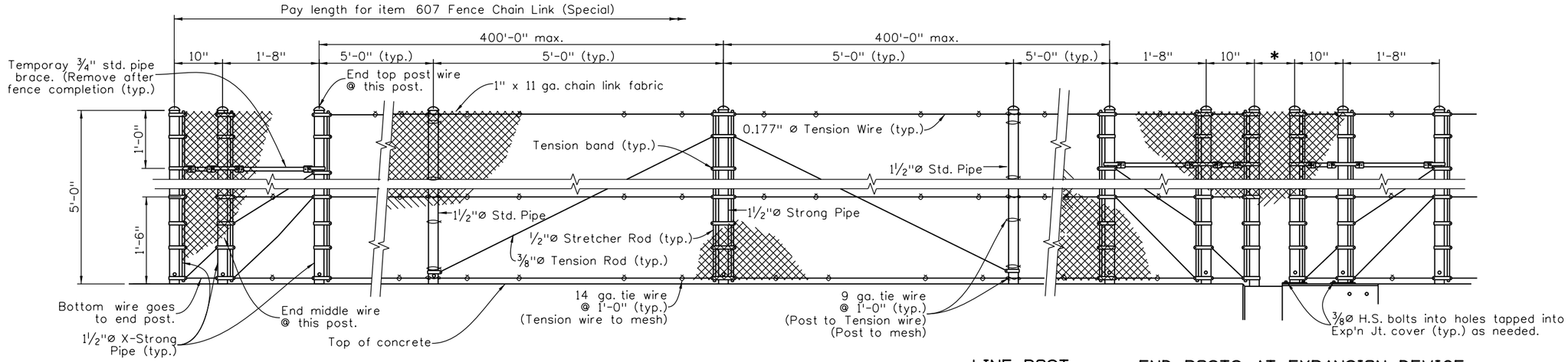

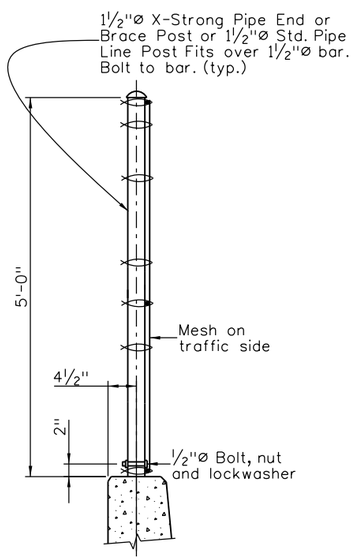

TYPICAL SECTION

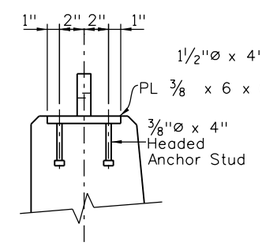

SECTION

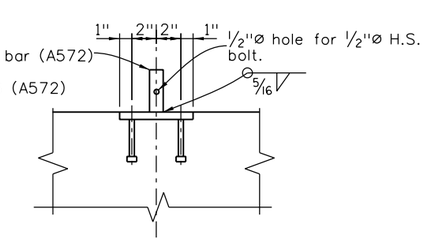

ELEVATION

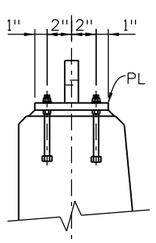

SECTION

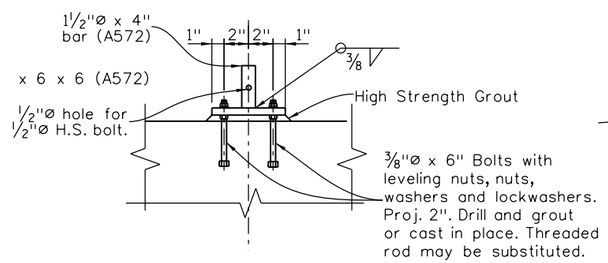

ELEVATION

ALTERNATE ANCHORAGE DETAILS

* For Steel Bridges:
Use ⅛ of rated joint motion +6", 8" min. If not known, rated motion may be assumed to be 1¼" per 100' contributing to motion.

* For Concrete Bridges:
Use ¼ of rated joint motion +6", 8" min. If not known, rated motion may be assumed to be 1¼" per 100' contributing to motion.

If * exceeds 10" run mesh over gap with enough slack for ⅛ of rated expansion motion.

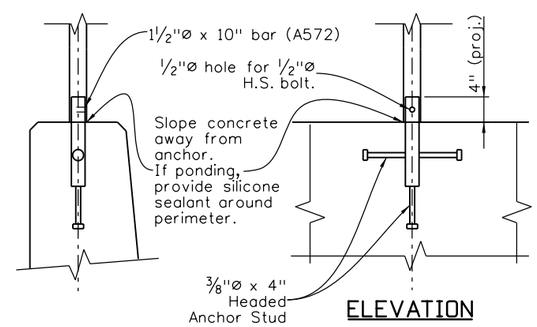

ELEVATION

ANCHORAGE DETAIL

NOTES

Anchorage assembly shall be galvanized after fabrication. If Vinyl Coating is specified, the fence assembly shall be Galvanized and Vinyl Coated after fabrication. Anchorages shall only be galvanized after fabrication.

Tension Rods and Wires shall have turnbuckles.

Post shall be vertical.

Pipe shall conform to ASTM A53 Type E or S, Grade B.

DESIGN DATA

Total Tension = 5400 lbs
Test with: Max Midbay deflection = 1¼" for Lateral Load of 160 lbs. on 1 ft^2. 1'-6" up @ center of bay.

Live Load: wind load = 11 psf
or snow impact load = 96 plf @ 1'-6" up

Structural Steel: Pipe f_y = 35,000 psi
ASTM A572 (GR 50) f_y = 50,000 psi

Standard Color Vinyl Coatings over Galvanized Wire	Munsell Color System No. (as per ASTM)
Galvanized Only	None
Brown	7YR 2.4/1.75
Green	8.8G 2.63/5.8
Black	1.8PB 1.26/0.5

Special Color Vinyl Coatings over Galvanized Wire	☐Federal Color No. ☐Munsell Color System No

If the specific color of coating is not marked and the Federal Color No. or the Munsell Color System No. is not given, vinyl coating is not required.

Revision Dates							
8/94	8/96	3/99	11/99	5/00	4/02	3/07	10/13

(Preliminary Stage Only)

Design			Detail			Quantities		
	INITIAL	DATE		INITIAL	DATE		INITIAL	DATE
Designed By	XXX	MM/YY	Detailed By	XXX	MM/YY	Quantities By	XXX	MM/YY
Checked By	XXX	MM/YY	Checked By	XXX	MM/YY	Checked By	XXX	MM/YY

Print Date: $DATE$
File Name: Sheet_B-607-5.dgn
Horiz. Scale: NTS Vert. Scale: As Noted
Staff Bridge Branch - Unit 022X Unit Leader Initials

Sheet Revisions		
Date:	Comments	Init.

Colorado Department of Transportation
4201 East Arkansas Avenue
Room 107
Denver, CO 80222
Phone: 303-757-9309 FAX: 303-757-9197
Staff Bridge Branch

Initials

As Constructed
No Revisions:
Revised:
Void:

FENCH CHAIN LINK (SPECIAL) (60 INCH)

Designer:	XXXXXXXX	Structure Numbers	X-XX-XX
Detailer:	XXXXXXXX		X-XX-XX
Sheet Subset:	BRIDGE	Subset Sheets: BXX of XXX	

Project No./Code
Project Number
Code
Sheet Number

$PLOT_INFO$