B-618-2

(use with B-618-1 and B-618-3; also add B-618-7 when horizontal curve is present.)

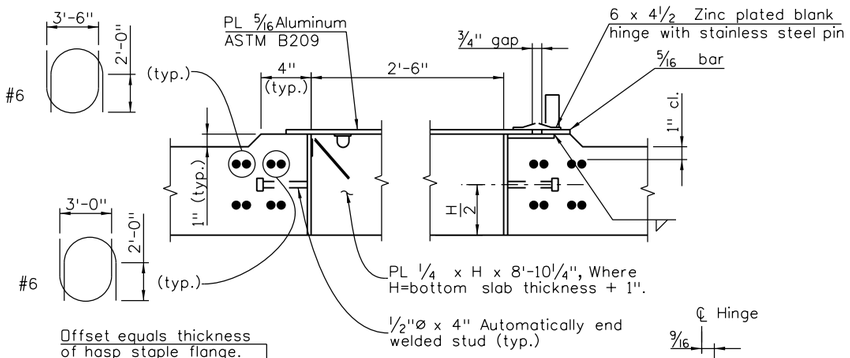

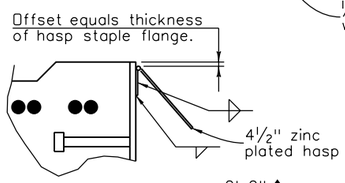

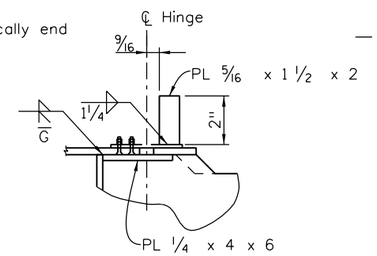

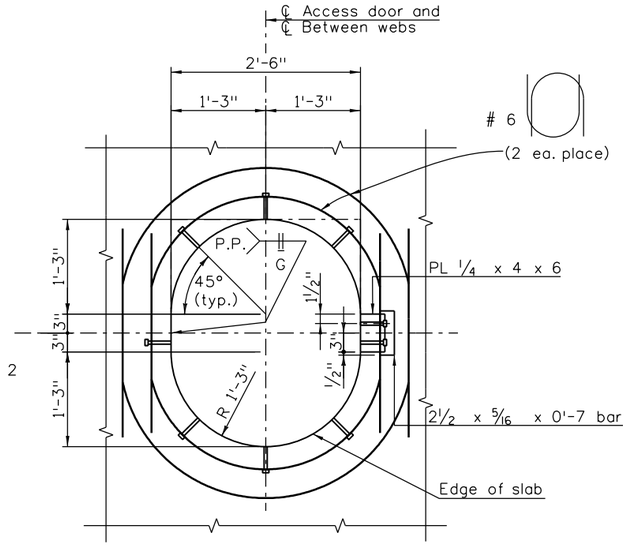

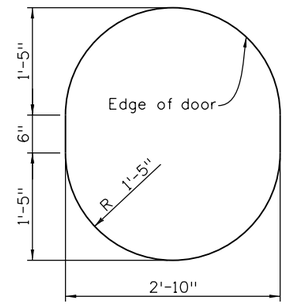

NOTES:

See abutment details and superstructure details for dimensions and reinforcing not shown.

Grind galvanizing from frame, where the hasp or hinge attaches, prior to welding. After welding, paint the weld and surrounding areas with zinc rich paint meeting Military Specifications DOD-P-21035A.

Attach door with 4-1/4"Ø zinc plated bolts with countersunk heads. Use double nuts and burr threads after tightening. Attach hasp staple in a similar manner. Leave door in the open position while pouring the bottom slab.

Paint door with zinc rich paint, meeting the above specification after welding.

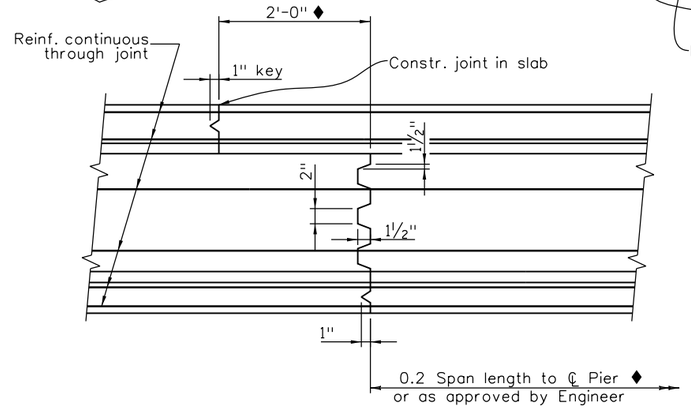

TRANSVERSE WEB CONSTRUCTION JOINT

ACCESS DOOR DETAILS

Door, galv. frame, and hardware to be paid for in Item No. 601 - Concrete Class D.

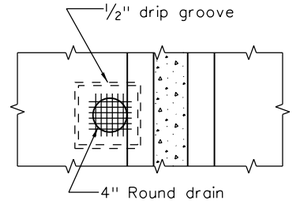

PLAN

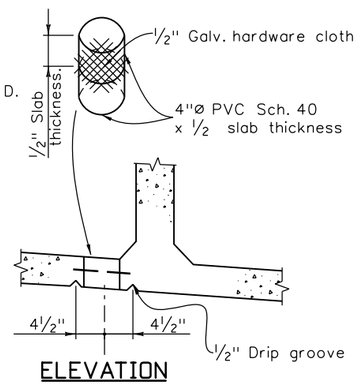

ELEVATION

BOTTOM SLAB DRAIN DETAIL

Locate at low point of each cell.

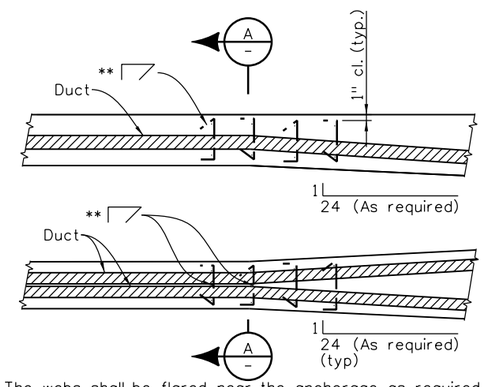

The webs shall be flared near the anchorage as required to maintain a 1 1/2" minimum cover over the ducts and a 1" minimum cover over the stirrups. The flare may be on one side only for exterior girder webs. Provide ** ties above, below, and between each row of ducts, tie to five stirrups at beginning of web flare.

PLAN VIEW OF DUCTS AT GIRDER WEB FLARE

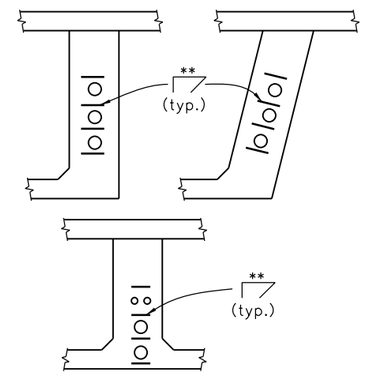

SECTION A

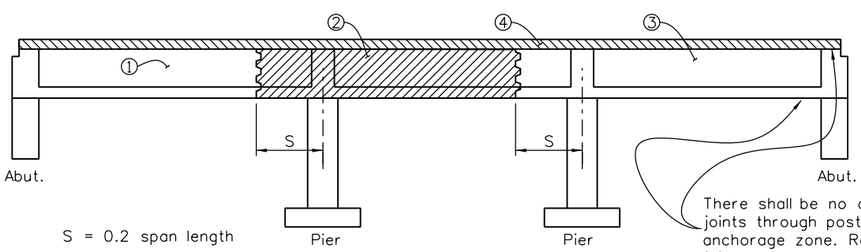

S = 0.2 span length

There shall be no construction joints through post-tensioning anchorage zone. Revise construction joints at abutments as necessary.

SUPERSTRUCTURE PLACING SCHEDULE

Numbers ①, ②, and ③ indicate sequence of placing bottom slab and web concrete when each section constitutes a separate pour. ④ may be placed continuously or in parts, as indicated above and as approved by the Engineer. Contractor may submit an alternate placing schedule to the Engineer for approval.

♦ Except when staged construction requires alternate joint locations.

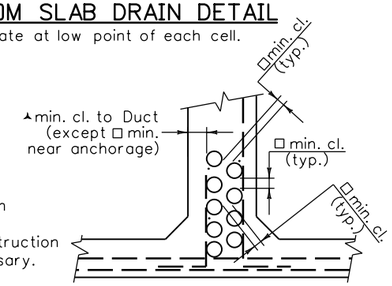

PATTERN 1

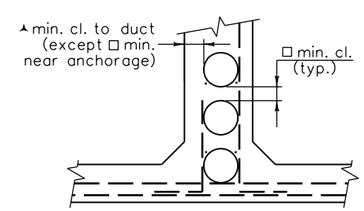

PATTERN 2

CLEARANCE REQUIREMENTS FOR DUCTS

⅄ = 0.75 duct diameter minimum clearance to duct, or 3" min.
□ = 0.44 duct diameter minimum clearance between ducts, or 1 1/2" min.

Designer/Detailer

Jacking force per duct	** No. of stirrups per layer & size	Min. duct Radius*
0 to 308 KIPS	2 - #3	83 ft.
308 to 527 KIPS	4 - #3	142 ft.
527 to 835 KIPS	4 - #4	225 ft.
835 to 1186 KIPS	6 - #4	320 ft.

* For curved webs and ducts greater than 4" diameter use # 3 ** bars @ 14" max. spacing for the full length of curved webs.
For tighter radii than shown a custom duct spacing greater than the □ min. shown and more ** reinforcing must be designed.
See B-618-7

Revision Dates (Preliminary Stage Only)						
8/96	3/99	11/99	5/00	4/02	9/02	3/07	10/13

Quantities		
Quantities By	INITIAL	DATE
Checked By	XXX	MM/YY

Detail		
Detailed By	INITIAL	DATE
Checked By	XXX	MM/YY

Design		
Designed By	INITIAL	DATE
Checked By	XXX	MM/YY

Print Date: $DATE$	
File Name: Sheet_B-618-2.dgn	
Horiz. Scale: NTS	Vert. Scale: As Noted
Staff Bridge Branch - Unit 022X	Unit Leader Initials

Sheet Revisions

Date:	Comments	Init.

Colorado Department of Transportation
4201 East Arkansas Avenue
Room 107
Denver, CO 80222
Phone: 303-757-9309 FAX: 303-757-9197
Staff Bridge Branch

Initials

As Constructed
No Revisions:
Revised:
Void:

CAST-IN-PLACE POST-TENSIONED BOX GIRDER DETAILS

Designer:	XXXXXXXX	Structure Numbers	X-XX-XX
Detailer:	XXXXXXXX		X-XX-XX
Sheet Subset:	BRIDGE	Subset Sheets:	BXX of XXX

Project No./Code
Project Number
Code
Sheet Number

$PLOT_INFO$