SPACING FOR DELINEATOR POSTS ON HORIZONTAL CURVES

'R' RADIUS (FEET)	'D' DEGREE OF CURVE	✳ - ● SPACING ON CURVE (FEET)	✳ SPACING IN ADVANCE OF AND BEYOND CURVE (FEET)		
			FIRST SPACE	SECOND SPACE	THIRD SPACE
20000	0° 17'	300	300	300	300
17000	0° 20'	300	300	300	300
14000	0° 25'	300	300	300	300
12000	0° 29'	300	300	300	300
10000	0° 34'	299	300	300	300
8000	0° 43'	267	300	300	300
6000	0° 57'	231	300	300	300
5000	1° 09'	211	300	300	300
4000	1° 26'	189	300	300	300
3500	1° 38'	176	300	300	300
3000	1° 55'	163	300	300	300
2500	2° 18'	148	297	300	300
2000	2° 52'	132	265	300	300
1800	3° 11'	125	251	300	300
1600	3° 35'	118	236	300	300
1400	4° 06'	110	220	300	300
1200	4° 47'	102	203	300	300
1000	5° 44'	92	185	277	300
900	6° 22'	87	175	262	300
800	7° 10'	82	164	246	300
700	8° 11'	76	153	229	300
600	9° 33'	70	141	211	300
500	11° 28'	64	127	191	300
450	12° 44'	60	120	180	300
400	14° 20'	56	112	168	300
350	16° 22'	52	104	156	300
300	19° 06'	47	95	142	285
250	22° 55'	42	85	127	255
200	28° 39'	37	73	110	220
150	38° 12'	30	60	90	180
100	57° 18'	21	42	64	127
75	76° 24'	20	30	45	90

✳ ON CONVENTIONAL ROADWAYS OMIT THE "THIRD SPACE" AND DOUBLE THE SPACING "ON THE CURVE" AND "IN ADVANCE OF AND BEYOND THE CURVE" (300' MAX.)

● SPACING FOR CURVES NOT SHOWN MAY BE COMPUTED FROM THE FORMULA: $S = 3\sqrt{R-50}$

SPACING IN ADVANCE OF AND BEYOND THE CURVE IS: FIRST SPACE = 2S, SECOND SPACE = 3S AND THIRD SPACE = 6S. SPACES SHOULD NOT BE LESS THAN 20 FT. OR GREATER THAN 300 FT.

RESIDUAL SPACE AFTER "ON CURVE" SPACING IS APPLIED, SHALL BE DIVIDED EQUALLY AMONG ALL OF THE "ON CURVE" SPACES SO THAT THE LAST DELINEATOR FALLS AT THE P.T. OR C.S. OF THE CURVE.

GENERAL NOTES

1. SEE THE TABULATION OF QUANTITIES INCLUDED IN THE PLANS FOR THE NUMBERS AND LOCATIONS OF DELINEATORS REQUIRED.
2. THE COLOR OF DELINEATORS SHALL, IN ALL CASES, CONFORM TO THE COLOR OF EDGE LINES, EXCEPT:
   A. RED, GREEN AND BLUE DELINEATORS
   B. TYPE III DELINEATORS (3 YELLOW).
3. THE COLOR OF DELINEATOR POSTS AND ALL SPECIAL MOUNTING BRACKETS SHALL BE INTERSTATE GREEN.
4. DELINEATORS ARE MANDATORY ON ALL ROADWAYS ON THE STATE HIGHWAY SYSTEM. THEY ARE OPTIONAL WHERE FIXED SOURCE LIGHTING IS IN OPERATION: HOWEVER, ALL CONCRETE BARRIER AND TYPE 3 GUARDRAIL SHALL HAVE REFLECTORS OR SUPPLEMENTAL TABS.
5. TYPE I (YELLOW) DELINEATORS ARE MANDATORY ON THE LEFT SIDE OF EXPRESSWAY ROADWAYS (MEDIAN).
6. RED DELINEATORS MAY BE INSTALLED ON THE REVERSE SIDE OF ANY DELINEATOR AND/OR A SEPARATE POST ON ONE-WAY ROADWAYS OR RAMPS WHERE INVESTIGATION SHOWS A NEED FOR WRONG-WAY MOVEMENT PROTECTION.
7. TYPE III (3-YELLOW) DELINEATORS ARE TO BE INSTALLED TO WARN OF THE EXISTENCE OF OBJECTS NOT ACTUALLY IN THE ROADWAY BUT THAT MAY BE SO CLOSE TO THE EDGE OF THE ROADWAY THAT THEY NEED A MARKER. THESE INCLUDE UNDERPASS PIERS, BRIDGE ABUTMENTS, HANDRAILS, AND CULVERTS HEADS. THE INSIDE EDGE OF THE MARKER SHALL BE IN LINE WITH THE INNER EDGE OF THE OBSTRUCTION.
8. INTERCHANGE RAMPS SHALL BE DELINEATED ON THE RIGHT SIDE, THE LEFT SIDE, OR BOTH SIDES WITH TYPE I DELINEATORS OF THE APPROPRIATE COLOR (CRYSTAL OR YELLOW) AS ILLUSTRATED ON SHEET NUMBER 3.
9. FRONTAGE ROAD DELINEATORS ARE NOT TO BE INSTALLED WHERE THEY MIGHT BE MISLEADING TO MAINLINE TRAFFIC.
10. SPACING OF DELINEATORS FOR TUNNELS AND SNOW SHEDS SHALL BE AS SHOWN ON THE PLANS.
11. WHERE PRACTICABLE, THE APPROACH ENDS OF ISLANDS AND MEDIANS SHOULD BE DELINEATED.
12. TYPICAL INSTALLATION LOCATIONS FOR ALL TYPE I DELINEATORS ON TAGENT SECTIONS SHALL BE ON 1/10TH MILE INTERVALS IN RELATION TO THE HIGHWAY MILE MARKERS. A 200 FOOT MINIMUM WILL APPLY TO THE "LAST SPACE" EXITTING A HORIZONTAL CURVE AND THE FOLLOWING DELINEATOR SHALL BE INSTALLED ON THE NEXT 1/10TH MILE LOCATION (MAXIMUM SPACING IS ALSO 528 FEET). AT ALL OTHER LOCATIONS, SUCH AS A & D LANES, RAMPS, WIDTH TRANSITIONS, AND TURN LANES, A "LAST SPACE" SHOULD NOT BE LESS THAN 50% OF HTE SPACING SHOWN FOR THAT LOCATION.
13. TYPE II DELINEATORS SHALL BE INSTALLED AT 100 FOOT SPACING ON ALL ACCELERATION LANES AND TAPERS, DECELERATION LANES AND TAPERS, AND LANE TRANSITIONS INVOLVING PAVEMENT WIDTH REDUCTIONS IN THE DIRECTION OF TRAFFIC. TYPE II DELINEATORS ARE NOT REQUIRED FOR REDIRECT TAPERS, FOR TRAFFIC MOVING IN THE DIRECTION OF WIDER PAVEMENT OR ON THE SIDE OF THE ROADWAY WHERE THE ALIGNMENT IS NOT AFFECTED BY THE LANE REDUCTION. TYPE II (YELLOW) DELINEATORS SHALL ONLY BE USED WHEN A RAISED OR DEPRESSED MEDIAN IS PRESENT. FOR WIDTH TRANSITIONS WHERE TRAFFIC MOVES IN THE DIRECTION OF WIDER PAVEMENT, THE NORMAL SPACING SHALL BE ADJUSTED SO THERE IS A DELINEATOR AT EACH OF THE ANGLE POINTS OF THE WIDTH TRANSITION.
14. TYPE I DELINEATORS SHALL BE INSTALLED AT 100 FOOT SPACING ON INTERCHANGE RAMP TANGENT SECTION AND BY THE SPACING TABLE ON RAMP CURVES. SPACING "IN ADVANCE OF AND BEYOND CURVE" DOES NOT APPLY TO RAMP CURVES.
15. FOR SPACING ON A CURVE THAT FOLLOWS A TANGENT SECTION WITH SPACES SHORTER THAN THOSE SHOWN IN THE CURVE SPACING TABLE: MODIFY THE TABLE SO THAT THE CURVE SPACING IS NO GREATER THAN THE TANGENT SPACING.
16. WHERE GUARDRAIL INTRUDES INTO THE SPACE BETWEEN THE PAVEMENT EDGE AND THE LINE OF DELINEATORS, PLACE THE DELINEATORS IMMEDIATELY ABOVE OR BEHIND THE RAIL FACE, AND DELINEATOR SPACING SHALL BE THE SAME BEHIND THE RAIL FACE.
17. WHEN NORMAL SPACING FALLS ON AN INTERSECTING ROADWAY, DRIVEWAY, ETC. THE DELINEATOR MAY BE MOVED EITHER DIRECTION A DISTANCE NOT EXCEEDING ONE-QUARTER OF THE NORMAL SPACING.
18. THE ANGULAR PLACEMENT FOR ALL DELINEATORS SHOULD BE BY THE "TRAFFIC ORIENTING" METHOD: AIM THE FACE OF THE DELINEATOR AT THE CENTERLINE OF THE NEAREST LANE OF APPROACHING TRAFFIC AT A POINT 300 FEET AWAY (OR AS DIRECTED BY THE ENGINEER FOR SPECIAL OR LOCATIONS AND CURVES HAVING A DEGREE OF CURVATURE GREATER THAN 6 DEGREES).
19. TYPE III (YELLOW-BLUE-YELLLOW) DELINEATORS ARE TO BE INSTALLED TO WARN OF THE EXISTENCE OF AN ASPHALT CURB INSTALLED BELOW GUARDRAIL. THE DELINEATOR SHALL BE PLACED IN LINE WITH THE ASPHALT CURB.

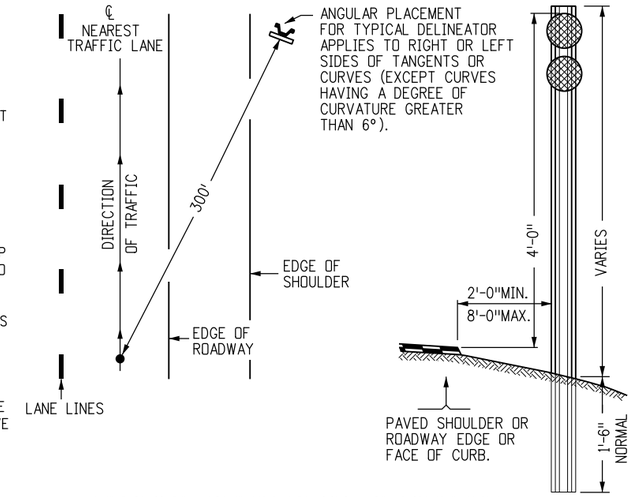

TYPICAL DELINEATOR PLACEMENT

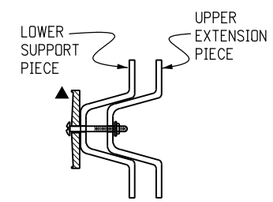

SECTION B-B

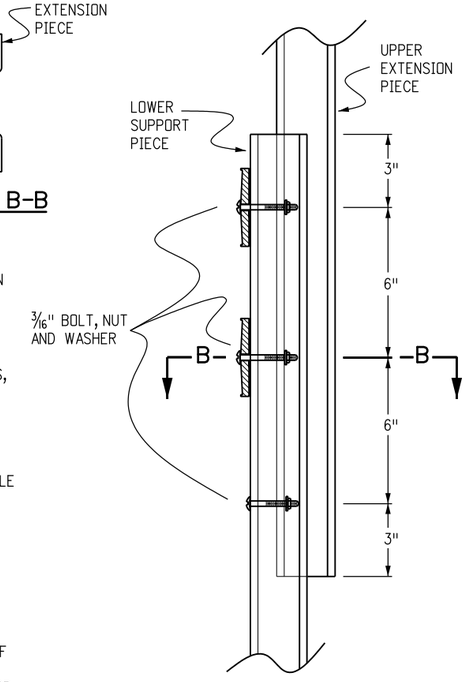

POST NOTES

1. POSTS SHALL BE A UNIFORM FLANGED CHANNEL SECTION (U-SHAPE) MADE FROM HOT ROLLED STRUCTURAL STEEL, RE-ROLLED RAIL STEEL, OR NEW BILLET STEEL, HAVING A MINIMUM YIELD STRENGTH OF 30,000 PSI AND A MINIMUM TENSILE STRENGTH OF 50,000 PSI.
2. POSTS SHALL BE SET IN DRILLED OR EXCAVATED HOLES, PLACED PLUMB AND FIRMLY TAMPED IN PLACE; OR MAY BE DRIVEN PLUMB.
3. A MINIMUM OF 3 HOLES OF 3/16" DIAMETER, SPACED AS SHOWN, ARE REQUIRED FOR ALL DELINEATOR POSTS.

⬢ AN ADDITIONAL HOLE IS REQUIRED WHEN THE ADJUSTABLE REFLECTOR BRACKET IS USED.

DOUBLE HEIGHT POSTS

4. THE LOWER SECTION OF THE 2-POST COMBINATION SHALL BE INSTALLED ACCORDING TO THE SAME PLACEMENT SPECIFICATIONS AS A TYPICAL SINGLE POST INSTALLATION.

▲ 5. REFLECTORS SHALL BE MOUNTED AT THE CONNECTION OF THE POSTS AND AT THE TOP OF THE UPPER POST IN ACCORDANCE WITH THE APPROPRIATE CONFIGURATION FOR THE APPLICATION.

6. THE LENGTH OF THE UPPER EXTENSION PIECE SHALL NOT EXCEED 7 FEET.

TYPICAL DOUBLE HEIGHT INSTALLATION

TYPICAL INSTALLATION SINGLE DIRECTION

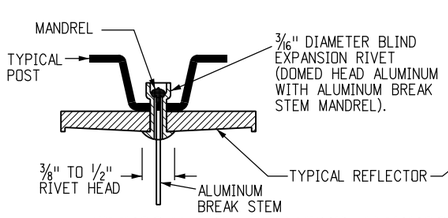

TYPICAL INSTALLATION BACK - TO - BACK

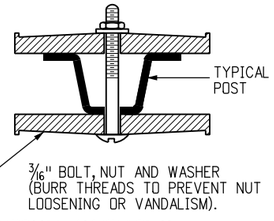

TYPICAL DELINEATOR FABRICATION DETAILS

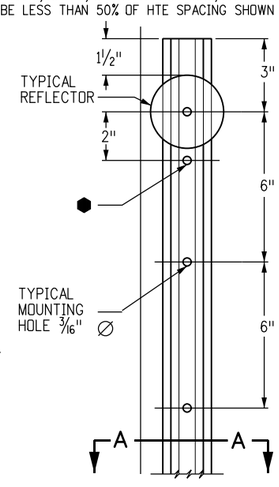

TYPICAL 1,12# DELINEATOR POST

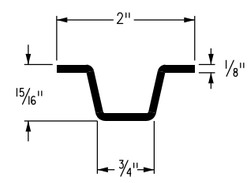

SECTION A-A

ALLOWABLE TOLERANCE DIMENSION:

1" AND UP	± 1/8"
1/2" TO 1"	± 1/16"
1/2" AND BELOW	± 1/32"

WEIGHT:

MINUS 3 1/2% OF THE WEIGHT OF ANY ONE POST.

Computer File Information	
Creation Date: 07/04/12	Initials: KEN
Last Modification Date: 12/01/16	Initials: RPR
Full Path: www.coloradodot.info/library/traffic/traffic-s-standard-plans	
Drawing File Name: S-612-01.dgn	
CAD Ver.: MicroStation V8i Scale: Not to Scale	Units: English

Sheet Revisions	
Date:	Comments
R-1 12/01/2016	UPDATED NOTE 12 AND ADDED NOTE 19

Colorado Department of Transportation
4201 East Arkansas Avenue
Denver, Colorado 80222
Phone: 303-757-9543 FAX: 303-757-9219
Safety & Traffic Engineering KCM

DELINEATOR INSTALLATIONS

Issued By: Safety & Traffic Engineering Branch July 4, 2012

STANDARD PLAN NO.
S-612-1
Sheet No. 1 of 7

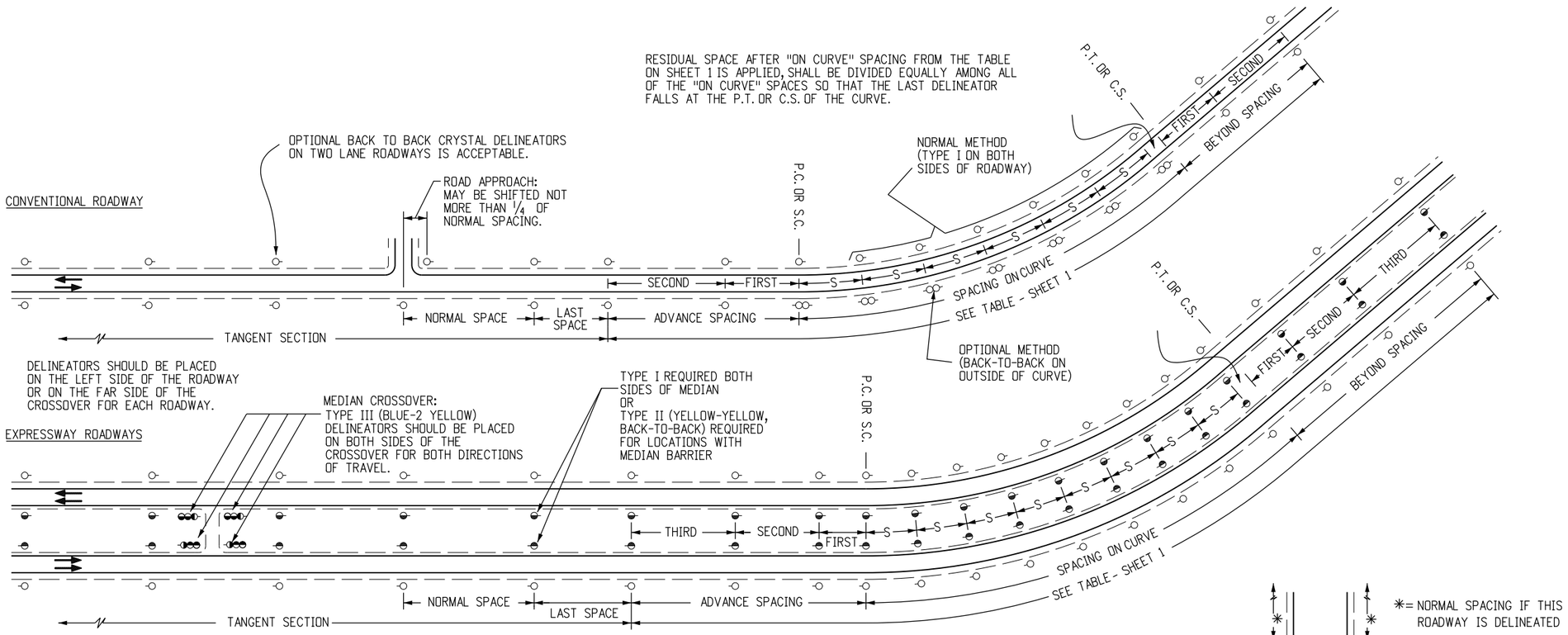

TYPICAL INSTALLATION FOR TANGENT SECTION AND CURVES

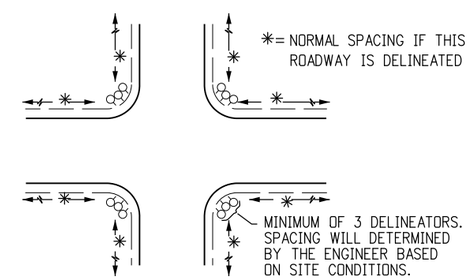

TYPICAL INSTALLATION FOR MINOR INTERSECTION

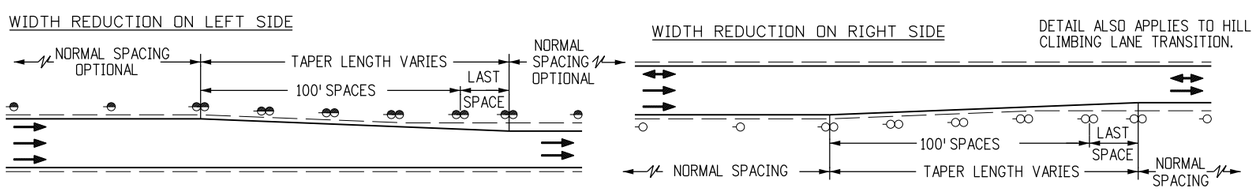

TYPICAL INSTALLATION FOR LANE TRANSITION

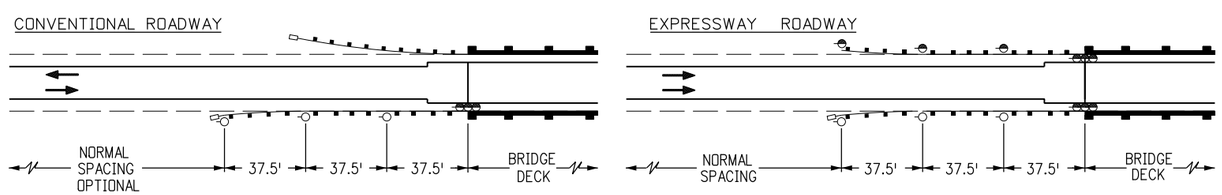

TYPICAL INSTALLATION FOR BRIDGE APPROACHES

DELINEATOR SYMBOLS AND TYPICAL CONFIGURATION

- TYPE I (CRYSTAL)
- TYPE I (YELLOW)
- TYPE I (RED)
- TYPE I (GREEN) (MAINTENANCE MARKER)
- TYPE I (BLUE) (MAINTENANCE MARKER)
- TYPE II (2 CRYSTAL)
- TYPE II (2 YELLOW)
- TYPE II (CRYSTAL-CRYSTAL BACK-TO-BACK)
- TYPE II (YELLOW-YELLOW, BACK-TO-BACK)
- TYPE II (CRYSTAL-RED, BACK-TO-BACK)
- TYPE II (YELLOW-RED, BACK-TO-BACK)
- TYPE III (3 YELLOW)
- TYPE III (2 CRYSTAL-RED, BACK-TO-BACK)
- TYPE III (2 YELLOW-RED, BACK-TO-BACK)
- TYPE III (GREEN)
- TYPE III (BLUE)
- TYPE III (BLUE-2 YELLOW)
- TYPE III (YELLOW-BLUE-YELLOW)

BRIDGE NOTES

1. WHERE CURB TO CURB WIDTH OF BRIDGE IS EQUAL TO OR GREATER THAN ROADWAY WIDTH PLUS USABLE SHOULDER WIDTH, USE THE TYPE III DELINEATOR (3 YELLOW) ONLY AND OMIT ALL THE TYPE I DELINEATORS.
2. FOR GUARD RAIL INSTALLATIONS WHERE APPROACH END IS NOT FLARED, PLACE A TYPE III DELINEATOR (3 YELLOW) IMMEDIATELY IN ADVANCE OF APPROACH END.
3. ALL TYPE I DELINEATORS ARE TO BE MOUNTED ABOVE OR IMMEDIATELY BEHIND GUARD RAIL AND ARE NOT A CONSTANT DISTANCE FROM THE ROADWAY.

Computer File Information	
Creation Date: 07/04/12	Initials: RPR
Last Modification Date: 12/01/2016	Initials: RPR
Full Path: www.coloradodot.info/library/traffic/traffic-s-standard-plans	
Drawing File Name: S-612-01.dgn	
CAD Ver.: MicroStation V8i Scale: Not to Scale	Units: English

	Sheet Revisions	
	Date:	Comments
R-1	12/01/16	ADDED YELLOW-BLUE-YELLOW CRYSTAL

Colorado Department of Transportation
4201 East Arkansas Avenue
Denver, Colorado 80222
Phone: 303-757-9543 FAX: 303-757-9219
Safety & Traffic Engineering KCM

DELINEATOR INSTALLATIONS

Issued By: Safety & Traffic Engineering Branch July 4, 2012

STANDARD PLAN NO.
S-612-1
Sheet No. 2 of 7

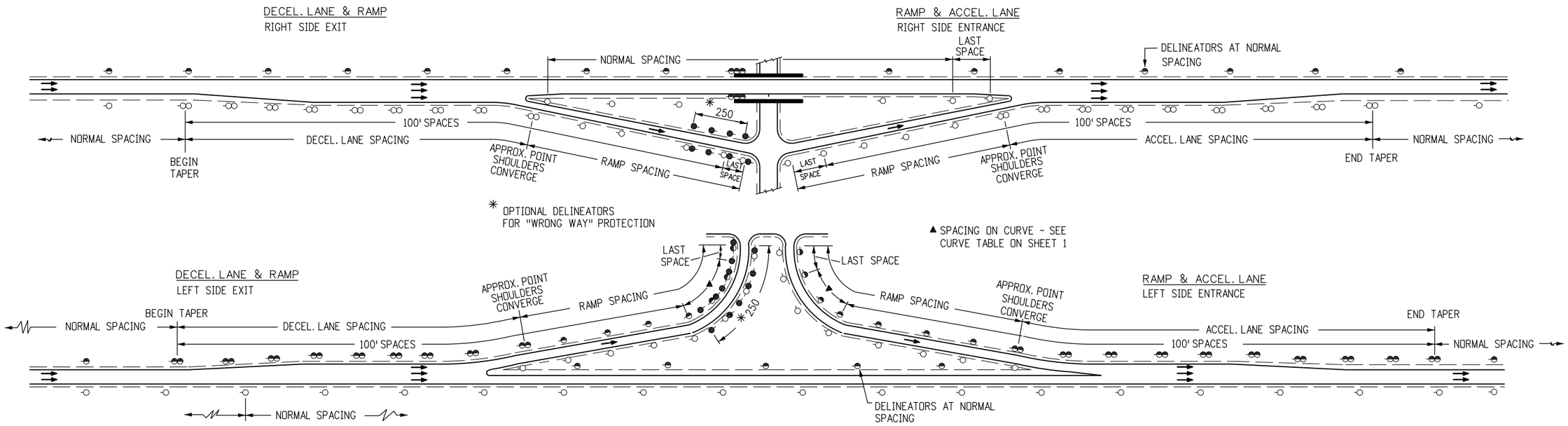

TYPICAL INSTALLATION FOR INTERCHANGES

NOTE

"SPACING IN ADVANCE OF AND BEYOND CURVE" (1ST., 2ND. & 3RD. SPACES) AS SHOWN IN THE SPACING TABLE ON SHEET 1 SHALL NOT APPLY TO RAMP CURVES

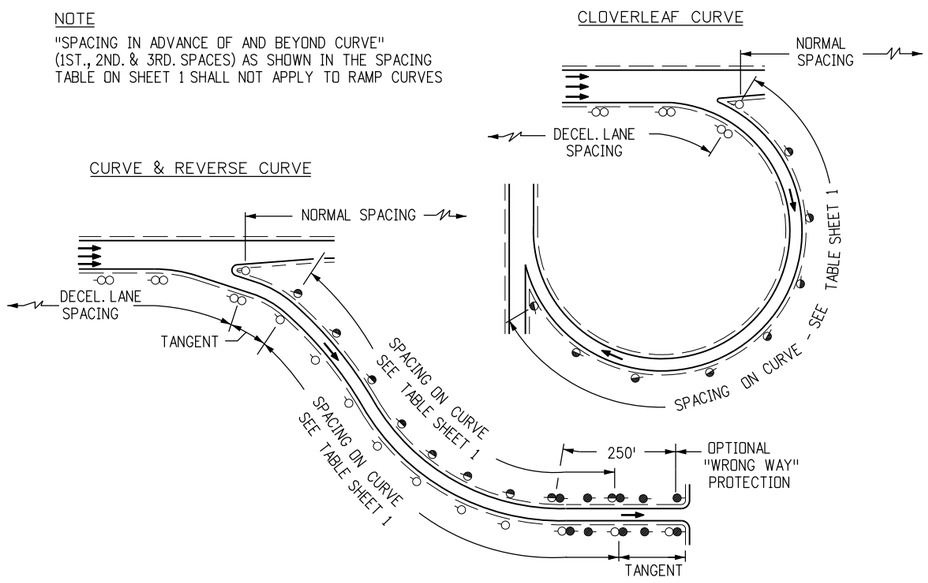

TYPICAL INSTALLATION FOR RAMP CURVES

LEGEND

A = SEE CURVE SPACING TABLE
B = ADVANCE SPACES (FIRST & SECOND)
C = SPACING ON CURVE
D = BEYOND SPACES (FIRST & SECOND)
E = LAST SPACE

NOTE

DELINEATORS MAY BE INSTALLED IF NECESSARY FOR "WRONG WAY" PROTECTION SEE OTHER TYPICAL INSTALLATIONS

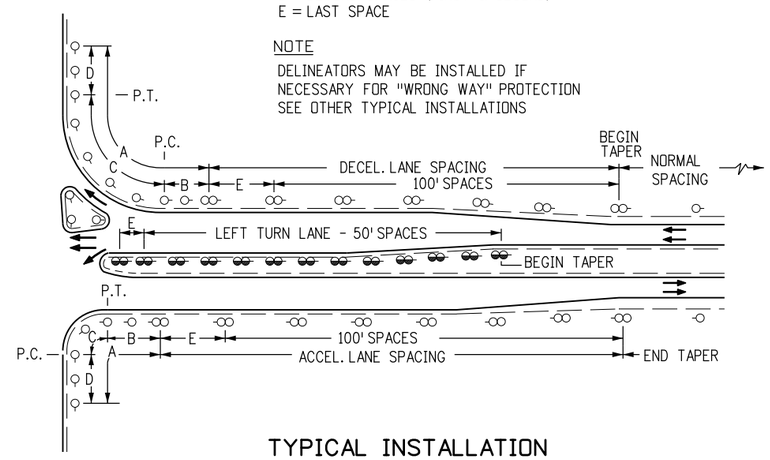

TYPICAL INSTALLATION FOR INTERSECTIONS

WITH ACCEL. & DECEL. LANES

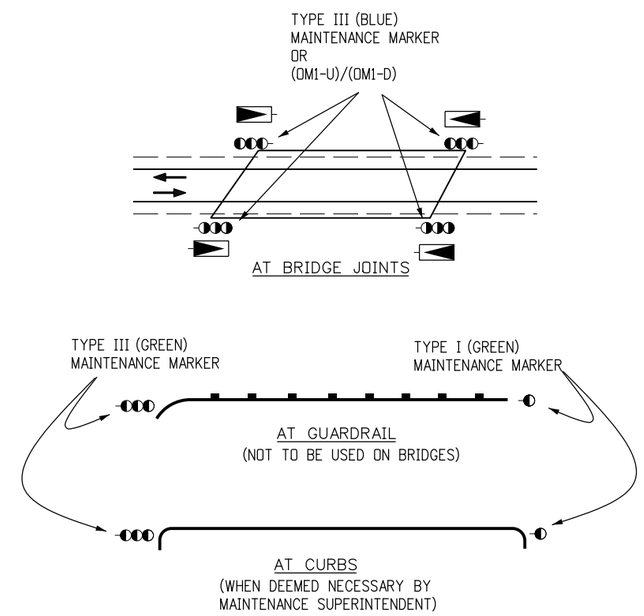

MAINTENANCE MARKER LOCATIONS FOR OBSTRUCTIONS

Computer File Information		
Creation Date: 07/04/12		Initials: RPR
Last Modification Date: 12/01/16	R-1	Initials: NNC
Full Path: www.coloradodot.info/library/traffic/traffic-s-standard-plans		
Drawing File Name: S-612-01.dgn		
CAD Ver.: MicroStation V8i Scale: Not to Scale Units: English		

Sheet Revisions	
Date:	Comments
12/01/16	ADDED BRIDGE JOINT MARKER

Colorado Department of Transportation
4201 East Arkansas Avenue
Denver, Colorado 80222
Phone: 303-757-9543 FAX: 303-757-9219
Safety & Traffic Engineering KCM

DELINEATOR INSTALLATIONS

Issued By: Safety & Traffic Engineering Branch July xx, 2012

STANDARD PLAN NO.
S-612-1
Sheet No. 3 of 7

TYPICAL BARRIER VIEW

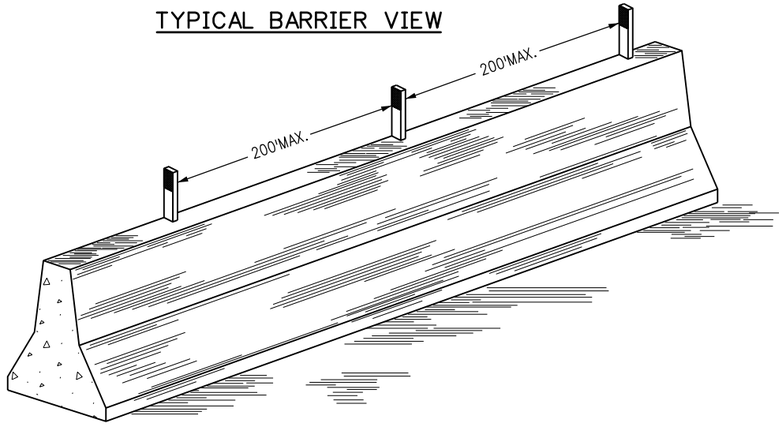

TYPICAL REFLECTOR DETAILS FOR CONCRETE BARRIER

PLAN VIEW

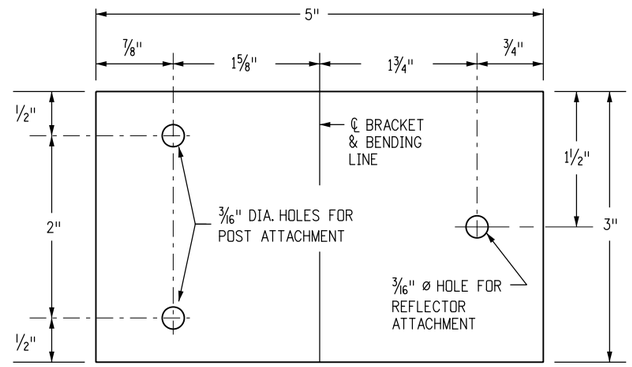

TYPICAL ADJUSTABLE REFLECTOR BRACKET

REFLECTOR TAB

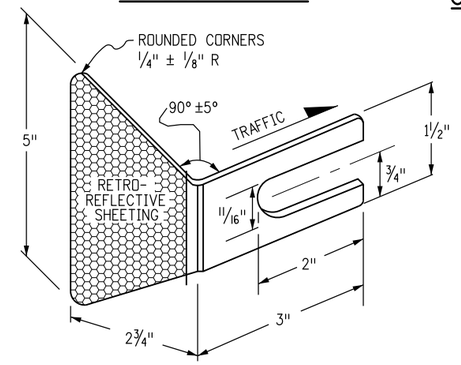

MOUNTING POSITION ON GUARD RAIL TYPE 3

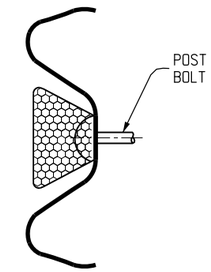

TYPICAL GUARDRAIL REFLECTOR TAB

SEE THE APPROPRIATE GUARDRAIL STANDARD PLANS FOR REFLECTOR TAB FABRICATION AND PLACEMENT DETAILS.

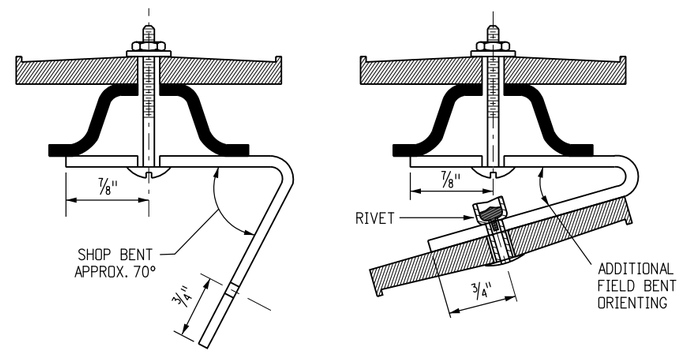

TYPICAL BRACKET FABRICATION DETAILS

BRACKET NOTES

1. THE ADJUSTABLE REFLECTOR BRACKET IS TO BE USED TO "TRAFFIC ORIENT" BACK-TO-BACK DELINEATORS USED ON CURVES.
2. REFLECTOR BRACKETS SHALL BE FABRICATED FROM EITHER GALVANIZED STEEL NOT LESS THAN 16 GAGE, OR ALUMINUM NOT LESS THAN 0.100 INCH THICKNESS.
3. BOLTS, NUTS AND WASHERS SHALL BE GALVANIZED OR CADMIUM PLATED.
4. ALL BRACKET HOLES ARE 3/16 IN. DIAMETER AND DELINEATOR POSTS REQUIRE AN ADDITIONAL HOLE 2 IN. BELOW THE TOP HOLE PROVIDED IN THE POST.
5. SHOP BEND THE BRACKET APPROX. 70 DEGREES AS SHOWN, ATTACH TO THE DELINEATOR POST WITH 3/16 IN. BOLTS AND FIELD BEND AS NECESSARY TO TRAFFIC ORIENT. THEN THE BRACKET REFLECTOR CAN BE ATTACHED WITH A 3/16 IN. BLIND EXPANSION RIVET OR A BOLT.
6. BURR THE THREADS OF ALL BOLTS TO PREVENT NUT LOOSENING OR VANDALISM.

BARRIER REFLECTOR NOTES

1. BARRIER REFLECTORS, REGARDLESS OF TYPE, SHALL MEET THE RETROREFLECTIVE QUALTITIES SPECIFIED IN SECTION 713 OF THE STANDARD SPECIFICATIONS FOR DELINEATOR REFLECTORS, AND BE PAID FOR AS DELINEATOR (TYPE _) (BARRIER) (EACH). USE OF THESE REFLECTORS IS MANDATORY.
2. THE COLOR OF REFLECTIVE SURFACE SHALL MATCH THE COLOR OF THE ADJACENT EDGE LINE.
3. CONCRETE SURFACE PREPARATION, ADHESIVE, AND METHOD OF APPLICATION SHALL BE AS RECOMMENDED BY THE REFLECTOR MANUFACTURER.
4. UNLESS OTHERWISE NOTED IN THE PLANS OR DIRECTED BY THE ENGINEER, A 200 FOOT MAXIMUM TANGENT AND CURVE SPACING APPLIES TO BARRIER REFLECTORS.
5. TOP MOUNT REFLECTORS ARE STANDARD. SIDEMOUNT BARRIER REFLECTORS OR 6 INCH WIDE REFLECTOR STRIPS MAY BE REQUIRED IF SPECIFIED IN THE PLANS.
6. MEDIAN BARRIER REFLECTORS SHALL BE TYPE II (YELLOW-YELLOW, BACK-TO-BACK).
7. FOR A TWO-WAY ROADWAY BARRIER, REFLECTORS SHALL BE TYPE II (CRYSTAL-CRYSTAL, BACK-TO-BACK).
8. FOR TEMPORARY CONCRETE BARRIER, RELFECTORS SHALL BE INSTALLED THAT MEET THE MINIMUM REQUIREMENTS OF STANDARD TYPICAL DELINEATOR INSTALLATIONS, EXCEPT THE MAXIMUM SPACING SHALL BE 50 FT., AND THEY WILL NOT BE PAID FOR, BUT ARE INCLUDED IN THE WORK.

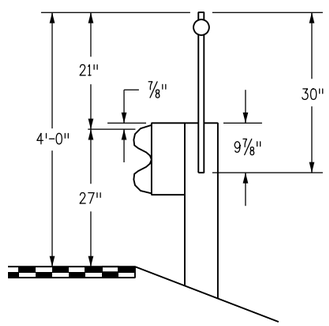

TYPICAL GUARDRAIL POST MOUNT DELINEATORS

POST MOUNT DELINEATORS SHALL BE ATTACHED BY A METHOD APPROVED BY THE ENGINEER OR A METHOD REQUIRED BY THE DEVICE MANUFACTURER.

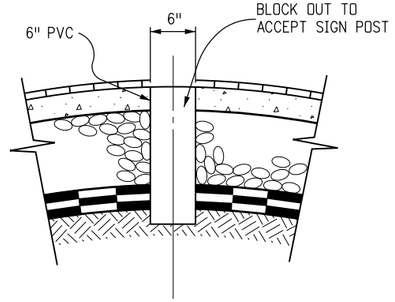

TYPICAL SLEEVE INSTALLATION FOR MEDIAN DELINEATOR POSTS

Computer File Information		Sheet Revisions	
Creation Date: 07/04/12	Initials: RPR	Date:	Comments
Last Modification Date:	Initials:		
Full Path: www.coloradodot.info/library/traffic/traffic-s-standard-plans			
Drawing File Name: S-612-01.dgn			
CAD Ver.: MicroStation V8i Scale: Not to Scale Units: English			

Colorado Department of Transportation
4201 East Arkansas Avenue
Denver, Colorado 80222
Phone: 303-757-9543 FAX: 303-757-9219
Safety & Traffic Engineering KCM

DELINEATOR INSTALLATIONS

Issued By: Safety & Traffic Engineering Branch July 04, 2012

STANDARD PLAN NO.

S-612-1

TYPICAL INSTALLATION DETAIL FOR CONTINUOUS CONCRETE BARRIER

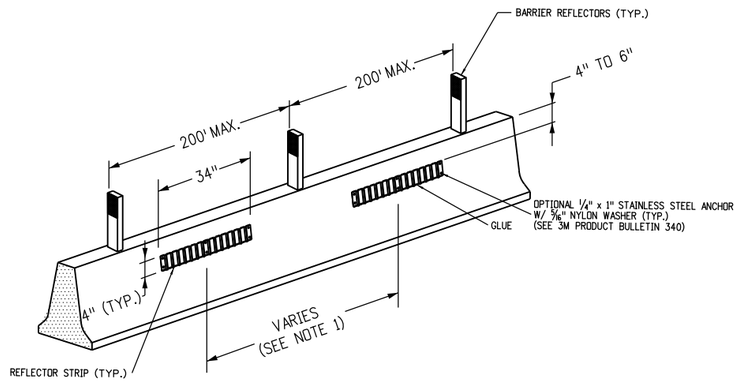

TYPICAL INSTALLATION DETAIL FOR GUARDRAIL TYPE 3

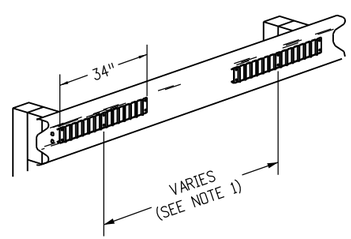

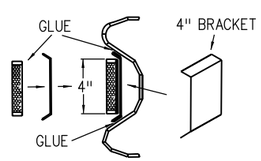

ATTACHMENT DETAILS

TYPICAL REFLECTOR STRIP INSTALLATION

1. REFLECTOR STRIPS SHALL BE SPACED AT INTERVALS OF 20' O.C. FOR TANGENT SECTIONS OF BARRIER AND 10' O.C. FOR CURVED SECTIONS OF BARRIER.
2. THIS DEVICE SHALL BE INSTALLED PER MANUFACTURER'S RECOMMENDATIONS. IT IS THE RESPONSIBILITY OF THE INSTALLER TO CONTACT THE MANUFACTURER REPRESENTATIVE WHENEVER THERE IS A QUESTION REGARDING APPLICATION PROCEDURES OR SUBSTRATE CONDITIONS.
3. THE COLOR OF THE RELECTIVE SURFACE SHALL MATCH THE COLOR OF THE ADJACENT ROADWAY EDGE LINE.
4. AT THE TIME OF INSTALLATION, THE CONTACTING SURFACE SHALL BE DRY AND MOISTURE-FREE.
5. AFTER REFLECTOR STRIP INSTALLATION, SURFACES SHOULD STAY DRY WITHOUT RAIN IN THE FORECAST FOR AT LEASAT 8 HOURS.
6. SURFACE PREPARATION, BRACKETS, BOLTS, AND GLUE (OR EQUIVALENT) SHALL BE INCLUDED IN THE COST OF EACH DELINEATOR STRIP.

CONCRETE BARRIER NOTES

1. CONCRETE SURFACE PREPARATION, ADHESIVE, AND METHOD OF APPLICATION SHALL BE AS RECOMMENDED BY THE REFLECTOR MANUFACTURER.
2. TO ASSUME A STRAIGHT, LEVEL APPLICATION, SNAP A CHALK LINE ACROSS THE BARRIER.
3. FOR MOUNTING THE REFLECTOR STRIP TO CONCRETE BARRIER, INCLUDING THE BRACKETS, THE USE OF 3M WINDO-WELD SUPER FAST URETHANE GLUE OR EQUIVALENT APPLIED AT 60 DEGREES FAHRENHEIT IN DRY WEATHER IS RECOMMENDED. THIS PRODUCT IS AVAILABLE IN A STANDARD CAULKING TUBE AND SHOULD BE APPLIED TO THE BRACKETS AND PANELS WITH A CONSTRUCTION STYLE CAULKING GUN, AND/OR USE 1/4" x 1" STAINLESS STEEL ANCHOR WITH 5/16" NYLON WASHER, AS SPECIFIED IN 3M PRODUCT BULLETIN 340.
4. UNLESS OTHERWISE NOTED IN THE PLANS OR DIRECTED BY THE ENGINEER, A 200-FOOT MAXIMUM TANGENT AND CURVE SPACING APPLIES TO BARRIER REFLECTORS ALONG THE TOP OF THE BARRIER.

GUARDRAIL TYPE 3 NOTES

1. THE USE OF REFLECTOR STRIPS ON GUARDRAIL TYPE 3 IS SUPPLEMENTAL TO THE REFLECTOR TAB.
2. TWO DIFFERENT STYLES OF MOUNTING BRACKETS ARE AVAILABLE. THERE IS ONE TYPE FOR THE 4" REFLECTOR STRIP AND ANOTHER FOR THE 6" REFLECTOR STRIP. THE BRACKETS MUST BE MATCHED TO FIT THE EXACT 4" OR 6" REFLECTOR STRIP PANEL. THE 4" REFLECTOR STRIP SIZE IS TYPICAL, HOWEVER, 1.5" OR 6" REFLECTOR STRIPS MAY BE INSTALLED AS SPECIFIED IN THE PLANS.
3. METAL GUARDRAIL SHALL BE WIRE BRUSHED/SANDED, THEN CLEANED WITH ISOPROPYL ALCOHOL WHERE THE BRACKETS WILL ADHERE TO THE GUARDRAIL.
4. FOR MOUNTING THE REFLECTOR STRIP TO GUARDRAIL, INCLUDING THE BRACKETS, THE USE OF 3M WINDO-WELD SUPER FAST URETHANE GLUE OR EQUIVALENT APPLIED AT 60 DEGREES FAHRENHEIT IN DRY WEATHER IS RECOMMENDED. THIS PRODUCT IS AVAILABLE IN A STANDARD CAULKING TUBE AND SHOULD BE APPLIED TO THE BRACKETS AND PANELS WITH A CONSTRUCTION STYLE CAULKING GUN, AND/OR USE 1#4" x 1" STAINLESS STEEL ANCHOR WITH 5#16" NYLON WASHER, AS SPECIFIED IN 3M PRODUCT BULLETIN 340.
5. INSTALLATION REQUIRES THE USE OF THREE BRACKETS (MIN.) PER REFLECTOR STRIP CORRESPONDING TO THE PRE-DRILL REFLECTOR STRIP HOLES.

Computer File Information	
Creation Date: 07/04/12	Initials: RPR
Last Modification Date: 12/01/16	Initials: TCD
Full Path: www.coloradodot.info/library/traffic/traffic-s-standard-plans	
Drawing File Name: S-612-01.dgn	
CAD Ver.: MicroStation V8i Scale: Not to Scale	Units: English

	Sheet Revisions	
	Date:	Comments
R-1	12/01/16	ADDED SPACING REQUIREMENTS DELETED 6" REFLECTOR STRIP

Colorado Department of Transportation
4201 East Arkansas Avenue
Denver, Colorado 80222
Phone: 303-757-9543 FAX: 303-757-9219
Safety & Traffic Engineering KCM

DELINEATOR INSTALLATIONS

Issued By: Safety & Traffic Engineering Branch July 04, 2012

STANDARD PLAN NO.

S-612-1

Sheet No. 5 of 7

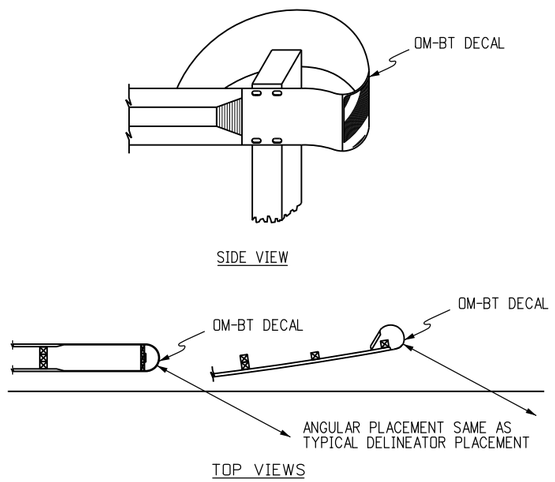

BUFFER TERMINALS (BT)

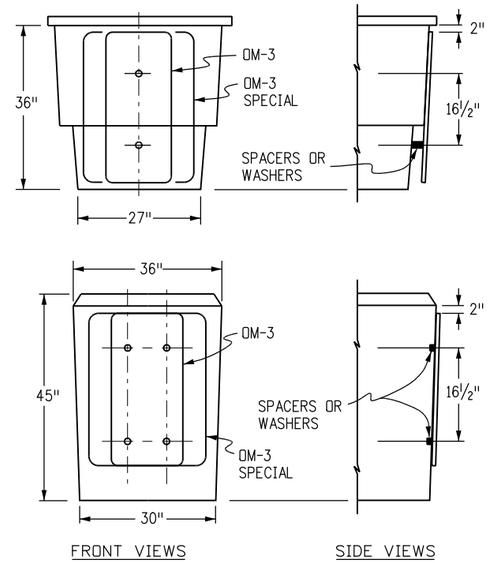

IMPACT ATTENUATOR (SAND FILLED)

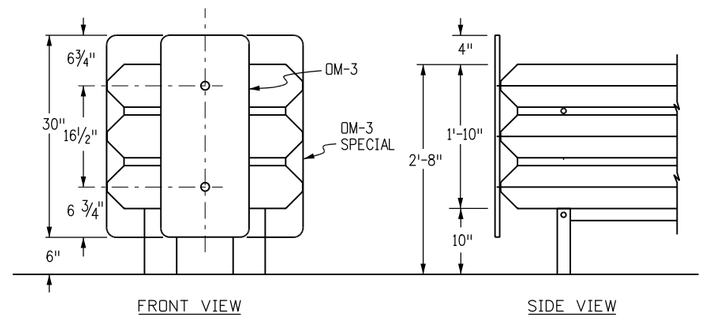

IMPACT ATTENUATOR (MODULAR)

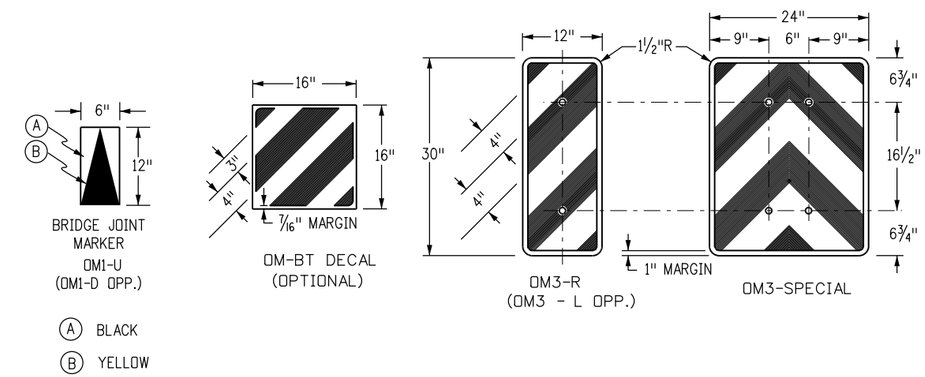

SUPPLEMENTAL DELINEATION DETAILS

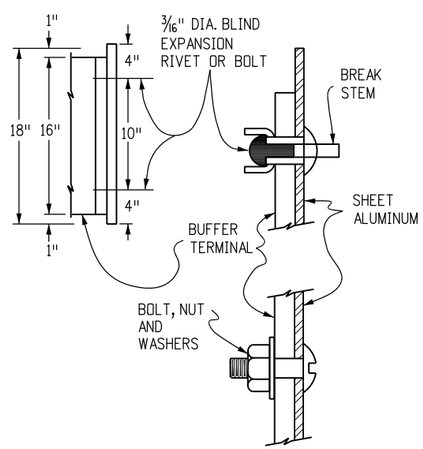

BUFFER PANEL ATTACHMENT DETAILS

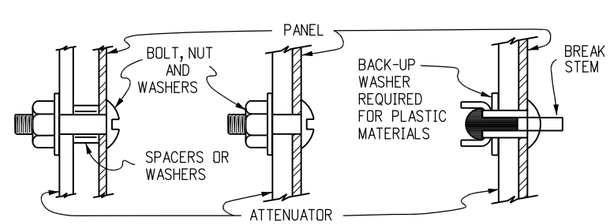

ATTENUATOR PANEL ATTACHMENT DETAILS

SUPPLEMENTAL PANEL NOTES

1. ALL SUPPLEMENTAL DELINEATION PANELS SHALL BE SINGLE SHEET ALUMINUM, 0.080" MINIMUM THICKNESS.
2. A) PANELS SHALL BE FASTENED DIRECTLY TO THE IMPACT ATTENUATOR WITH 2 OR 4-3/16 IN. DIA. BLIND EXPANSION RIVETS, OR 2 OR 4-3/16 IN. BOLTS, NUTS AND WASHERS.

   B) EXPANSION RIVETS SHALL BE DOMED HEAD ALUMINUM WITH ALUMINUM BREAK STEM MANDREL, AND SHALL HAVE A BACK-UP WASHER WHEN USED WITH PLASTIC MATERIALS.

   C) BOLTS, NUTS AND WASHERS SHALL BE GALVANIZED OR CADMIUM PLATED.

   D) SPACERS, OR SPACING WASHERS SHALL BE USED AS NECESSARY FOR SAND FILLED ATTENUATORS.
3. OM-BT DECAL (BUFFER TERMINAL OBJECT MARKER) SHALL BE PRESSURE SENSITIVE REFLECTIVE SHEETING AND SHALL BE APPLIED DIRECTLY TO THE GUARDRAIL END TREATMENT (FLARED OR NON-FLARED).
4. RETROREFLECTIVE SHEETING SHALL CONFORM TO ASTM D4956, TYPE III. THE SHEETING SHALL BE YELLOW FOR PERMANENT INSTALLATIONS.

   OM-BT DECAL AND OM-3 PANELS SHALL HAVE YELLOW SHEETING BACKGROUND WITH STENCIL BLACK STRIPES.

   THE SHEETING FOR TEMPORARY (CONSTRUCTION ZONE) INSTALLATIONS SHALL BE AS FOLLOWS:

   OM-BT DECAL AND OM-3 PANELS SHALL HAVE ALTERNATING ORANGE AND WHITE REFLECTORIZED STRIPES.
5. SUPPLEMENTAL DELINEATION PANELS OR PRESSURE SENSITIVE RETROREFLECTIVE SHEETING DECALS SHALL BE INCLUDED IN THE COST OF THE GUARDRAIL END ANCHOR OR THE IMPACT ATTENUATOR ITEM.
6. REFERENCE SHEET S-612-1 SHEET 7 OF FOR BASE DETAIL

SUPPLEMENTAL DELINEATION FOR GUARD RAIL
BUFFER TERMINALS AND IMPACT ATTENUATORS

Computer File Information		
Creation Date: 07/04/12	Initials: RPR	
Last Modification Date: 12/01/16	Initials: NNC	R-1
Full Path: www.coloradodot.info/library/traffic/traffic-s-standard-plans		
Drawing File Name: S-612-01.dgn		
CAD Ver.: MicroStation V8i Scale: Not to Scale	Units: English	

Sheet Revisions	
Date:	Comments
12/01/16	ADDED BRIDGE JOINT MARKER

Colorado Department of Transportation
4201 East Arkansas Avenue
Denver, Colorado 80222
Phone: 303-757-9543 FAX: 303-757-9219
Safety & Traffic Engineering KCM

DELINEATOR INSTALLATIONS

Issued By: Safety & Traffic Engineering Branch July 4, 2012

STANDARD PLAN NO.
S-612-1
Sheet No. 6 of 7

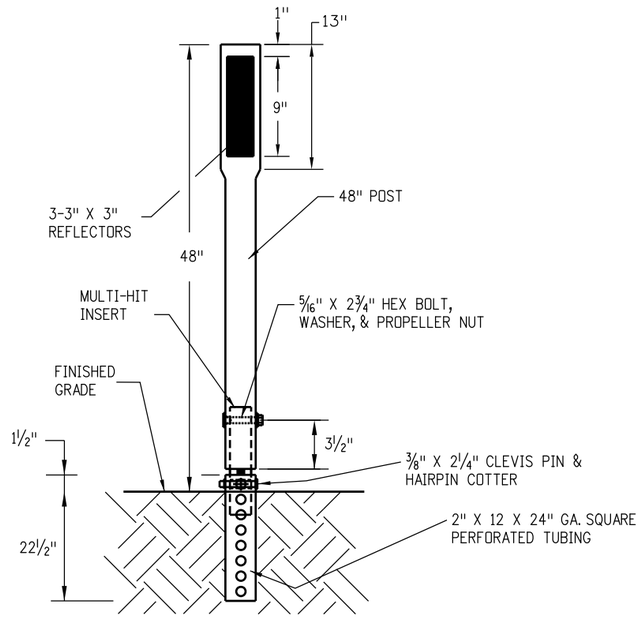

TYPICAL CONDITIONS

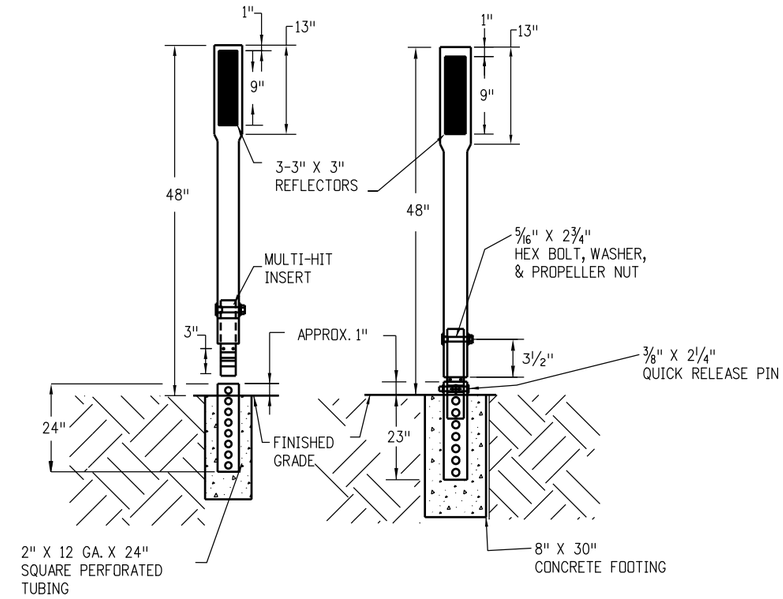

SOFT SOIL CONDITIONS

DRIVEABLE METHOD

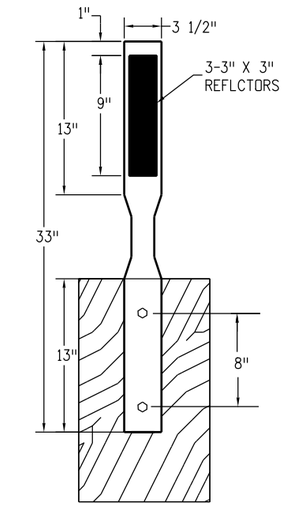

POST MOUNTED

GUARDRAIL MOUNTED

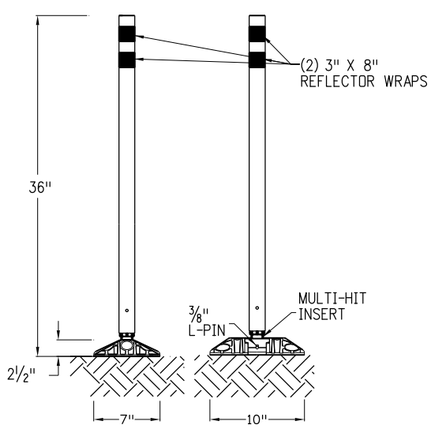

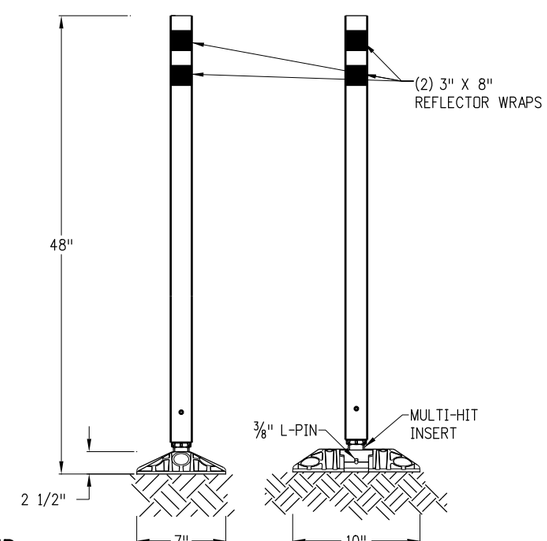

SURFACE MOUNTED

GENERAL NOTES

1. FLEXIBLE,33", IMPACT RESISTANT, DELINEATOR POSTS, COMPRISED OF RUBBER COMPOSITE, INCLUDING, 80% BY VOLUME, POST COMSUMER RECYLED HDPE, WITH AN INTERSTATE GREEN, PREMIUM U.V. INHIBITED, CO-EXTRUDED HDTP SHELL.
2. THE TOP OF TUBULAR POSTS SHALL BE PERMANENTLY CLOSED TO PREVENT MOISTURE OR DEBRIS FROM ENTERING.
3. THE SIDE OF THE POST FACING TRAFFIC, UPON WHICH THE DELINEATOR IS TO BE MOUNTED. SHALL HAVE A FLAT SURFACE WITH MINIMUM DIMENSIONS OF 3.25 INCHES IN WIDTH BY 13 INCHES IN LENGTH. THE TEXTURE OF THE PROJECTED SURFACE SHALL BE SMOOTH AND SUITABLE FOR THE ADHERENCE OF REFLECTIVE SHEETING WITHOUT PREPARATION OTHER THAN WIPING WITH A CLEAN CLOTH DAMPENED WITH MINERAL SPIRITS TO REMOVE OIL-TYPE CONTAMINANTS.
4. THE BOTTOM OF THE POST SHALL HAVE A MINIMUM 13 INCH LENGTH FLAT MOUNTING SURFACE WITH MINIMUM DIMENSION OF 3 1/4 INCHES IN WIDTH.
5. THE WIDTH OF THE POST AT ANY POINT (EXCLUDING THE BASE, IF ANY) SHALL BE A MAXIMUM OF 4 1/8 INCHES.
6. THE OUTSIDE DIAMETER OF THE TUBULAR POST SHALL BE A MAXIMUM OF 2 3/8 INCHES.

Computer File Information		
Creation Date: 07/04/12	Initials: RPR	
Last Modification Date: 12/01/2016	Initials: RPR	R-1
Full Path: www.coloradodot.info/library/traffic/traffic-s-standard-plans		
Drawing File Name: S-612-01.dgn		
CAD Ver.: MicroStation V8i Scale: Not to Scale Units: English		

Sheet Revisions	
Date:	Comments
12/01/2016	REMOVED "SHURFLEX" FROM DETAIL AND UPDATED "INTERSTATE GREEN" TO NOTE 1

Colorado Department of Transportation
4201 East Arkansas Avenue
Denver, Colorado 80222
Phone: 303-757-9543 FAX: 303-757-9219
Safety & Traffic Engineering KCM

DELINEATOR INSTALLATIONS

Issued By: Safety & Traffic Engineering Branch July 4, 2012

STANDARD PLAN NO.

S-612-1

Sheet No. 7 of 7