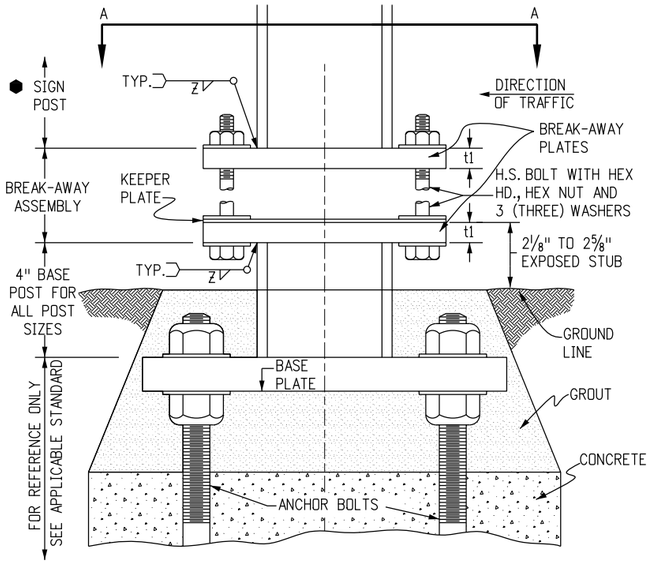

TYPICAL ELEVATION STEEL POST ASSEMBLY

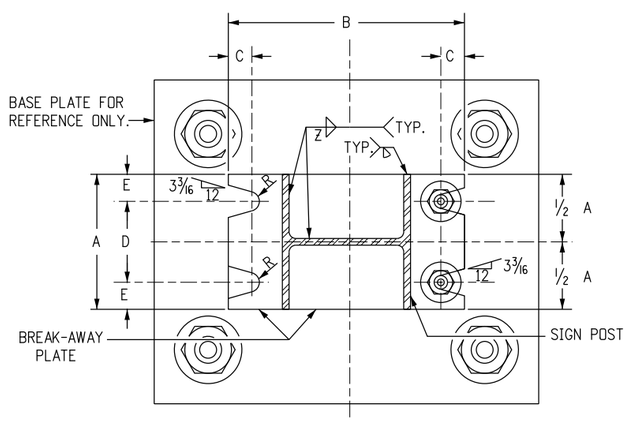

SECTION A-A

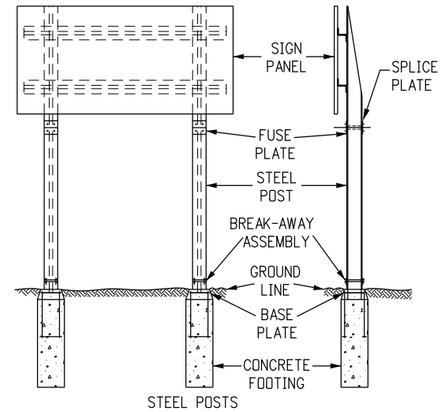

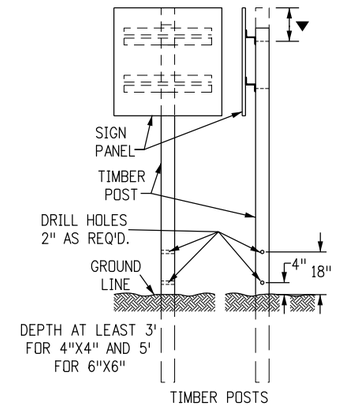

TYPICAL BREAK-AWAY SIGN SUPPORT INSTALLATIONS

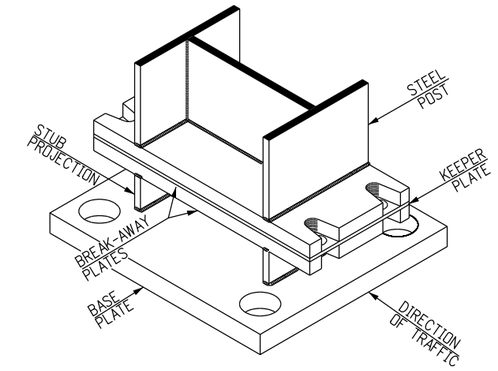

TYPICAL PROJECTED VIEW STEEL POST ASSEMBLY

GENERAL NOTES

1. DESIGN CONFORMS WITH AASHTO "SPECIFICATIONS FOR THE DESIGN AND CONSTRUCTION OF STRUCTURAL SUPPORTS FOR HIGHWAY SIGNS".
2. ALL STRUCTURAL STEEL SHALL CONFORM TO AASHTO M270 (ASTM A709) GRADE 36 AND SECTIONS 509 AND 614 OF THE STANDARD SPECIFICATIONS.
3. STEEL FUSE PLATES AND SPLICE PLATES SHALL CONFORM TO AASHTO M270 (ASTM A709) GRADE 36.
4. ALL STRUCTURAL STEEL INCLUDING FUSE AND SPLICE PLATES SHALL BE GALVANIZED IN ACCORDANCE WITH ASTM A123 AFTER FABRICATION. STEEL POSTS SHALL BE STAMPED WITH THEIR SIZE.
5. ALL HIGH STRENGTH BOLTS, NUTS AND WASHERS SHALL CONFORM TO ASTM-A325. WASHERS USED IN THE BREAK-AWAY PLATE AND FUSE PLATE ASSEMBLIES SHALL BE OF SUFFICIENT STRENGTH TO PREVENT ANY DEFLECTION OR CUPPING INTO THE SLOTTED GROOVES UNDER BOLT TORQUING.
6. ALL BOLTS, NUTS, AND WASHERS SHALL BE GALVANIZED AS PER ASTM-A153 OR ASTM-A164.
7. ALL HOLES IN FUSE PLATE AND POST FLANGE ON WHICH IT MOUNTS, SHALL BE DRILLED. ALL OTHERS MAY BE DRILLED OR SUB-PUNCHED AND REAMED.
8. ALL STEEL CUTS SHALL PREFERABLY BE SAW CUTS; HOWEVER, FLAME CUTTING WILL BE PERMITTED PROVIDED ALL EDGES ARE GROUND. REMOVE ALL BURRS. METAL SHALL NOT PROJECT BEYOND THE PLANE OF THE PLATE FACE.
9. A "KEEPER PLATE" OF 28-GAGE GALVANIZED SHEET METAL, FABRICATED TO MATCH BREAK-AWAY PLATE DIMENSIONS BUT WITH HOLES RATHER THAN SLOTS, SHALL BE USED TO PREVENT BOLT LOOSENING DUE TO WIND VIBRATION.
10. HIGH STRENGTH BOLTS IN THE BREAK-AWAY ASSEMBLY SHALL BE TIGHTENED ONLY TO THE TORQUE SHOWN IN THE TABLE. DO NOT OVERTIGHTEN.
11. TIMBER POSTS SHALL BE IN ACCORDANCE WITH SECTION 614 OF THE STANDARD SPECIFICATIONS AS TO SIZE, ALTERNATE SIZE, GRADE, SPECIES, TREAMENT, AND BREAK-AWAY.
12. FOR ALL BASE PLATE AND FOOTING WORK SEE STANDARD PLAN S-614-6.
13. FOR ADDITIONAL INFORMATION, REFER TO "TABULATION OF SIGNS" AND CROSS SECTIONS FOR CLASS III SIGNS" INCLUDED IN THE PLANS.
14. ▼ TIMBER POST SHALL BE FLUSH WITH TOP OF SIGN PANEL FOR DIRECT MOUNT AND 3-3/16" MINIMUM ABOVE BOLT FOR BACKING ZEE MOUNT.
15. TIMBER SIGN POST MAY ONLY BE USED FOR TEMPORARY SIGNAGE DURING CONSTRUCTION. TUBULAR STEEL SHALL BE USED FOR PERMANENT INSTALLATIONS.
16. IN NO CASE SHALL A BACKING ZEE BE PLACED BELOW THE FUSE PLATES.
17. SIGN POST PAY LENGTH IS FROM THE UPPER BREAK-AWAY PLATE TO THE TOP OF THE "COPE". THE 4-INCH "BASE POST" AND THE LOWER "BREAK-AWAY PLATE" ARE PAID FOR AS PART OF THE FOOTING. THE UPPER "BREAK-AWAY PLATE" AND ALL NUTS, BOLTS, WASHERS AND KEEPER PLATE FOR FASTENING THE BREAK-AWAY PLATES ARE PAID FOR AS A PART OF THE POST.

BOLTING PROCEDURE FOR BREAK-AWAY PLATE ASSEMBLY

1. ASSEMBLE THE POST TO THE STUB WITH BOLTS, WITH ONE FLAT WASHER ON THE TOP OF THE UPPER BREAK-AWAY PLATE AND ONE BELOW THE LOWER BREAK-AWAY PLATE, AND ONE FLAT WASHER AND A KEEPER PLATE BETWEEN THE BREAK-AWAY PLATES.
2. TIGHTEN ALL BOLTS TO A "SNUG TIGHT" CONDITION WITH A 12 IN. TO 15 IN. WRENCH, TO BED THE WASHERS AND CLEAN THE BOLT THREADS. THEN LOOSEN EACH BOLT IN TURN, AND RETIGHTEN IN A SYSTEMATIC ORDER TO THE PRESCRIBED TORQUE (SEE BREAK-AWAY PLATE DATA TABLES).
3. BURR THREADS AT JUNCTION WITH NUT TO PREVENT NUT LOOSENING.

BREAK-AWAY PLATE DATA TABLE

DIMENSION / POST SIZE	BOLT SIZE AND TORQUE	A	B	C	D	E	t1	WELD Z	R
W 12 X 26	3/4"ø X 3 3/4" 46 Ft. Lb.	6 1/2"	17"	7/8"	3 1/2"	1 1/2"	1"	5/16"	13/32"
W 10 X 26		5 3/4"	14 7/8"	7/8"	3 1/4"	1 1/4"	1"	5/16"	13/32"
W 10 X 22		5 3/4"	14 5/8"	7/8"	3 1/4"	1 1/4"	1"	5/16"	13/32"
W 8 X 21		5 1/4"	12 5/8"	7/8"	2 3/4"	1 1/4"	1"	5/16"	13/32"
W 8 X 18	5/8"ø X 3" 29 Ft. Lb.	5 1/4"	12"	3/4"	3"	1 1/8"	3/4"	1/4"	11/32"
W 6 X 15		6"	10"	3/4"	3 3/4"	1 1/8"	3/4"	1/4"	11/32"
W 6 X 12		5"	10"	3/4"	2 3/4"	1 1/8"	3/4"	1/4"	11/32"

Computer File Information	
Creation Date: 07/04/12	Initials: SCL
Last Modification Date: 02/08/2017	Initials: DiNardo
Full Path: www.coloradodot.info/library/traffic/traffic-s-standard-plans	
Drawing File Name: S-614-05_1of2.dgn	
CAD Ver.: MicroStation V8 Scale: Not to Scale	Units: English

	Sheet Revisions	
	Date:	Comments
R-1	02/08/17	Rev. Dimension D in Table for W10 Posts

Colorado Department of Transportation
4201 East Arkansas Avenue
Denver, Colorado 80222
Phone: 303-757-9543 FAX: 303-757-9219
Safety & Traffic Engineering KCM

BREAK-AWAY SIGN SUPPORT DETAILS FOR GROUND SIGNS

Issued By: Safety & Traffic Engineering Branch July 4, 2012

STANDARD PLAN NO.

S-614-5

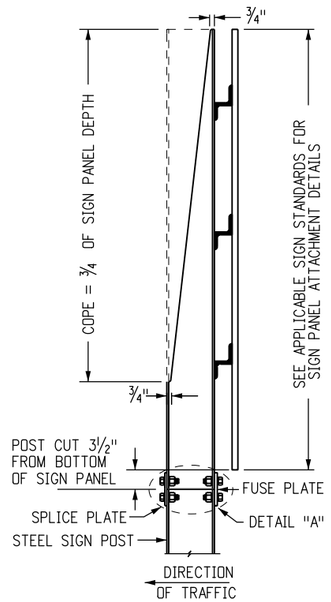

TYPICAL SIDE VIEW
FUSE PLATE AND POST COPE

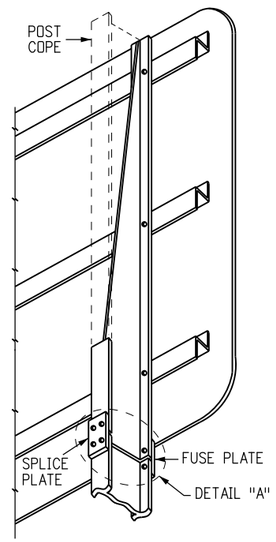

TYPICAL PROJECTED VIEW
FUSE PLATE AND POST COPE

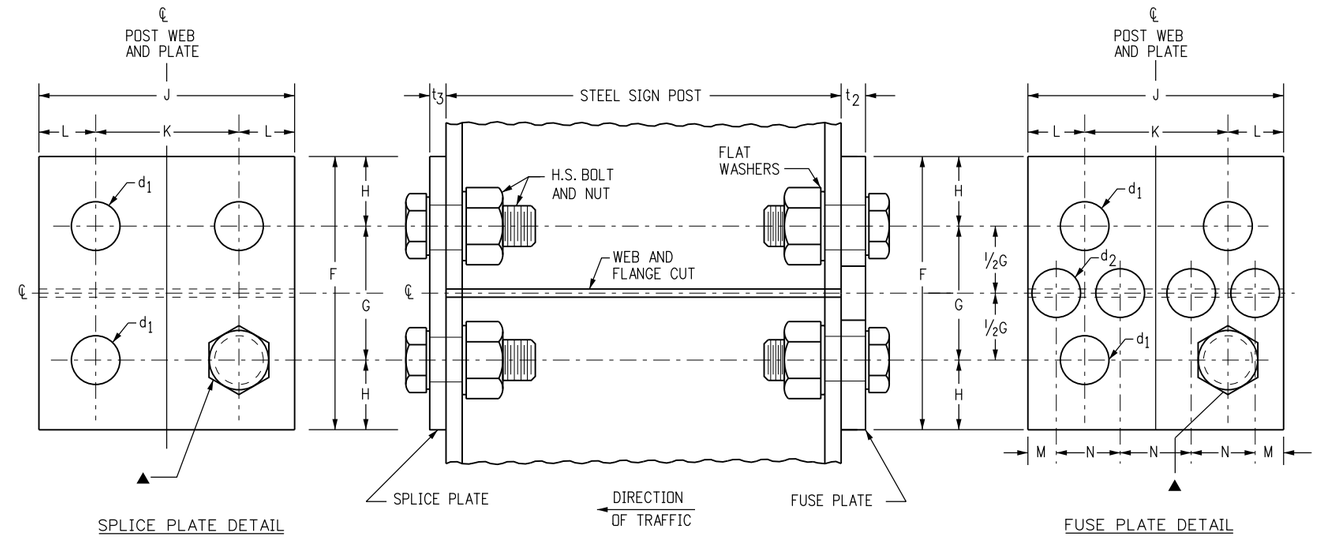

▲ HOLE DIAMETER = d_1
USE HIGH STRENGTH BOLTS WITH HEX HEAD AND HEX NUT, WITH ONE FLAT WASHER UNDER EACH

TYPICAL FUSE AND SPLICE PLATE HINGE DETAILS

FUSE AND SPLICE PLATE HINGE DATA TABLE

SIZE / POST	F	G	H	J	K	L	M	N	d_1	d_2	t_2	t_3	BOLT SIZE	FABRICATION NOTES
W 12 X 26	6"	3"	1 1/2"	6 1/2"	3 1/2"	1 1/2"	13/16"	1 5/8"	13/16"	1 5/16"	1/2"	7/16"	3/4" ØX 2 1/2"	ALL HOLES IN FUSE PLATE AND POST FLANGE HOLES ON WHICH IT MOUNTS SHALL BE DRILLED. ALL OTHERS MAY BE PUNCHED. BURR THREADS AT JUNCTION WITH NUT TO PREVENT NUT LOOSENING. ASTM-A441, ASTM-572 GRADE 50, OR ASTM-A588 MAY BE SUBSTITUTED FOR AASHTO M270 (ASTM A709) GRADE 36 AT THE OPTION OF THE FABRICATOR. STEEL USED SHALL HAVE AN ULTIMATE TENSILE STRENGTH NOT TO EXCEED 80 KSI.
W 10 X 26	6"	3"	1 1/2"	5 3/4"	2 3/4"	1 1/2"	13/16"	1 3/8"	13/16"	1 1/8"	1/2"	7/16"	3/4" ØX 2 1/2"	
W 10 X 22	6"	3"	1 1/2"	5 3/4"	2 3/4"	1 1/2"	13/16"	1 3/8"	13/16"	1 1/8"	1/2"	3/8"	3/4" ØX 2 1/2"	
W 8 X 21	5 1/2"	2 1/2"	1 1/2"	5 1/4"	2 3/4"	1 1/4"	3/4"	1 1/4"	13/16"	1"	1/2"	3/8"	3/4" ØX 2 1/2"	
W 8 X 18	5"	2 1/2"	1 1/4"	5 1/4"	2 3/4"	1 1/4"	3/4"	1 1/4"	11/16"	1 1/16"	3/8"	3/8"	5/8" ØX 2 1/2"	
W 6 X 15	5"	2 1/2"	1 1/4"	6"	3 1/2"	1 1/4"	3/4"	1 1/2"	11/16"	1 1/4"	3/8"	1/4"	5/8" ØX 2 1/2"	
W 6 X 12	4 1/4"	2"	1 1/8"	4"	2 1/4"	7/8"	1/2"	1"	9/16"	3/4"	1/4"	1/4"	1/2" ØX 1 3/4"	

Computer File Information	
Creation Date: 07/04/12	Initials: SCL
Last Modification Date:	Initials:
Full Path: www.coloradodot.info/library/traffic/traffic-s-standard-plans	
Drawing File Name: S-614-05_2of2.dgn	
CAD Ver.: MicroStation V8 Scale: Not to Scale	Units: English

Sheet Revisions	
Date:	Comments

Colorado Department of Transportation
4201 East Arkansas Avenue
Denver, Colorado 80222
Phone: 303-757-9543 FAX: 303-757-9219
Safety & Traffic Engineering KCM

BREAK-AWAY SIGN SUPPORT DETAILS FOR GROUND SIGNS

Issued By: Safety & Traffic Engineering Branch July 4, 2012

STANDARD PLAN NO.
S-614-5
Sheet No. 2 of 2