GENERAL NOTES

1. ALL STRUCTURAL STEEL SHALL CONFORM TO THE REQUIREMENTS SHOWN IN THE MATERIALS TABLE ON SHEET 2.
2. HIGH-STRENGTH BOLTED CONNECTIONS SHALL CONFORM TO THE PROVISIONS IN SECTION 509.28 OF THE STANDARD SPECIFICATIONS. ASSEMBLY OF HIGH-STRENGTH BOLTED CONNECTIONS FOR SIGN STRUCTURES MAY BE MADE WITH GALVANIZING OR PAINT ON THE CONTACT (FAYING) SURFACES.
3. ALL SIGN STRUCTURES SHALL BE FABRICATED INTO THE LARGEST PRACTICAL SECTIONS PRIOR TO GALVANIZING. SPLICE LOCATIONS SHALL BE SUBMITTED TO THE ENGINEER FOR APPROVAL AND THE CONTRACTOR SHALL NOT COMMENCE FABRICATION UNTIL SUCH SPLICE LOCATIONS ARE APPROVED.
4. ALL CONCRETE SHALL BE CLASS BZ WITH AIR ENTRAINMENT; REINFORCING STEEL SHALL BE GRADE 60. CAISSON CONCRETE MUST HAVE A MINIMUM COMPRESSIVE STRENGTH OF 2,700 PSI BEFORE INSTALLING THE SIGN STRUCTURE; VERIFY CONCRETE STRENGTH WITH MATURITY METER.
5. A DISCONNECT FOR THE POWER SUPPLY TO THE DMS SHALL BE PROVIDED AS SHOWN IN THE ROADWAY PLANS.
6. STRUCTURES SHALL BE GROUNDED IN ACCORDANCE WITH APPLICABLE ELECTRICAL CODES.

GENERAL NOTES (CONTINUED)

7. SHEETS IN THE INDEX MARKED WITH A ■ PROVIDE INSTRUCTIONS TO DESIGNERS FOR THEIR USE IN THE PREPARATION OF THE SIGN X-SECTION SHEETS IN THE ROADWAY PLANS.
8. NPS = NOMINAL PIPE SIZE; O.D. = OUTSIDE DIAMETER; DMS = DYNAMIC MESSAGE SIGN.
9. SHOP DRAWINGS SHALL BE SUBMITTED TO THE ENGINEER FOR REVIEW IN ACCORDANCE WITH SUBSECTION 105.02 OF THE STANDARD SPECIFICATIONS.
10. CAISSONS, STEEL SUPPORTS AND SURVEY WORK SHALL BE PAID FOR IN ACCORDANCE WITH BID ITEMS 503, 614 AND 625 RESPECTIVELY.
11. THERE SHALL BE NO PENETRATIONS OF MAST/CROSS ARMS OR POST OTHER THAN AS SHOWN ON THESE PLANS UNLESS APPROVED BY THE ENGINEER PRIOR TO FABRICATION.
12. ATTACH REMOTE ACCESS CABINET(S) TO POST WITH TWO ½" WIDE STAINLESS STEEL BANDS AND STAINLESS STEEL FLARED LEG BRACKETS WITH HEX HEAD BOLTS (BAND-IT D315 OR EQUIVALENT).
13. INSTALL STRUCTURE IDENTIFICATION PANEL IN ACCORDANCE WITH M AND S STANDARD S-614-12 USING TWO ½" WIDE STAINLESS STEEL BANDS AND STAINLESS STEEL FLARED LEG BRACKETS WITH HEX HEAD BOLTS (BAND-IT D315 OR EQUIVALENT).

GENERAL NOTES (CONTINUED)

14. WELDING OF STEEL SHALL CONFORM TO THE REQUIREMENTS OF AWS D 1.1. ALL AREAS TO BE WELDED SHALL BE GROUND TO BRIGHT METAL. NO BUTT WELD SPLICES WILL BE PERMITTED. ALL WELDING AND REQUIRED TESTING SHALL BE COMPLETE BEFORE ANY MATERIAL IS GALVANIZED.

    ENHANCED MAGNETIC PARTICLE TESTING SHALL BE PERFORMED ON AREAS DEFINED IN AWS D1.1 AND HEREIN. ENHANCED MAGNETIC PARTICLE TESTING SHALL BE CONDUCTED IN ACCORDANCE WITH ASTM E 709 AND AWS D 1.1, EXCEPT AS AMENDED HEREIN. ALTERNATING CURRENT SHALL BE USED. THE YOKE SPACING SHALL BE BETWEEN 2 AND 4 INCHES. THE MINIMUM LIFTING POWER SHALL BE 10 LBS. RED DRY PARTICLES SHALL BE USED. THE LIGHT INTENSITY SHALL MEET ASTM E 709, SECTION 7. PARTICLE APPLICATION AND SPECIMEN PREPARATION SHALL MEET THE REQUIREMENTS OF ASTM E 709 SECTIONS 9 AND 15, EXCEPT WHITE NON-AQUEOUS DEVELOPER MEETING ASTM E 165, TYPE 3, SHALL BE APPLIED TO THE TEST SURFACE PRIOR TO TESTING.

    THE YOKES SHALL BE SET IN TWO POSITIONS WHEN TESTING THE WELD OR BASE METAL. THEY SHALL BE POSITIONED BOTH NORMAL AND PARALLEL WITH RESPECT TO THE WELD AXIS AND ROLLING DIRECTION OF THE BASE METAL.

    ENHANCED MAGNETIC PARTICLE TESTS SHALL BE PERFORMED AT THE FOLLOWING LOCATIONS:

    (1) BASE METAL. ALL AREAS CONTACTED BY THE CARBON ARC GOUGE ELECTRODE, THE ELECTRODE CUP, AND THE WELDING ELECTRODE. ALL THREE CONDITIONS ARE ARC STRIKES.

    (2) FILLET WELDS. EACH DESIGN WELD SIZE ON MAIN MEMBER TO MAIN MEMBER AND SECONDARY MEMBER TO MAIN MEMBER WELDMENTS. ALL STOP-STARTS AND WELD TERMINI. ALL LINEAR INDICATIONS SHALL FURTHER BE EVALUATED WITH 10X OR 30X MAGNIFICATION. VERIFICATION SHALL BE RESOLVED BY EXCAVATION.

    (3) GROOVE WELDS. ALL THROUGH THICKNESS EDGES ON TRANSVERSE BUTT JOINT WELDMENTS IN TENSION AREAS.

    (4) REPAIRS. ALL REPAIR WELDS TO CORRECT DEFECTS IN GROOVE AND FILLET WELDS, PLATE CUT EDGES, CORRECTION OF FABRICATION ERRORS IN CUTTING, PUNCHING, DRILLING, OR FITTING, AND MEMBERS WHICH ARE TACKED OR WELDED AND SUBSEQUENTLY CUT APART AND REWELDED.
15. ALL CIRCUMFERENTIAL AND ALL LONGITUDINAL PIPE SEAM WELDS WITHIN 5" OF FULL PENETRATION CIRCUMFERENTIAL GROOVE WELDS SHALL BE FULL PENETRATION GROOVE WELDS AND SHALL BE INSPECTED AS SPECIFIED HEREIN. THE ACCEPTABLE MAXIMUM WELD UNDERCUT IS 0.01".
16. SEE TABLE ON SHEET 4 FOR CABINET ROTATION ADJUSTMENTS TO VERTICAL CLEARANCES MARKED WITH A ●.

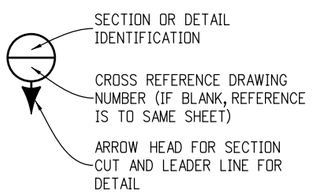

INDEX

1. SIGN NOTES (1 OF 2)
2. SIGN NOTES (2 OF 2) ■
3. CANTILEVER INSTALLATION DETAILS ■
4. CANTILEVER SIGN MOUNTING BRACKETS
5. CANTILEVER POST AND ARM DETAILS
6. CANTILEVER FIELD SPLICE DETAILS
7. CANTILEVER BASE PLATE DETAILS
8. CANTILEVER SIGN WALKWAY DETAILS (1 OF 2)
9. CANTILEVER SIGN WALKWAY DETAILS (2 OF 2)
10. BUTTERFLY INSTALLATION DETAILS ■
11. BUTTERFLY ASSEMBLY DETAILS
12. BUTTERFLY SIGN MOUNTING DETAILS
13. BUTTERFLY POST DETAILS
14. FOUNDATION & ANCHOR BOLT DETAILS ■

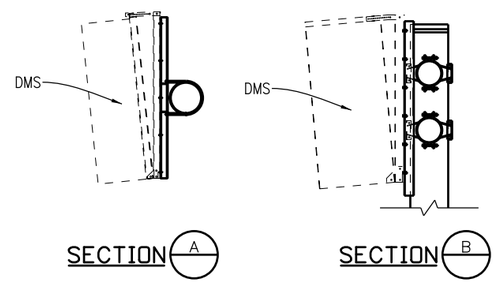

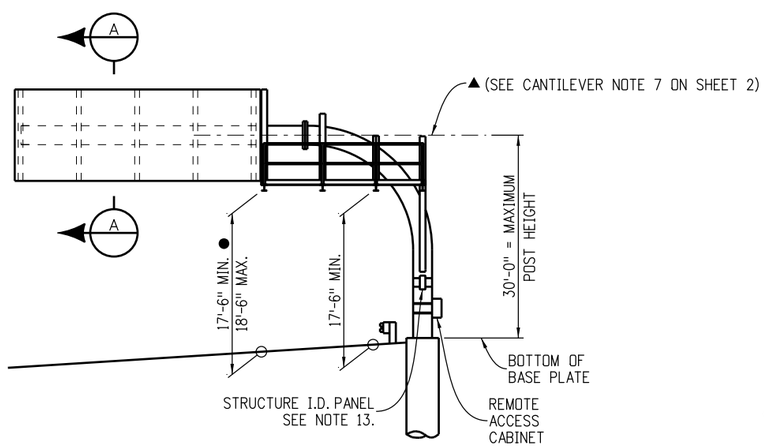

CANTILEVER SIGN

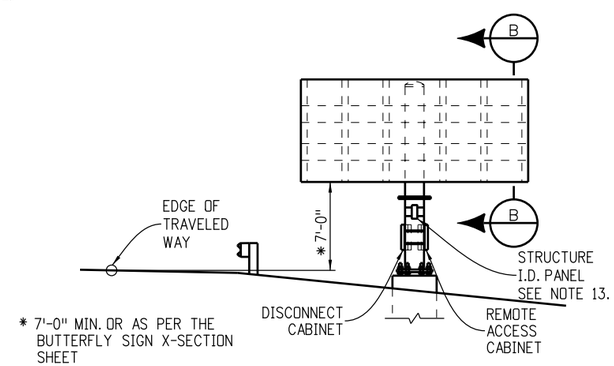

BUTTERFLY SIGN (ROADSIDE INSTALLATION)

(SEE SIGN X-SECTION SHEET IN TRAFFIC PLANS)

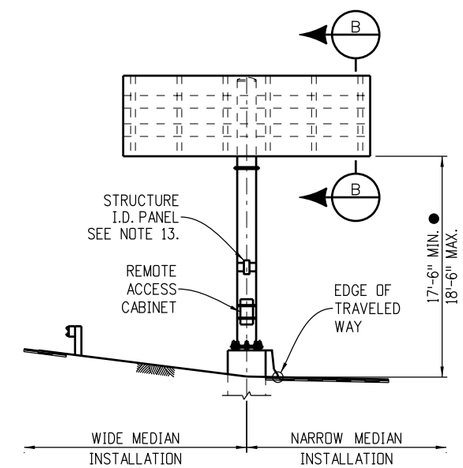

BUTTERFLY SIGN (MEDIAN INSTALLATION)

(SEE SIGN X-SECTION SHEET IN TRAFFIC PLANS)

Computer File Information		
Creation Date: 07-04-12	Initials: JRM	
Last Modification Date: 07-04-12	Initials: JRM	R-1
Full Path: www.coloradodot.info/business/designsupport		R-X
Drawing File Name: S-614-60_01of14 REV1.dgn		R-X
CAD Ver.: MicroStation V8 Scale: Not to Scale Units: English		R-X

Sheet Revisions	
Date:	Comments
06-17-16	REVISE NOTE 4

Colorado Department of Transportation
4201 East Arkansas Avenue
Denver, Colorado 80222
Phone: (303) 757-9543
Fax: (303) 757-9219
Safety & Traffic Engineering Branch

KCM/RLO

DYNAMIC SIGN MONOTUBE STRUCTURES

Issued By: Safety and Traffic Engineering Branch on July 4, 2012

STANDARD PLAN NO.

S-614-60

Sheet No. 1 of 14

CANTILEVER NOTES

1. SIGN STRUCTURES SHALL BE CONSTRUCTED TRUE TO THE SPECIFIED DIMENSIONS, SHALL BE FREE FROM KINKS, TWISTS OR BENDS, AND SHALL BE UNIFORM IN APPEARANCE. THE COMPLETED SECTIONS SHALL BE ASSEMBLED IN THE SHOP AND SHALL BE CHECKED FOR STRAIGHTNESS, ALIGNMENT, AND DIMENSIONAL ACCURACY. ANY VARIATIONS SHALL BE CORRECTED TO THE SATISFACTION OF THE ENGINEER.

2. MAST ARMS SHALL BE TEMPORARILY SUPPORTED TO TAKE ALL LOAD OFF OF THE FIELD SPLICES WHILE BOLTS ARE BEING TIGHTENED IN ORDER TO FIRMLY SEAT THE FLANGE PLATES.

3. POST MEMBERS SHALL BE FORMED TO THE RADII SHOWN ON THE PLANS BY HEAT TREATMENT OR BY FABRICATION TO SUCH RADII BY METHODS WHICH WILL NOT CRIMP OR BUCKLE THE INTERIOR RADIUS OF THE PIPE BEND.

4. CLIPS, EYES, OR REMOVABLE BRACKETS SHALL BE AFFIXED TO POST AND MAST ARM, AS NECESSARY, TO SECURE THE SIGN DURING SHIPPING AND FOR LIFTING AND MOVING DURING ERECTION. THIS IS TO PREVENT DAMAGE TO THE FINISHED GALVANIZED OR PAINTED SURFACES. BRACKETS ON TUBULAR SIGN STRUCTURES SHALL BE REMOVED AFTER ERECTION. DETAILS OF SUCH DEVICES SHALL BE SHOWN ON THE SHOP DRAWINGS.

5. WALKWAYS SHALL LEAD UP TO THE CABINET ACCESS DOOR AS SPECIFIED ON THE SIGN X-SECTION SHEETS IN THE ROADWAY PLANS.

6. ALL PIPE MEMBERS SHALL BE HOT-DIP GALVANIZED INSIDE AND OUTSIDE AFTER FABRICATION AS PER ASTM A123, UNLESS PAINTING IS CALLED FOR ON THE PLANS. PAINTING SHALL CONFORM TO SECTION 522, DUPLEX COATING SYSTEM. WALKWAY GRATINGS, WALKWAY BRACKETS, SAFETY RAILINGS AND ALL NUTS, BOLTS AND WASHERS FOR SIGN STRUCTURES SHALL BE GALVANIZED AFTER FABRICATION AS PER ASTM A123 OR ASTM A153, AS APPROPRIATE, AND SHALL NOT BE PAINTED. TENSION CONTROL BOLTS OR DIRECT TENSION INDICATING WASHERS USED IN HIGH-STRENGTH BOLTED CONNECTIONS SHALL BE MECHANICALLY GALVANIZED PER ASTM B695, COATING CLASS 55.

7. CANTILEVER ARMS MARKED WITH A ▲ MUST BE LEVEL OR TILTED UPWARD NO MORE THAN 1° MAXIMUM AFTER INSTALLATION OF THE SIGN.

BUTTERFLY NOTES

1. SIGN STRUCTURES SHALL BE CONSTRUCTED TRUE TO THE SPECIFIED DIMENSIONS, SHALL BE FREE OF KINKS, TWISTS OR BENDS, AND SHALL BE UNIFORM IN APPEARANCE. THE POST TO CROSS ARM CONNECTIONS SHALL BE PREASSEMBLED IN THE SHOP AFTER GALVANIZING. ASSEMBLIES WITH THE OPTIONAL FIELD SPLICE SHALL BE PREASSEMBLED ABOVE THE SPLICE FOR SHIPPING TO THE JOB SITE.

2. POST AND CROSS ARMS SHALL BE FABRICATED IN SINGLE SECTIONS PRIOR TO GALVANIZING. SPLICING OF SECTIONS IS NOT PERMITTED.

3. CLIPS, EYES, OR REMOVABLE BRACKETS SHALL BE AFFIXED TO POST AND CROSS ARMS, AS NECESSARY, TO SECURE FOR SHIPPING AND FOR LIFTING AND MOVING DURING ERECTION IN ORDER TO PREVENT DAMAGE TO THE FINISHED GALVANIZED SURFACES. TEMPORARY BRACKETS ON SIGN STRUCTURE SHALL BE REMOVED AFTER ERECTION. DETAILS OF SUCH DEVICES SHALL BE SHOWN ON THE SHOP DRAWINGS. ERECTION LUGS ARE REQUIRED ON ONE END OF THE CROSS ARMS TO FACILITATE PULLING OF THE CROSS ARMS THROUGH THE POST. THE ERECTION LUGS SHALL BE POSITIONED TO FORCE THE "PULL" TO OCCUR ON THE CENTERLINE OF THE CROSS ARM. ERECTOR SHALL SUPPORT THE POST ON EITHER SIDE OF THE CROSS-ARM PRIOR TO PULLING THE CROSS-ARM THROUGH THE HOLE IN THE POST.

4. ALL PIPE MEMBERS SHALL BE HOT-DIP GALVANIZED INSIDE AND OUTSIDE AFTER FABRICATION AS PER ASTM A123, UNLESS PAINTING IS CALLED FOR ON THE PLANS. PAINTING SHALL CONFORM TO SECTION 522, DUPLEX COATING SYSTEM. ALL NUTS, BOLTS AND WASHERS FOR SIGN STRUCTURES SHALL BE GALVANIZED AFTER FABRICATION AS PER ASTM A123 OR ASTM A153, AS APPROPRIATE, AND SHALL NOT BE PAINTED. TENSION CONTROL BOLTS OR DIRECT TENSION INDICATING WASHERS USED IN HIGH-STRENGTH BOLTED CONNECTIONS SHALL BE MECHANICALLY GALVANIZED PER ASTM B695, COATING CLASS 55.

5. SEE THE BUTTERFLY MOUNTED SIGN X-SECTION SHEET IN THE TRAFFIC PLANS FOR THE DMS PANEL WIDTH, HEIGHT, DEPTH, AND WEIGHT; TOP OF CAISSON ELEVATION, STATION AND OFFSET; DMS PANEL OFFSET FROM SHOULDER; SUPPORT POST HEIGHT, ANGLE θ, AND GUARDRAIL PROTECTION LIMITS. DO NOT USE ANY POST HEIGHT WHICH EXCEEDS THE MAXIMUM POST HEIGHT SHOWN IN THE POST AND CROSS ARM PIPE DATA TABLE ON SHEET 11. STRUCTURES OVER TRAFFIC AND STRUCTURES THAT COULD FALL INTO THE TRAVELED WAY OR ONTO THE SHOULDER SHALL BE ASSIGNED A STAFF BRIDGE GENERATED STRUCTURE NUMBER.

CANTILEVER DESIGN DATA

SPECIFICATIONS:

DESIGN: "STANDARD SPECIFICATIONS FOR STRUCTURAL SUPPORTS FOR HIGHWAY SIGNS, LUMINAIRES AND TRAFFIC SIGNALS", AMERICAN ASSOCIATION OF STATE HIGHWAY AND TRANSPORTATION OFFICIALS (2001 AASHTO). R-1

SUBSECTION 17.4, SIGNS, IN THE STAFF BRIDGE BRANCH BRIDGE DESIGN MANUAL.

CONSTRUCTION: CDOT STANDARD SPECIFICATIONS, THESE STANDARD SHEETS AND THE PROJECT PLANS.

WIND LOADING: 100 MPH VELOCITY

BUTTERFLY DESIGN DATA

SPECIFICATIONS:

DESIGN: "STANDARD SPECIFICATIONS FOR STRUCTURAL SUPPORTS FOR HIGHWAY SIGNS, LUMINAIRES AND TRAFFIC SIGNALS", AMERICAN ASSOCIATION OF STATE HIGHWAY AND TRANSPORTATION OFFICIALS (2009 AASHTO).

SUBSECTION 17.4, SIGNS, IN THE STAFF BRIDGE BRANCH BRIDGE DESIGN MANUAL.

CONSTRUCTION: CDOT STANDARD SPECIFICATIONS, THESE STANDARD SHEETS AND THE PROJECT PLANS.

WIND LOADING: 110 MPH VELOCITY (3-SECOND GUST).

MATERIALS

ELEMENT	SPECIFICATION ASTM	AASHTO	AISI	CLARIFICATIONS
POSTS, MAST/CROSS ARMS	A53			#1
BARS, PLATES AND SHAPES	A709	M-270		#2
HOLLOW STRUCTURAL SECTIONS (HSS)	A500			#3
HIGH-STRENGTH BOLTS (H.S. BOLTS)	A325	M-164		#4
HIGH-STRENGTH NUTS	A563	M-291		
HIGH-STRENGTH WASHERS	F436	M-292		#5
U-BOLTS (RODS)	F1554	M-314		GRADE 55 STEEL
ANCHOR BOLTS	F1554	M-314		GRADE 55 STEEL
SPHERICAL WASHER SETS	A29		4140	#6
COLLAR NUTS	A29		4140	#6, #7

#1 PIPE POSTS AND MAST/CROSS ARMS SHALL BE WELDED OR SEAMLESS STEEL PIPE CONFORMING TO THE SPECIFICATIONS OF ASTM DESIGNATION: A53, GRADE B.

#2 GRADES 36 OR 50. ASTM A992 SHAPES MAY BE SUBSTITUTED.

#3 HOLLOW STRUCTURAL SECTION SPECIFICATIONS APPLY TO THE STRUCTURAL TUBING SECTIONS (TS) USED AT HANDHOLES AND SAFETY RAILINGS.

#4 TENSION CONTROL (TC) BOLTS CONFORMING TO ASTM F1852 MAY BE SUBSTITUTED FOR ASTM A325 BOLTS. ALL OTHER BOLTS AND NUTS SHALL CONFORM TO THE SPECIFICATIONS OF ASTM DESIGNATION: A307. INSTALL A307 BOLTS WITH COMMERCIAL QUALITY WASHERS.

#5 ASTM F959, COMPRESSIBLE-WASHER-TYPE DIRECT TENSION INDICATORS MAY BE SUBSTITUTED FOR ASTM F436 WASHERS AT HIGH-STRENGTH BOLTED CONNECTIONS.

#6 SPHERICAL WASHER SETS AND COLLAR NUTS SHALL BE HARDENED IN ACCORDANCE WITH ASTM F436 AND HOT-DIP GALVANIZED IN ACCORDANCE WITH ASTM A153.

#7 A SPHERICAL WASHER SET AND AN A325 NUT MAY BE SUBSTITUTED FOR A COLLAR NUT.

OVERHEAD SIGN X-SECTION SHEET(S) SHALL SHOW:

1. SIGN STRUCTURE LOCATION (HIGHWAY, STATION AND DIRECTION)
2. LENGTH OF STRUCTURE SPAN
3. DMS SIZE (WIDTH, HEIGHT, DEPTH AND WEIGHT) AND LOCATION ON STRUCTURE
4. OFFSET FROM SHOULDER
5. POST HEIGHT FROM TOP OF CAISSON TO ℄ MAST ARM
6. CAISSON DIAMETER AND MINIMUM EMBEDMENT
7. TOP OF CAISSON ELEVATION
8. CAISSON PAY LENGTH
9. STATIONS AND OFFSETS TO CAISSON
10. ANGLE θ FOR BUTTERFLY INSTALLATIONS
11. GUARDRAIL PROTECTION LIMITS
12. WALKWAY LOCATION IF REQUIRED
13. LANE LINE LOCATION(S) IF STRUCTURE IS OVER TRAFFIC
14. LOCATION OF DISCONNECT FOR THE POWER SUPPLY
15. LOCATION OF REMOTE ACCESS CABINET ON POLE
16. AS CONSTRUCTED BLOCK

-CANTILEVER INSTALLATION DETAILS-

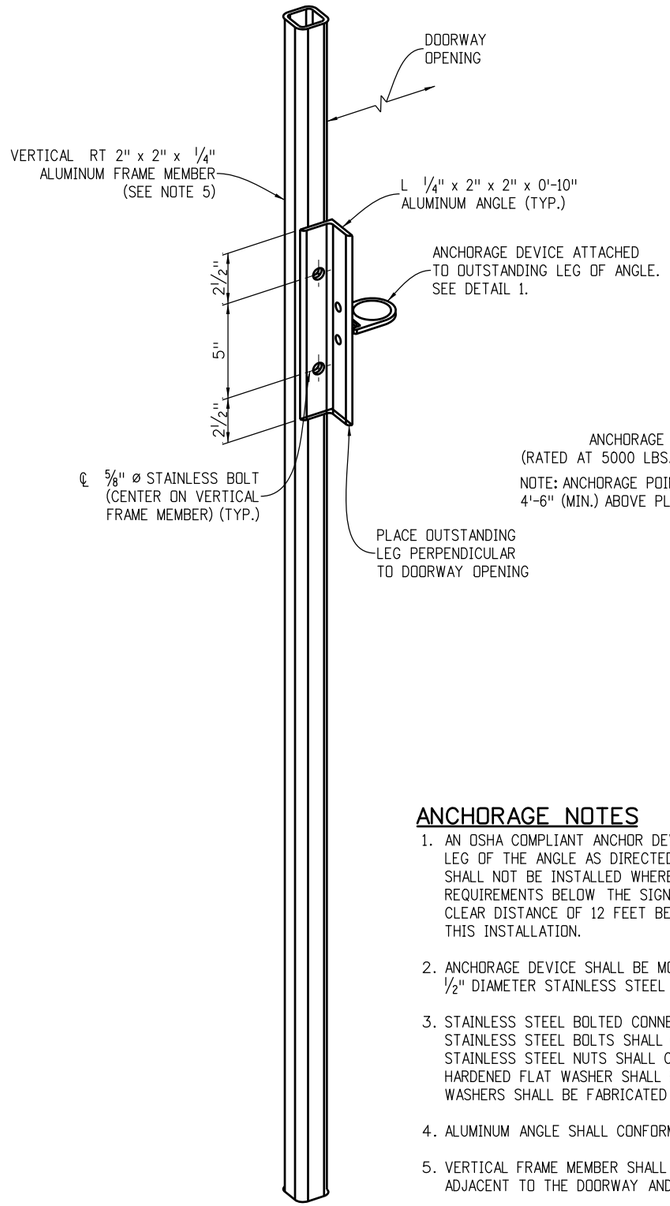

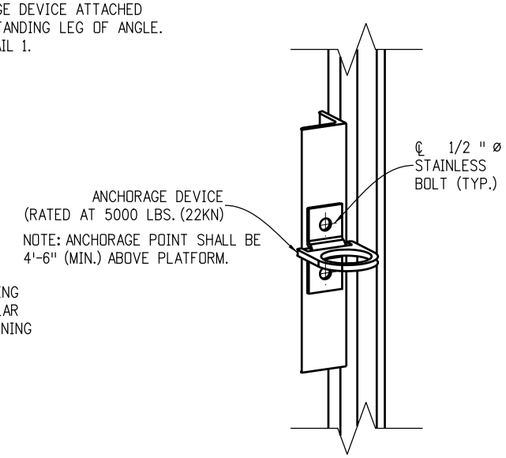

DETAIL 1

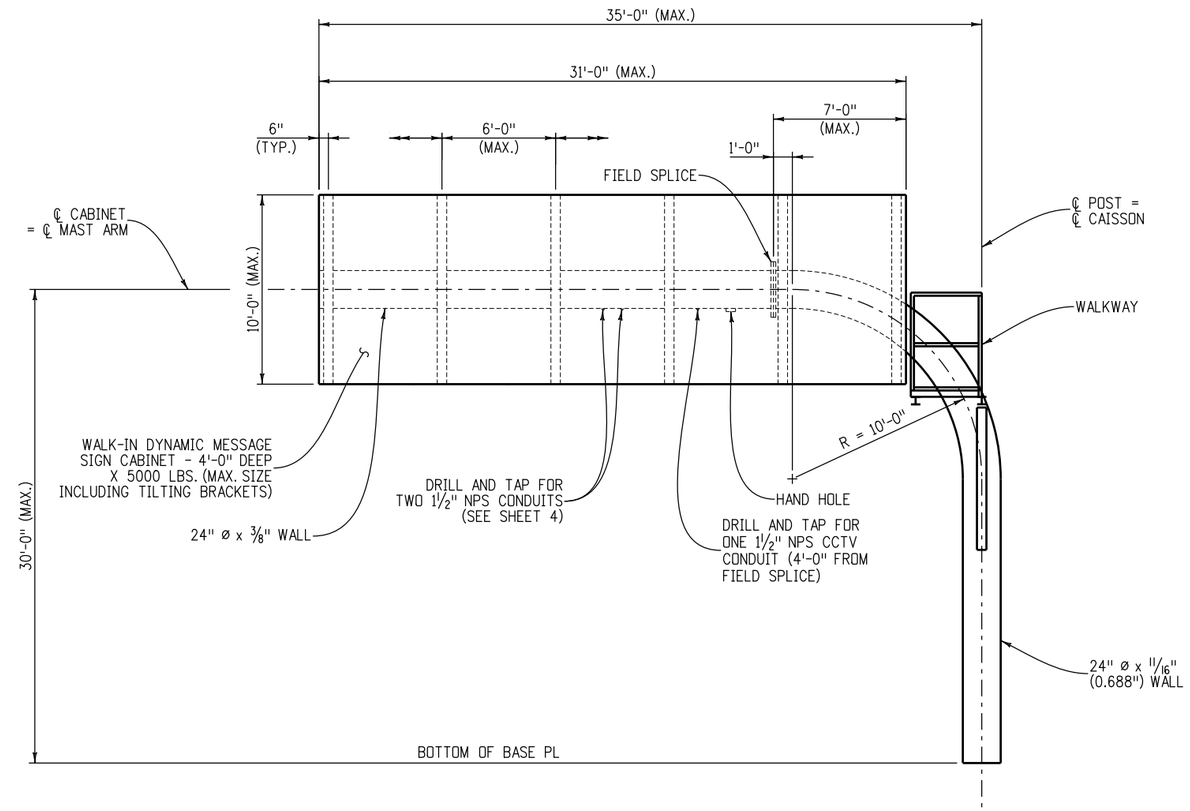

ANCHORAGE NOTES

1. AN OSHA COMPLIANT ANCHOR DEVICE SHALL BE MOUNTED TO THE OUTSTANDING LEG OF THE ANGLE AS DIRECTED BY THE ENGINEER. ANCHORAGE DEVICES SHALL NOT BE INSTALLED WHERE MINIMUM FALL PROTECTION CLEARANCE REQUIREMENTS BELOW THE SIGN ARE NOT MET. A MINIMUM UNOBSTRUCTED CLEAR DISTANCE OF 12 FEET BELOW THE SIGN CABINET IS REQUIRED FOR THIS INSTALLATION.
2. ANCHORAGE DEVICE SHALL BE MOUNTED WITH A MINIMUM OF TWO 1/2" DIAMETER STAINLESS STEEL BOLTS.
3. STAINLESS STEEL BOLTED CONNECTIONS SHALL CONFORM TO ASTM A962. STAINLESS STEEL BOLTS SHALL CONFORM TO ASTM F593, GROUP 1. STAINLESS STEEL NUTS SHALL CONFORM TO ASTM F594, GROUP 1. A HARDENED FLAT WASHER SHALL BE PROVIDED UNDER THE NUT. FLAT WASHERS SHALL BE FABRICATED FROM THE SAME MATERIAL AS THE NUTS.
4. ALUMINUM ANGLE SHALL CONFORM TO ASTM B308.
5. VERTICAL FRAME MEMBER SHALL BE A PRIMARY FRAMING COMPONENT, ADJACENT TO THE DOORWAY AND ON THE SUPPORT FACE OF THE CABINET.

CANTILEVER NOTES

1. THE MAXIMUM CABINET OVERLAP ONTO ELBOW SHALL NOT EXCEED 7'-0" FROM THE FIELD SPLICE.
2. ALL POSTS BETWEEN BASE PLATE AND FIELD SPLICE SHALL HAVE A TUBE WALL THICKNESS OF 11/16" (0.688"). ALL MAST ARMS SHALL HAVE A TUBE WALL THICKNESS OF 3/8".
3. SEE SHEET 6 FOR FIELD SPLICE DETAILS.

OSHA COMPLIANT ANCHORAGE DETAILS

Computer File Information		
Creation Date: 07-04-12	Initials: JRM	
Last Modification Date: 07-04-12	Initials: JRM	R-X
Full Path: www.coloradodot.info/business/designsupport		R-X
Drawing File Name: S-614-60_03of14.dgn		R-X
CAD Ver.: MicroStation V8 Scale: Not to Scale Units: English		R-X

Sheet Revisions	
Date:	Comments

Colorado Department of Transportation
4201 East Arkansas Avenue
Denver, Colorado 80222
Phone: (303) 757-9543
Fax: (303) 757-9219
Safety & Traffic Engineering Branch KCM/RLO

DYNAMIC SIGN MONOTUBE STRUCTURES

Issued By: Safety and Traffic Engineering Branch on July 4, 2012

STANDARD PLAN NO.

S-614-60

-CANTILEVER SIGN MOUNTING BRACKETS-

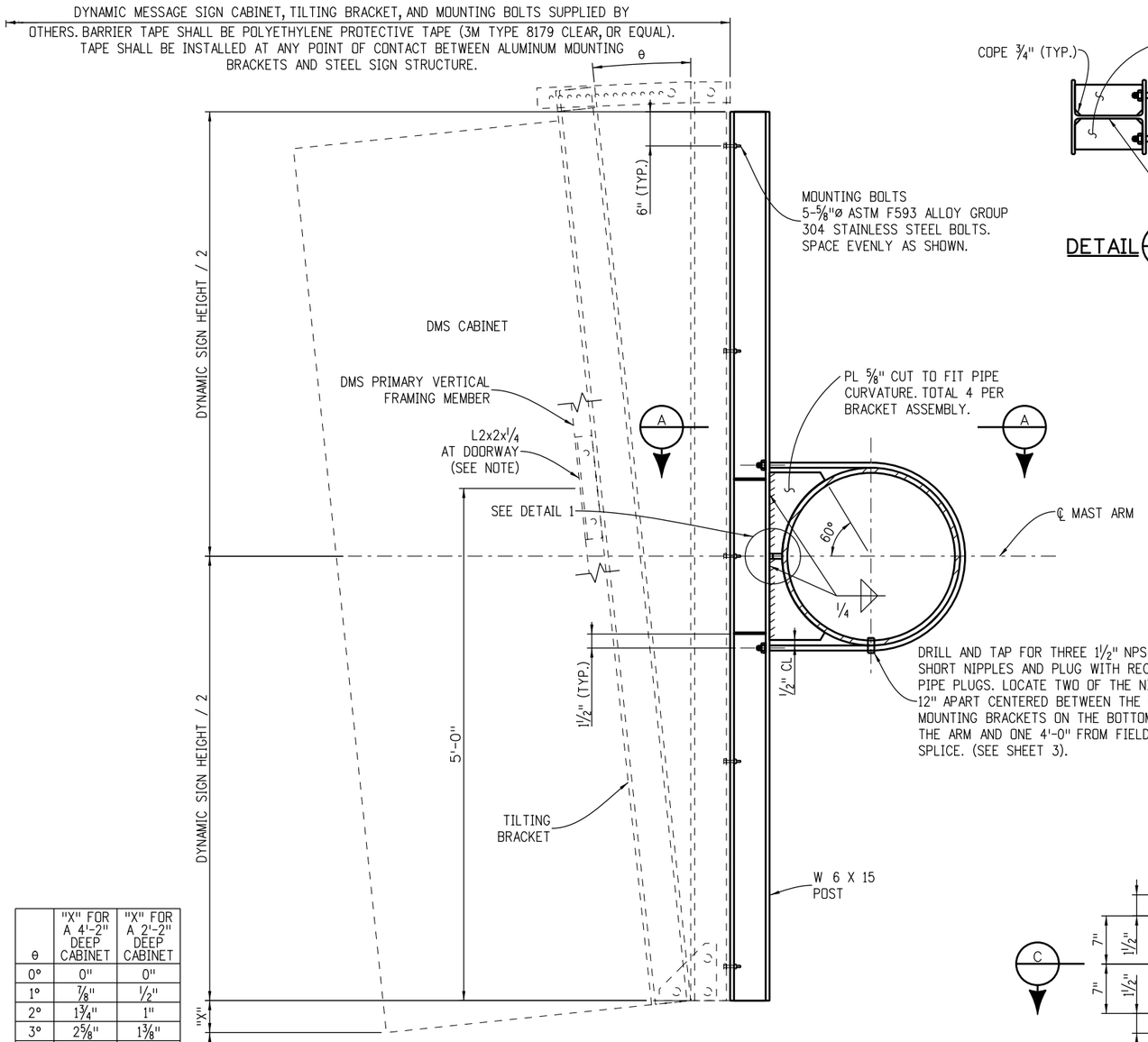

SECTION A/8

θ	"X" FOR A 4'-2" DEEP CABINET	"X" FOR A 2'-2" DEEP CABINET
0°	0"	0"
1°	7/8"	1/2"
2°	1¾"	1"
3°	2⅝"	1⅜"
4°	3½"	1⅞"
5°	4⅜"	2¼"
6°	5¼"	2¾"
7°	6⅛"	3¼"
8°	7"	3¾"
9°	7⅞"	4⅛"

NOTE:

DMS CABINET FABRICATOR SHALL FASTEN AN ALUMINUM ANGLE TO THE PRIMARY VERTICAL FRAME MEMBER ADJACENT TO THE DOOR AS SHOWN. ANGLE PLACEMENT SHALL PRESENT A BLANK VERTICAL FACE PARALLEL TO THE FRONT FACE OF THE DMS CABINET FOR FIELD MOUNTING AN OSHA COMPLIANT ANCHORAGE POINT. A MINIMUM OF TWO 5/8" DIAMETER STAINLESS STEEL BOLTS ARE REQUIRED TO FASTEN ANGLE TO FRAME AS SHOWN IN THE OSHA COMPLIANT ANCHORAGE DETAILS ON SHEET 3 OF 14.

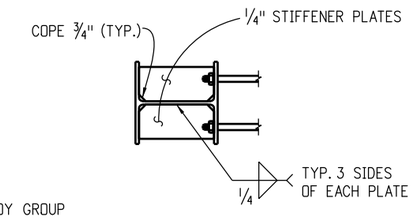

DETAIL 2

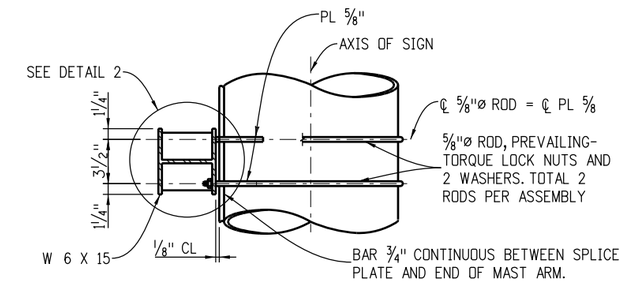

VIEW A

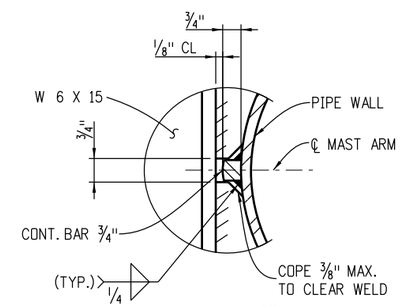

DETAIL 1

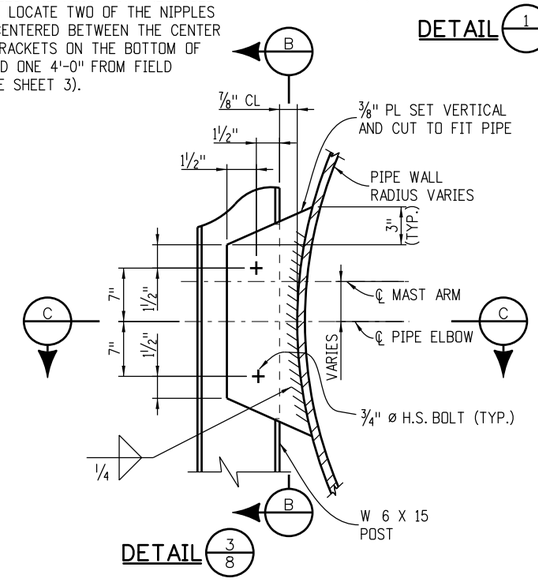

DETAIL 3/8

MOUNTING BRACKET ON ELBOW AND POLE

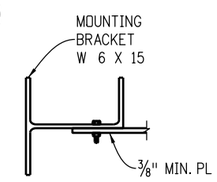

SECTION C

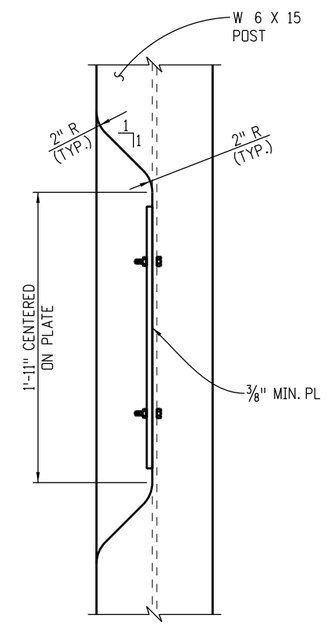

SECTION B

Computer File Information		
Creation Date: 07-04-12	Initials: JRM	
Last Modification Date: 07-04-12	Initials: JRM	R-X
Full Path: www.coloradodot.info/business/designsupport		R-X
Drawing File Name: S-614-60_04of14.dgn		R-X
CAD Ver.: MicroStation V8 Scale: Not to Scale Units: English		R-X

Sheet Revisions	
Date:	Comments

Colorado Department of Transportation
4201 East Arkansas Avenue
Denver, Colorado 80222
Phone: (303) 757-9543
Fax: (303) 757-9219
Safety & Traffic Engineering Branch KCM/RLO

DYNAMIC SIGN MONOTUBE STRUCTURES

Issued By: Safety and Traffic Engineering Branch on July 4, 2012

STANDARD PLAN NO.

S-614-60

-CANTILEVER POST AND ARM DETAILS-

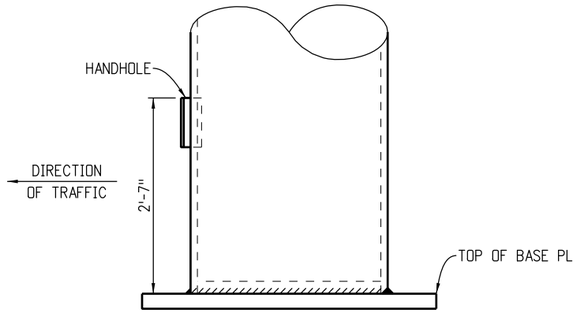

POST BASE ELEVATION

(FOR BASE PL DETAILS SEE SHEET 7)

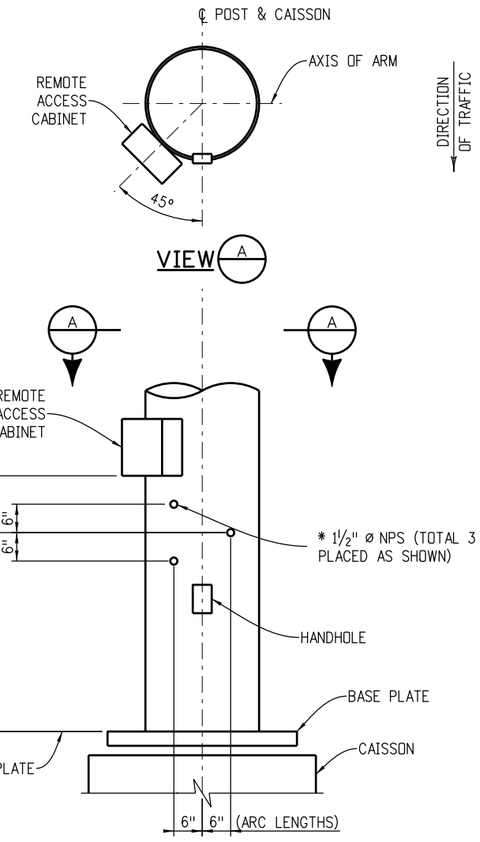

CONDUIT PENETRATION DETAILS

* PLUG WITH RECESSED PIPE PLUGS

■ DISCONNECT CABINET FOR THE POWER SUPPLY SHALL BE LOCATED OUTSIDE OF THE CLEAR-ZONE.

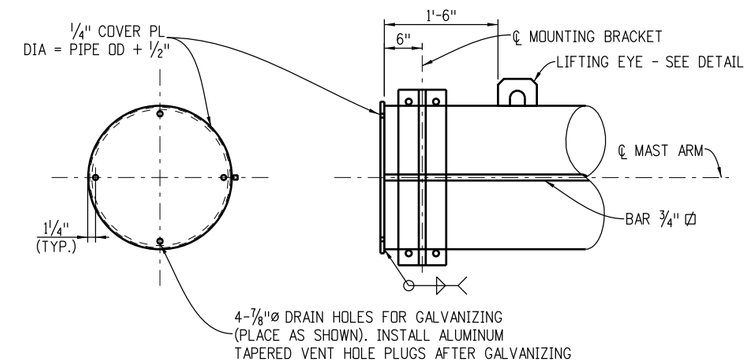

MAST ARM END DETAIL

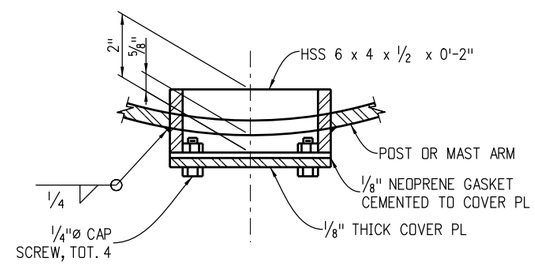

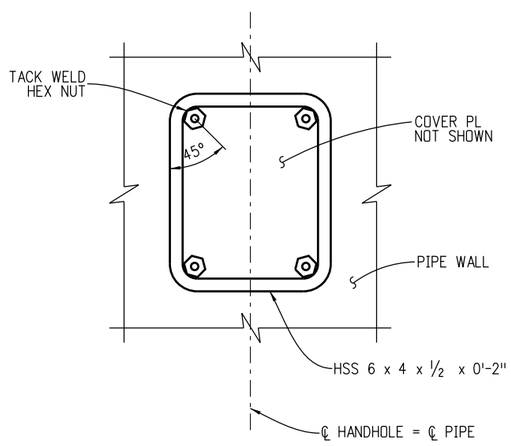

HANDHOLE AND COVER DETAILS

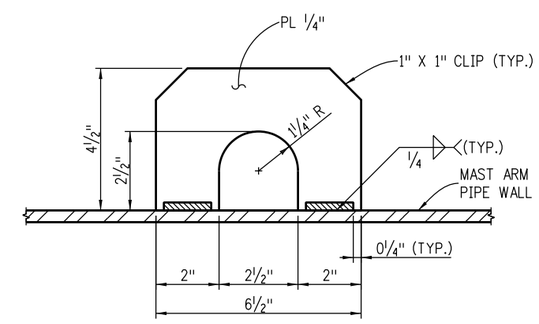

LIFTING EYE DETAIL

Computer File Information			Sheet Revisions	
Creation Date: 07-04-12	Initials: JRM		Date:	Comments
Last Modification Date: 07-04-12	Initials: JRM	R-X		
Full Path: www.coloradodot.info/business/designsupport		R-X		
Drawing File Name: S-614-60_05of14.dgn		R-X		
CAD Ver.: MicroStation V8 Scale: Not to Scale Units: English		R-X		

Colorado Department of Transportation
4201 East Arkansas Avenue
Denver, Colorado 80222
Phone: (303) 757-9543
Fax: (303) 757-9219
Safety & Traffic Engineering Branch

KCM/RLO

DYNAMIC SIGN MONOTUBE STRUCTURES

Issued By: Safety and Traffic Engineering Branch on July 4, 2012

STANDARD PLAN NO.

S-614-60

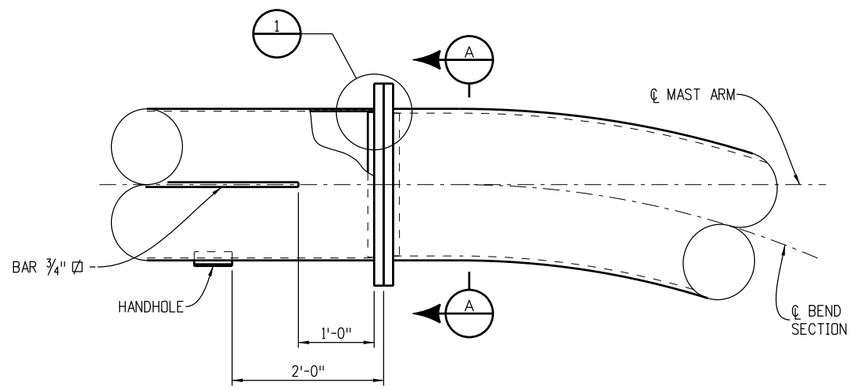

FIELD SPLICE

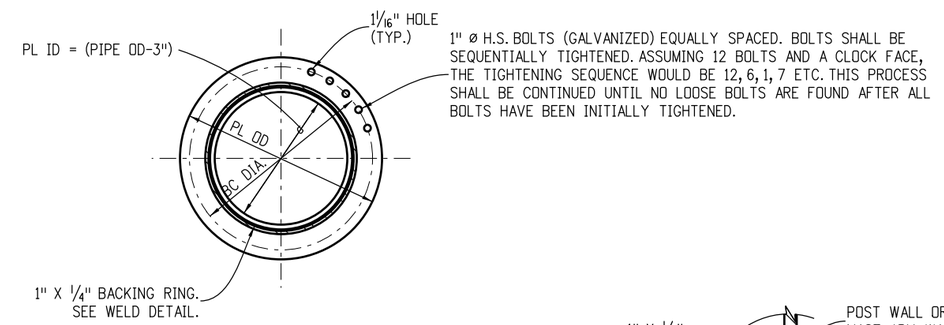

SECTION A

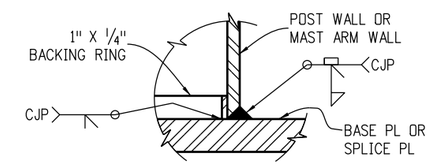

DETAIL 1

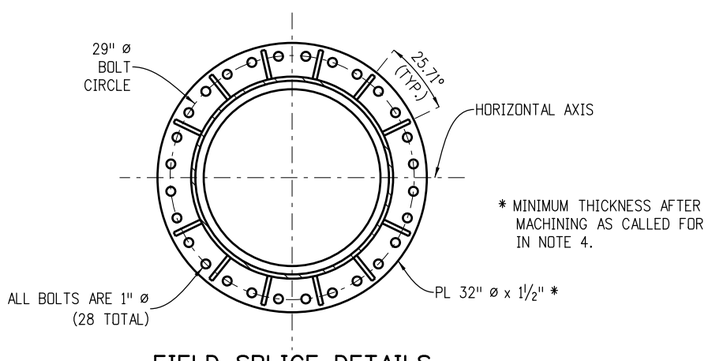

FIELD SPLICE DETAILS

STIFFENERS SHALL BE LOCATED ON BOTH SIDES OF THE FIELD SPLICE.
CLIP WASHERS AS NEEDED TO AVOID INTERFERENCE WITH STIFFENER WELDS.

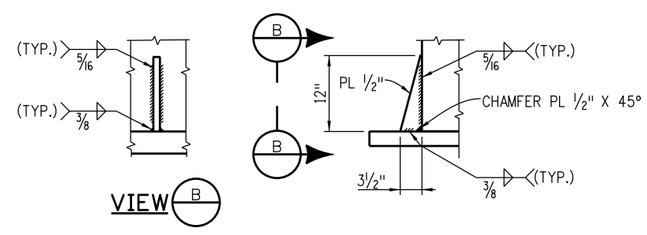

VIEW B

STIFFENER DETAILS

NOTES:

1. STIFFENERS ARE TO BE PLACED ON ALL CANTILEVER FIELD SPLICES. STIFFENERS ARE NOT SHOWN ELSEWHERE IN THESE SHEETS FOR CLARITY.
2. TERMINATE WELD ½" SHORT OF THE TOP OF THE STIFFENER PLATE. AT THE OTHER 3 WELD TERMINATIONS ON THESE TWO TYPICAL WELDS, STOP THE WELD ¼" SHORT OF THE END OF THE PLATE.
3. SPLICE DESIGN BASED ON ARM CAPACITY.
4. THE MATING SURFACES OF THE FLANGE SPLICE PLATES SHALL BE MACHINED TO A COMMON PLANE WITHIN A TOLERANCE OF 1/64" USING A PORTABLE FLANGE FACER AFTER WELDING AND PRIOR TO GALVANIZING.

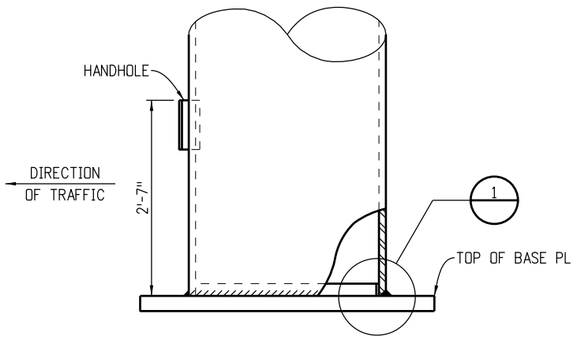

POST BASE ELEVATION

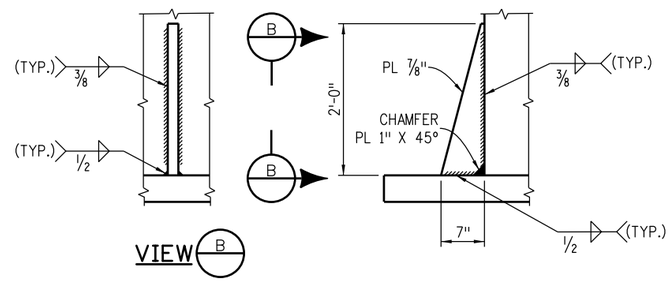

STIFFENER DETAILS
(AT POST BASE - SEE NOTES)

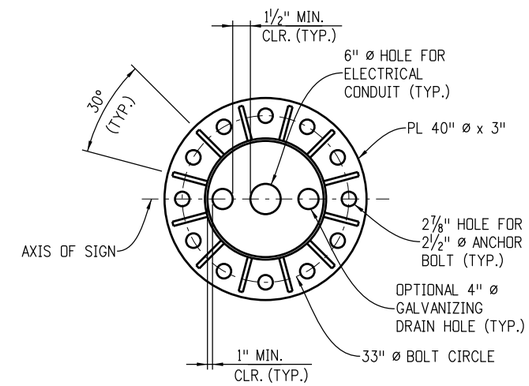

BASE PLATE DETAILS

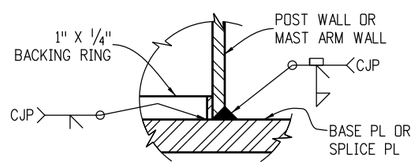

DETAIL 1

NOTES:

1. STIFFENERS ARE NOT SHOWN ELSEWHERE IN THESE SHEETS FOR CLARITY.
2. TERMINATE WELD 1/2" SHORT OF THE TOP OF THE STIFFENER PLATE. AT THE OTHER 3 WELD TERMINATIONS ON THESE TWO TYPICAL WELDS STOP THE WELD 1/4" SHORT OF THE END OF THE PLATE.

Computer File Information		
Creation Date: 07-04-12	Initials: JRM	
Last Modification Date: 07-04-12	Initials: JRM	R-X
Full Path: www.coloradodot.info/business/designsupport		R-X
Drawing File Name: S-614-60_07of14.dgn		R-X
CAD Ver.: MicroStation V8 Scale: Not to Scale Units: English		R-X

Sheet Revisions	
Date:	Comments

Colorado Department of Transportation
4201 East Arkansas Avenue
Denver, Colorado 80222
Phone: (303) 757-9543
Fax: (303) 757-9219
Safety & Traffic Engineering Branch KCM/RLO

DYNAMIC SIGN MONOTUBE STRUCTURES

Issued By: Safety and Traffic Engineering Branch on July 4, 2012

STANDARD PLAN NO.
S-614-60

-CANTILEVER SIGN WALKWAY DETAILS (1 OF 2)-

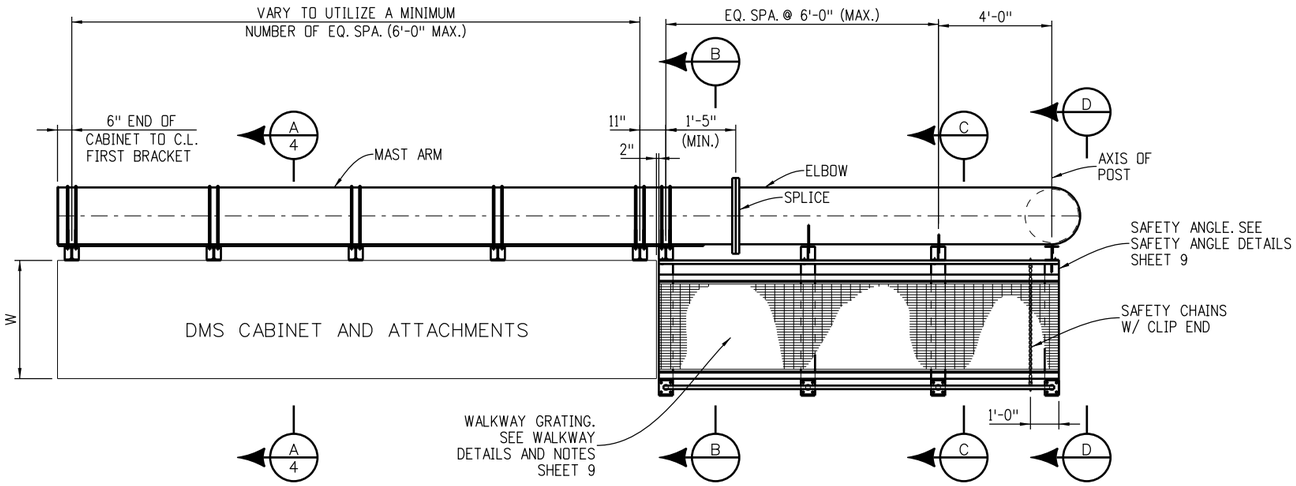

WALKWAY PLAN

WALKWAY LEADING TO CABINET

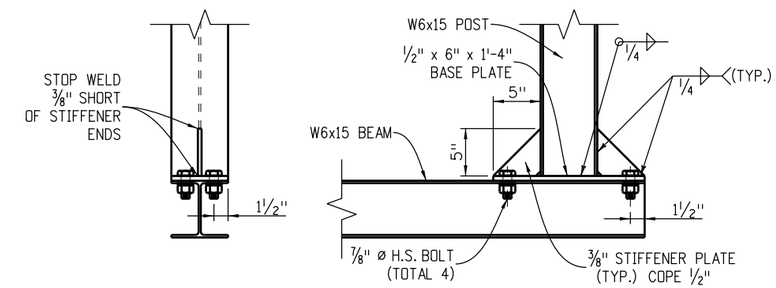

BEAM TO POST CONNECTION DETAIL

NOTES

1. MAINTAIN UNIFORM POST SPACING WHERE POSSIBLE.
2. MAXIMUM POST SPACING SHALL NOT EXCEED 6'-0".
3. SEE SHEETS 4 AND 9 FOR ADDITIONAL DETAILS NOT SHOWN HEREON.
4. LENGTH OF BEAM SHALL BE BASED ON DMS WIDTH (W) TO PERMIT CLEARANCE BETWEEN RAILS FOR UNOBSTRUCTED OPENING OF DMS ACCESS DOOR. Lmin = W+27 INCHES.
5. SAFETY CHAIN SHALL BE 1/4" GALVANIZED STEEL COIL CHAIN, APPROXIMATELY 36 LINKS PER YARD.
6. TOP OF HORIZONTAL W6x15 ELEVATION SHALL BE 8 1/2" BELOW BOTTOM OF DMS CABINET WITH THE TILTING BRACKET IN THE 0° (UNROTATED) POSITION.

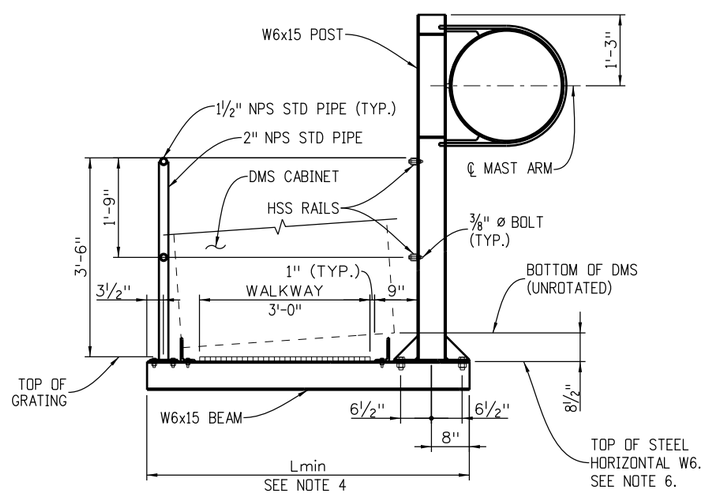

SECTION B

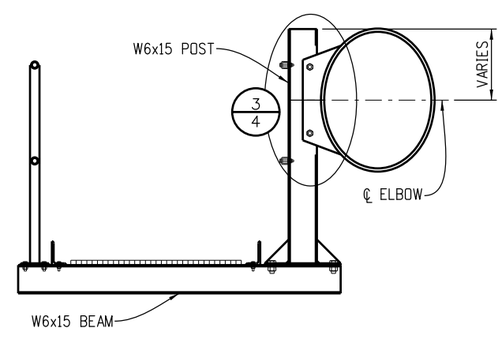

SECTION C

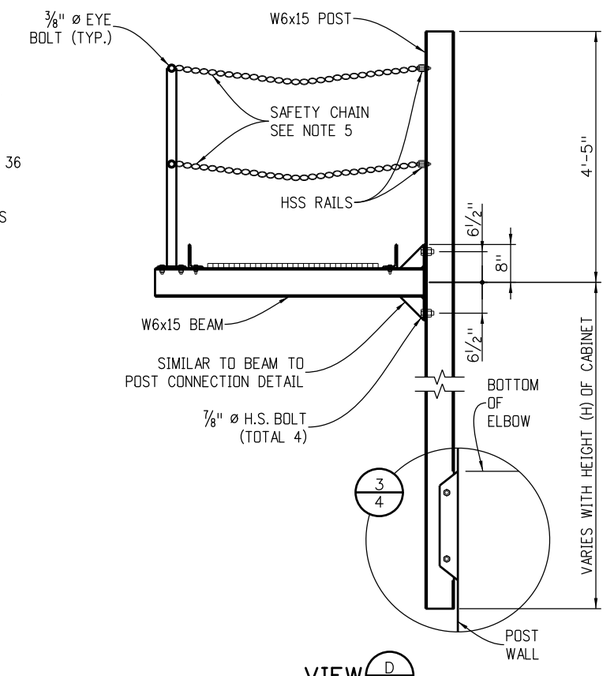

VIEW D

Computer File Information		
Creation Date: 07-04-12	Initials: JRM	
Last Modification Date: 07-04-12	Initials: JRM	R-X
Full Path: www.coloradodot.info/business/designsupport		R-X
Drawing File Name: S-614-60_08of14.dgn		R-X
CAD Ver.: MicroStation V8 Scale: Not to Scale Units: English		R-X

Sheet Revisions	
Date:	Comments

Colorado Department of Transportation
4201 East Arkansas Avenue
Denver, Colorado 80222
Phone: (303) 757-9543
Fax: (303) 757-9219
Safety & Traffic Engineering Branch

KCM/RLO

DYNAMIC SIGN MONOTUBE STRUCTURES

Issued By: Safety and Traffic Engineering Branch on July 4, 2012

STANDARD PLAN NO.

S-614-60

-CANTILEVER SIGN WALKWAY DETAILS (2 OF 2)-

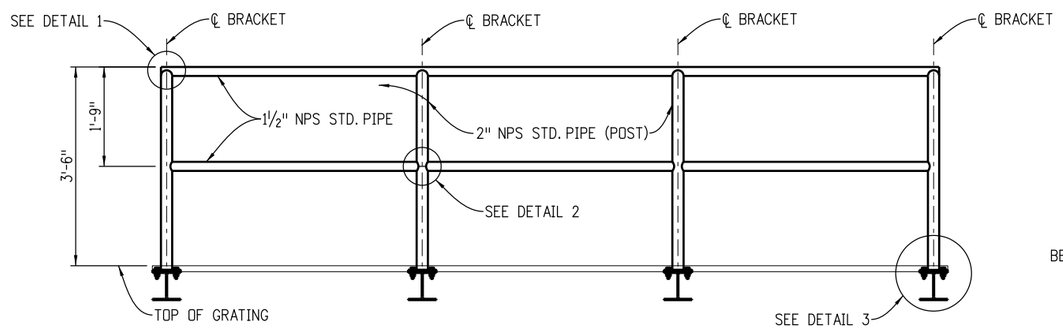

SAFETY RAILING ELEVATION

(OUTSIDE SAFETY RAILING LOCATION - SAFETY ANGLES NOT SHOWN FOR CLARITY)

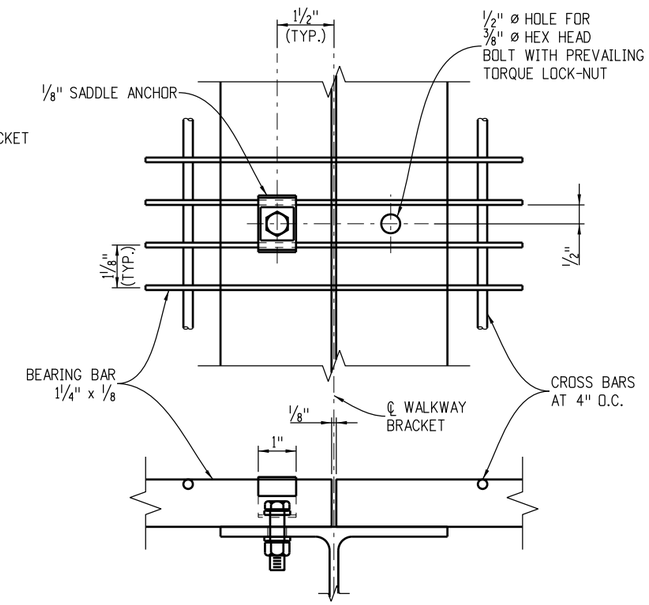

WALKWAY DETAILS

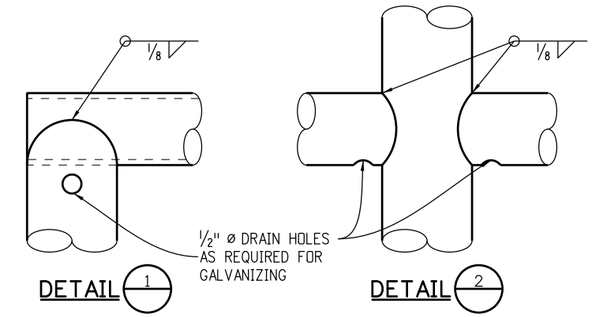

NOTES

ALTERNATIVE VENTING METHODS MAY BE USED IF APPROVED BY THE ENGINEER

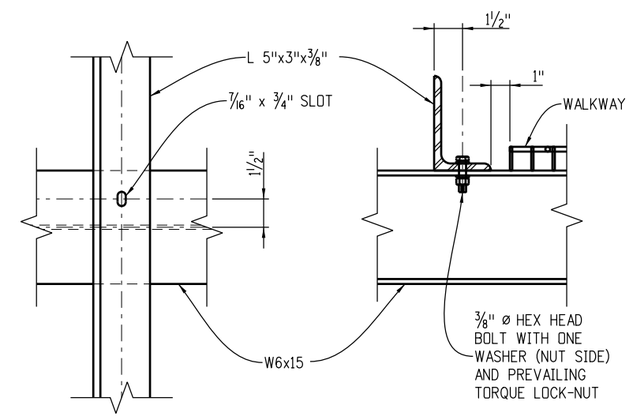

SAFETY ANGLE DETAILS

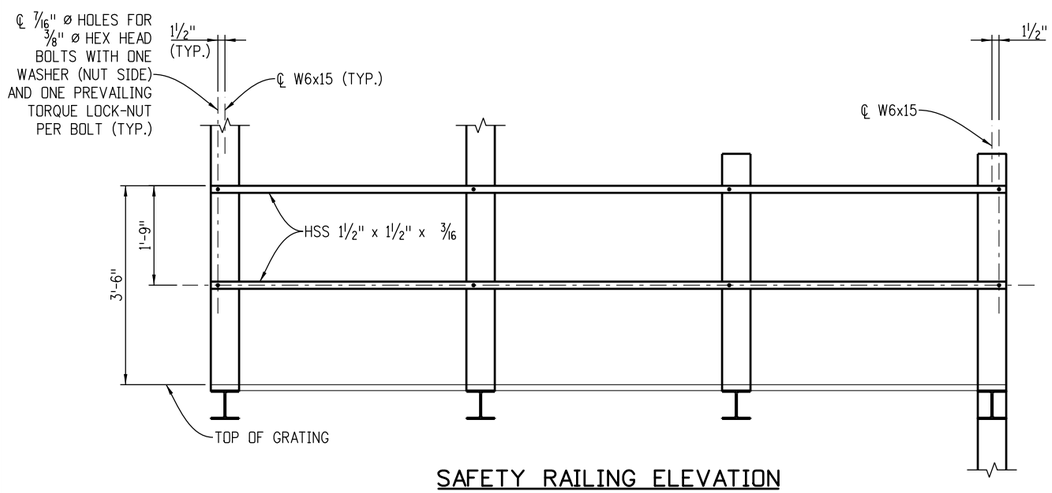

SAFETY RAILING ELEVATION

(INSIDE SAFETY RAILING LOCATION - SAFETY ANGLES NOT SHOWN FOR CLARITY)

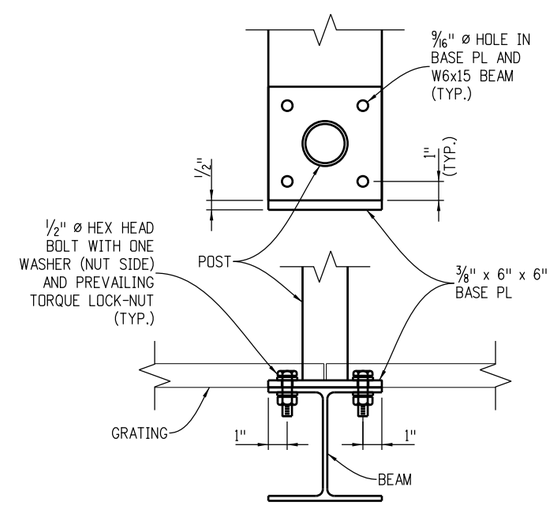

DETAIL 3

NOTES

1. WELDED TYPE GRATING SHALL HAVE 1 ¼" x ⅛" BEARING BARS AT 1 ⅛" CENTERS WITH ¼" DIAMETER (OR EQUAL) CROSS BARS AT 4" CENTERS. IF MECHANICAL LOCK GRATING IS USED, IT SHALL BE EQUAL IN STRENGTH TO THE WELDED TYPE. ALTERNATE HOLD-DOWN CLIPS MAY BE SUBMITTED FOR APPROVAL.
2. WALKWAY GRATING TO BE CONTINUOUS (NO SPLICES) OVER AS MANY WALKWAY BRACKETS AS PRACTICAL CONSISTENT WITH FABRICATION, EASE OF HANDLING AND ASSEMBLY.
3. ALL BOLTS SHOWN ON THIS SHEET SHALL BE ASTM A-307. THE TIGHTENING TORQUE IS 16 FT-LBS. FOR ⅜" ø BOLTS AND 40 FT-LBS. FOR 1/2 " ø BOLTS. DO NOT OVER TIGHTEN BOLTS AT WALKWAY SADDLE ANCHOR LOCATIONS.

Computer File Information		
Creation Date: 07-04-12	Initials: JRM	
Last Modification Date: 07-04-12	Initials: JRM	R-X
Full Path: www.coloradodot.info/business/designsupport		R-X
Drawing File Name: S-614-60_09of14.dgn		R-X
CAD Ver.: MicroStation V8 Scale: Not to Scale Units: English		R-X

Sheet Revisions	
Date:	Comments

Colorado Department of Transportation
4201 East Arkansas Avenue
Denver, Colorado 80222
Phone: (303) 757-9543
Fax: (303) 757-9219
Safety & Traffic Engineering Branch

KCM/RLO

DYNAMIC SIGN MONOTUBE STRUCTURES

Issued By: Safety and Traffic Engineering Branch on July 4, 2012

STANDARD PLAN NO.

S-614-60

-BUTTERFLY INSTALLATION DETAILS-

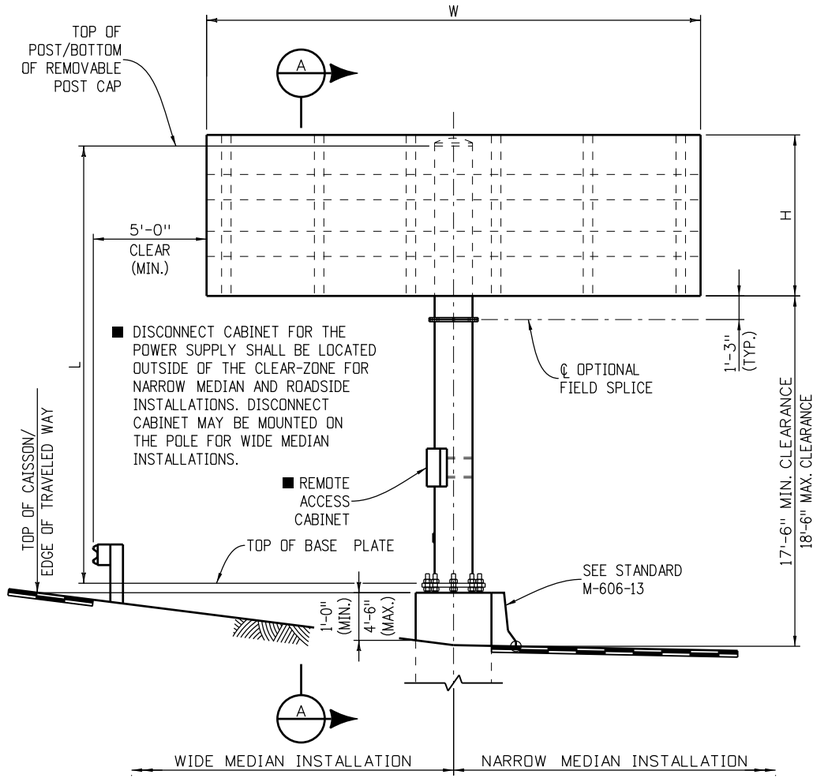

ELEVATION
(MEDIAN INSTALLATION)

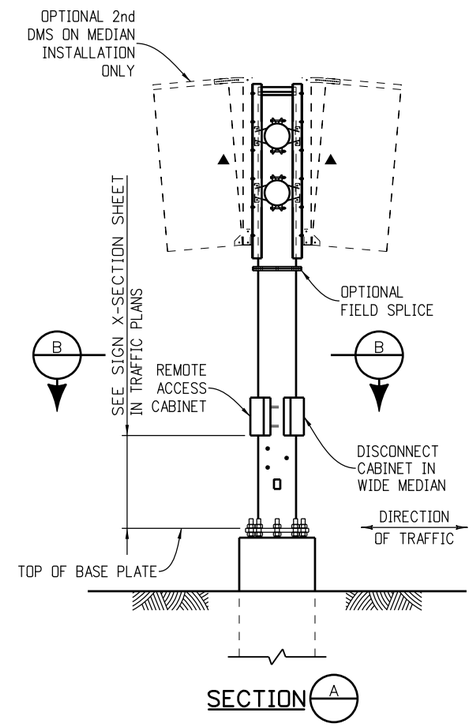

SECTION A

▲ PROVIDE OSHA COMPLIANT ANCHORAGE POINT AS DIRECTED BY THE ENGINEER. SEE SHEETS 3 & 4 FOR MOUNTING INFORMATION.

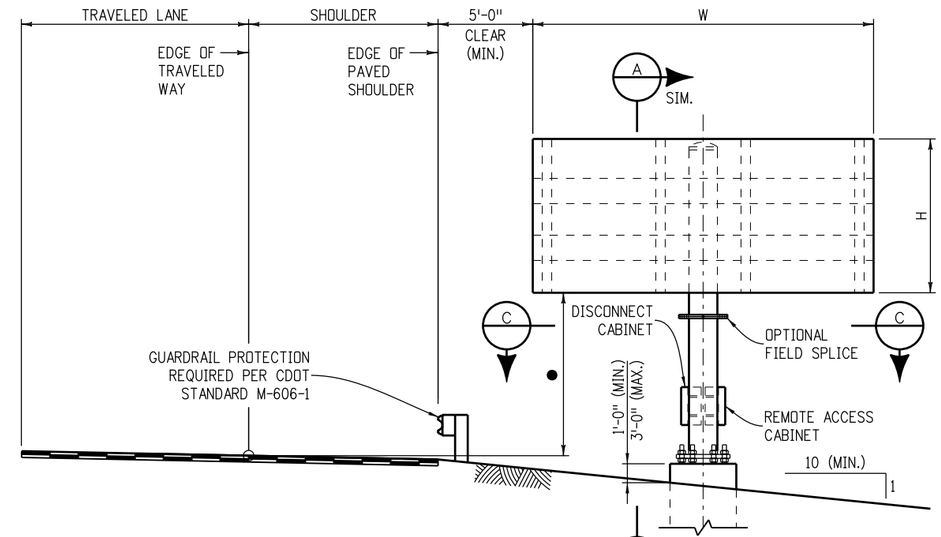

ELEVATION
(ROADSIDE INSTALLATION)
● 7'-0" MIN. OR AS PER THE BUTTERFLY SIGN X-SECTION SHEET

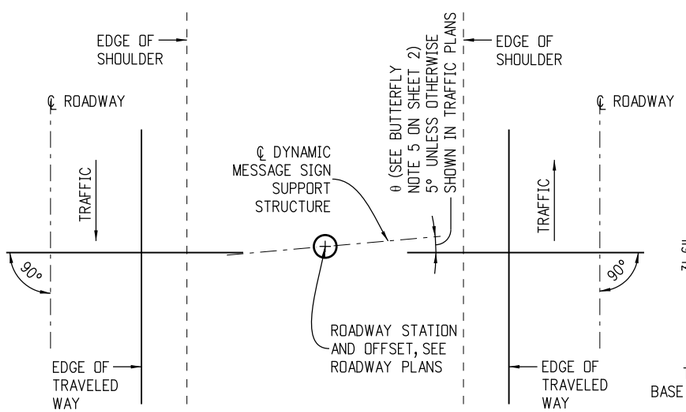

MEDIAN INSTALLATION PLAN

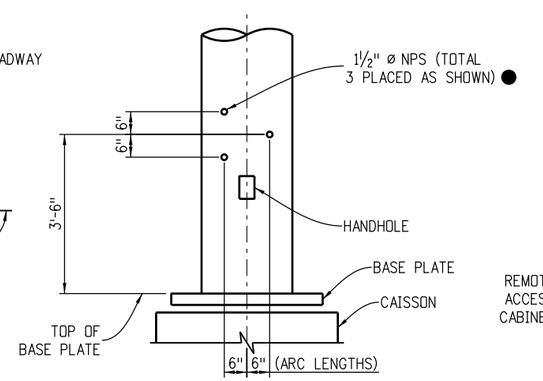

CONDUIT PENETRATION DETAILS
● PLUG WITH RECESSED PIPE PLUGS

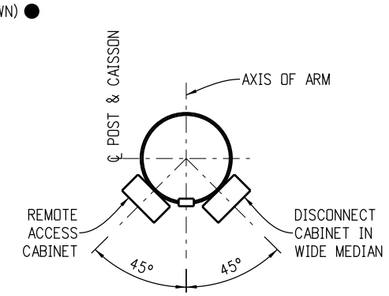

SECTION B

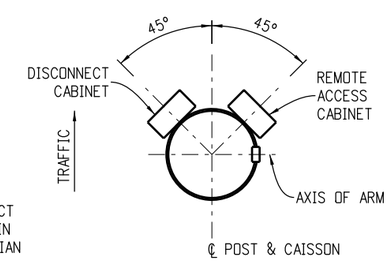

SECTION C

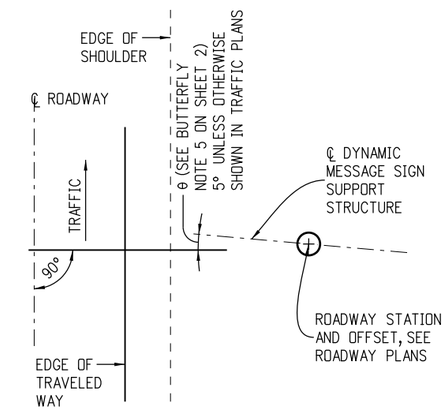

ROADSIDE INSTALLATION PLAN

Computer File Information		Sheet Revisions	
Creation Date: 07-04-12 Initials: JRM		Date:	Comments
Last Modification Date: 07-04-12 Initials: JRM	R-X		
Full Path: www.coloradodot.info/business/designsupport	R-X		
Drawing File Name: S-614-60_10of14.dgn	R-X		
CAD Ver.: MicroStation V8 Scale: Not to Scale Units: English	R-X		

Colorado Department of Transportation
4201 East Arkansas Avenue
Denver, Colorado 80222
Phone: (303) 757-9543
Fax: (303) 757-9219
Safety & Traffic Engineering Branch KCM/RLO

DYNAMIC SIGN MONOTUBE STRUCTURES

Issued By: Safety and Traffic Engineering Branch on July 4, 2012

STANDARD PLAN NO.
S-614-60
Sheet No. 10 of 14

-BUTTERFLY ASSEMBLY DETAILS-

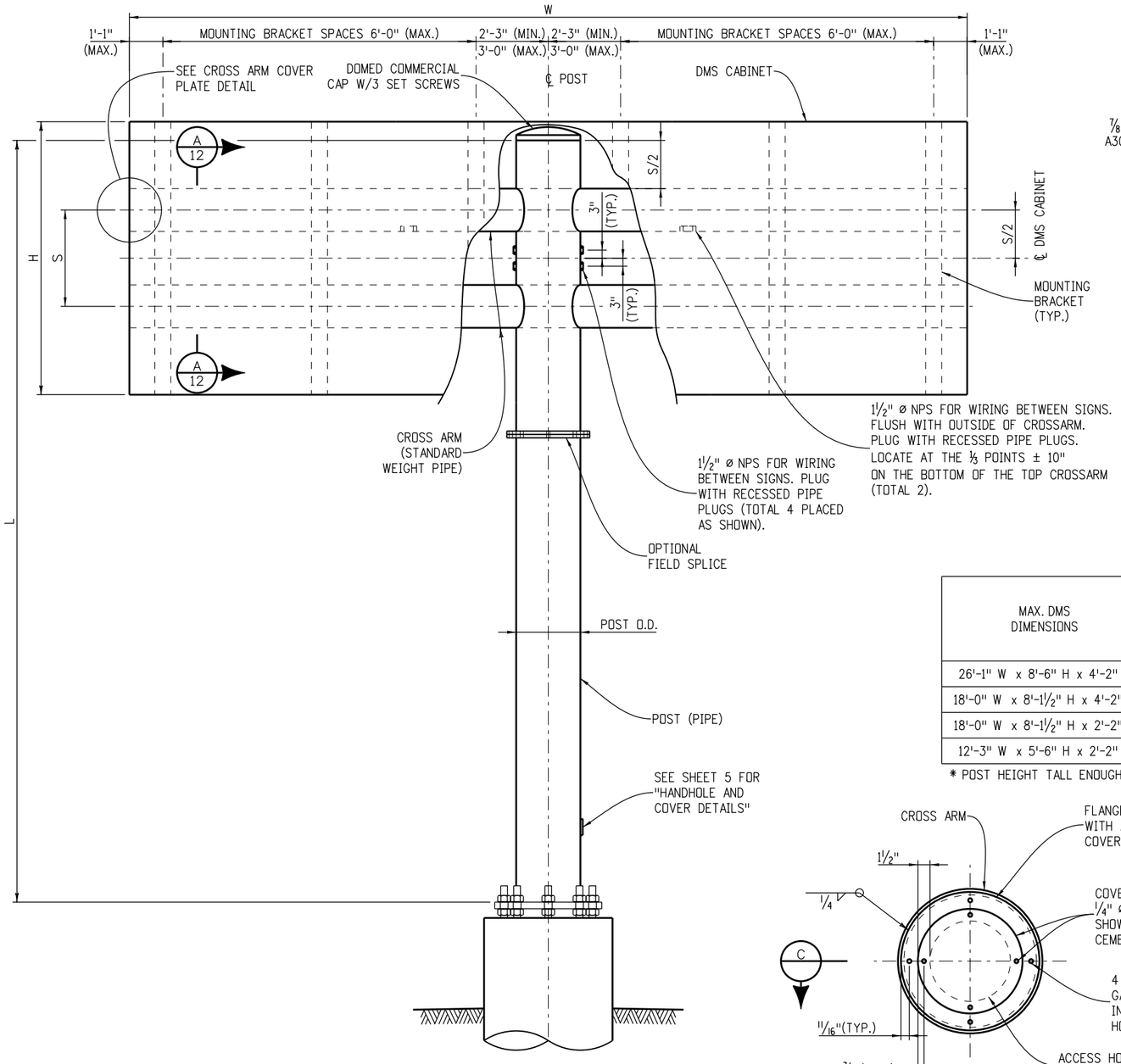

ELEVATION

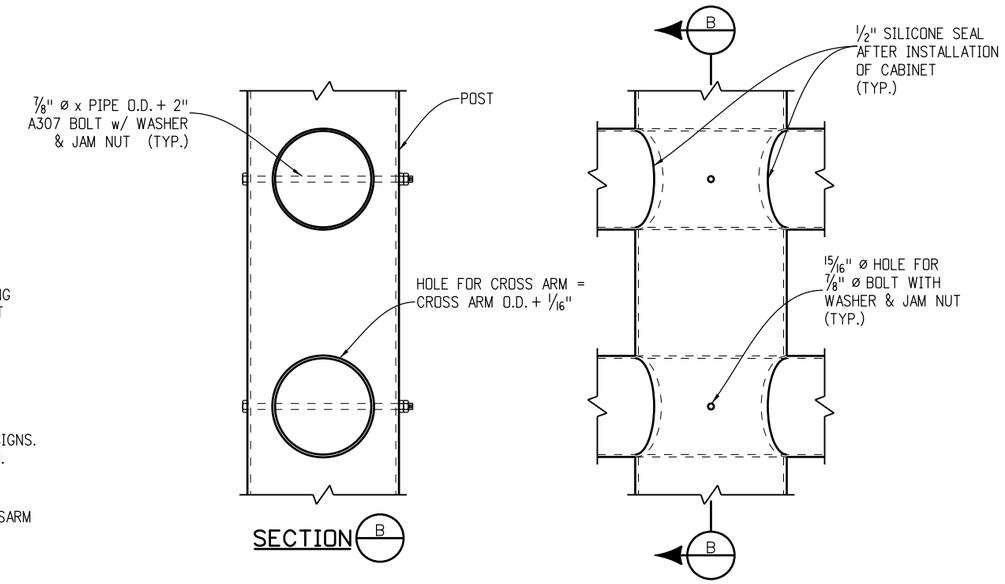

SECTION B

ARMS TO POST CONNECTION

MAX. DMS DIMENSIONS	MAX. DMS WEIGHT	POST PIPE DATA			CROSS ARM PIPE DATA			
		PIPE O.D. (IN)	MIN. WALL THICKNESS (IN)	MAX. POST HEIGHT (FT) "L"	PIPE O.D. (IN)	MIN. WALL THICKNESS (IN)	CROSS ARM LENGTH (FT) "W"	CROSS ARM SPACING (FT) "S"
26'-1" W x 8'-6" H x 4'-2" D	4100 LBS.	24.0	0.50	24.0 *	16.0	0.375	26.0	3.0
18'-0" W x 8'-1½" H x 4'-2" D	3000 LBS.	18.0	0.50	17.0	12.75	0.375	18.0	3.0
18'-0" W x 8'-1½" H x 2'-2" D	2280 LBS.	18.0	0.375	17.0	12.75	0.375	18.0	3.0
12'-3" W x 5'-6" H x 2'-2" D	1520 LBS.	18.0	0.375	14.0	12.75	0.375	12.25	2.5

* POST HEIGHT TALL ENOUGH TO ACCOMMODATE TRAFFIC UNDERNEATH SIGN.

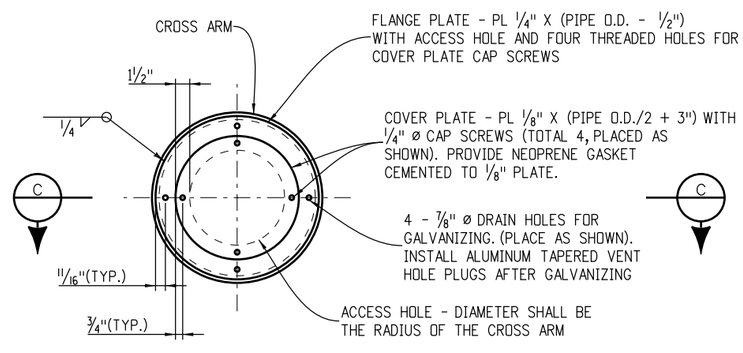

CROSS ARM COVER PLATE DETAIL

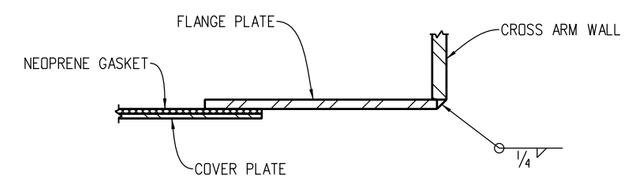

SECTION C

Computer File Information		
Creation Date: 07-04-12	Initials: JRM	
Last Modification Date: 07-04-12	Initials: JRM	R-X
Full Path: www.coloradodot.info/business/designsupport		R-X
Drawing File Name: S-614-60_11of15.dgn		R-X
CAD Ver.: MicroStation V8 Scale: Not to Scale Units: English		R-X

Sheet Revisions	
Date:	Comments

Colorado Department of Transportation
4201 East Arkansas Avenue
Denver, Colorado 80222
Phone: (303) 757-9543
Fax: (303) 757-9219
Safety & Traffic Engineering Branch

KCM/RLO

DYNAMIC SIGN MONOTUBE STRUCTURES

Issued By: Safety and Traffic Engineering Branch on July 4, 2012

STANDARD PLAN NO.

S-614-60

-BUTTERFLY SIGN MOUNTING DETAILS-

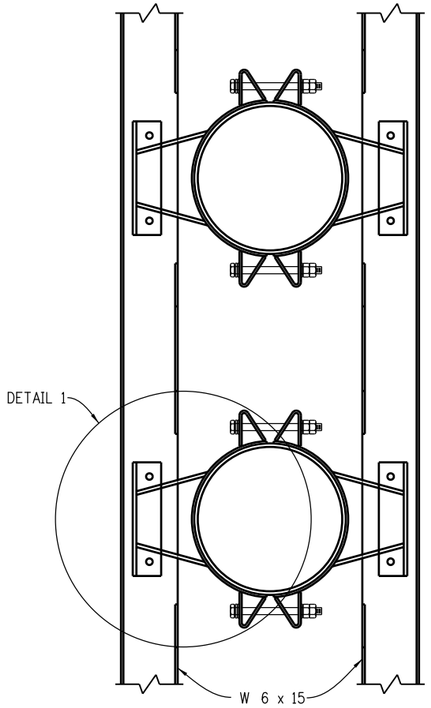

SECTION A/11

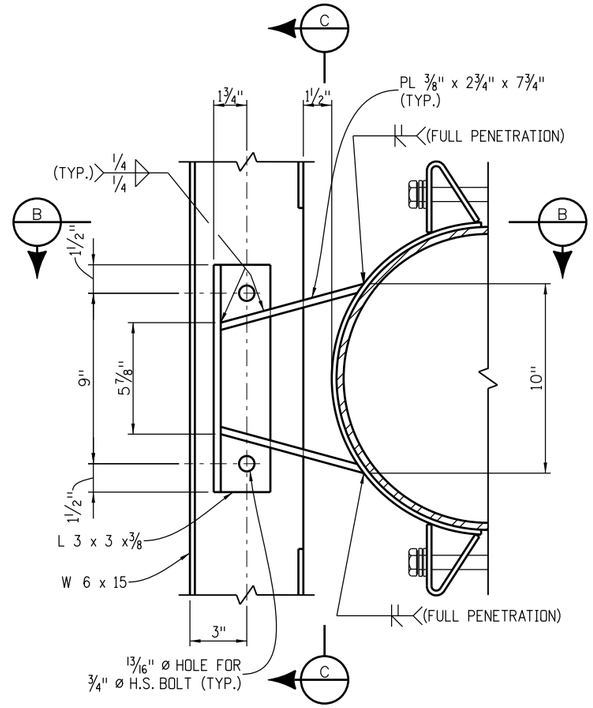

DETAIL 1

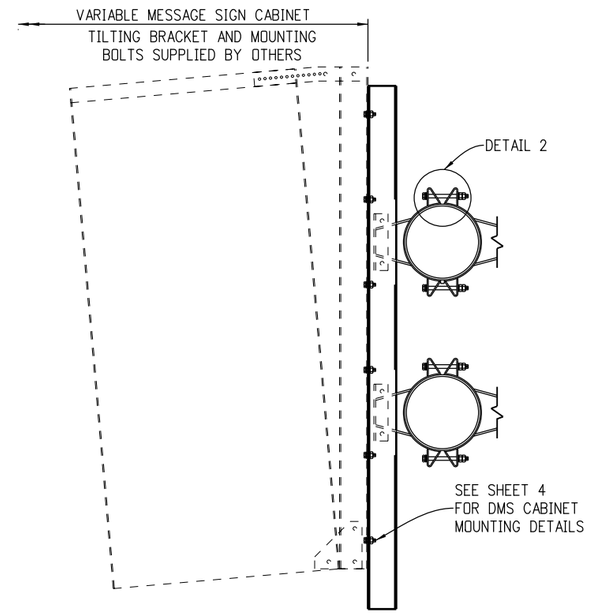

TYPICAL BRACKET CONNECTION

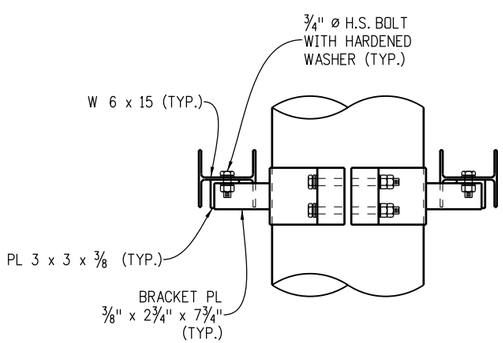

SECTION B

SEE DETAIL 2 FOR CLAMP DETAILS.

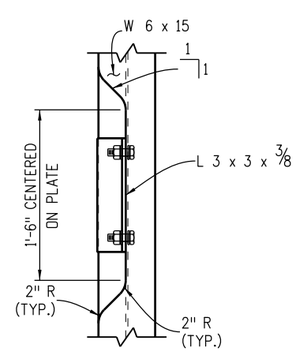

SECTION C

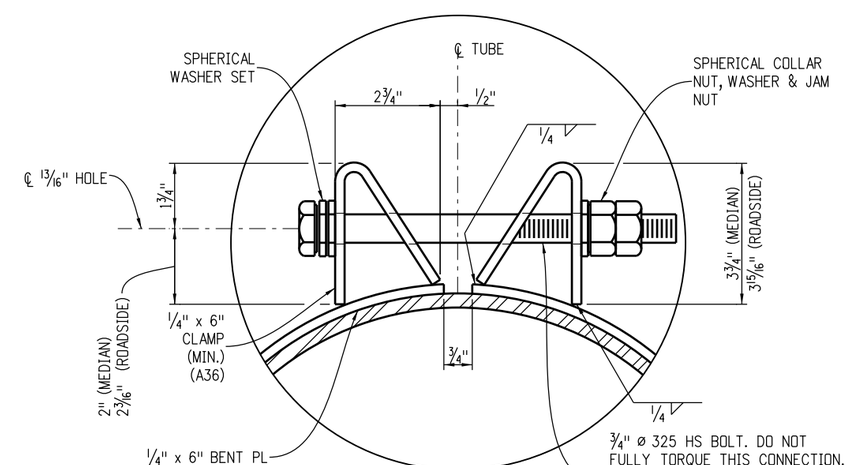

DETAIL 2

Computer File Information		
Creation Date: 07-04-12	Initials: JRM	
Last Modification Date: 07-04-12	Initials: JRM	R-X
Full Path: www.coloradodot.info/business/designsupport		R-X
Drawing File Name: S-614-60_12of14.dgn		R-X
CAD Ver.: MicroStation V8 Scale: Not to Scale	Units: English	R-X

Sheet Revisions	
Date:	Comments

Colorado Department of Transportation
4201 East Arkansas Avenue
Denver, Colorado 80222
Phone: (303) 757-9543
Fax: (303) 757-9219
Safety & Traffic Engineering Branch

KCM/RLO

DYNAMIC SIGN MONOTUBE STRUCTURES

Issued By: Safety and Traffic Engineering Branch on July 4, 2012

STANDARD PLAN NO.

S-614-60

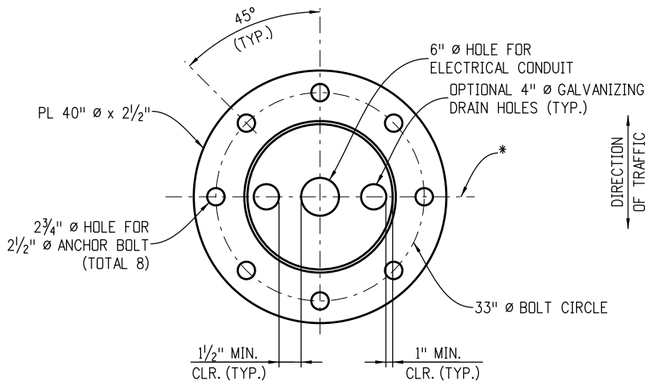

BASE PLATE DETAIL
24" PIPE POST

* CENTERLINE OF DYNAMIC MESSAGE SIGN SUPPORT STRUCTURE, SEE SHEET 10.

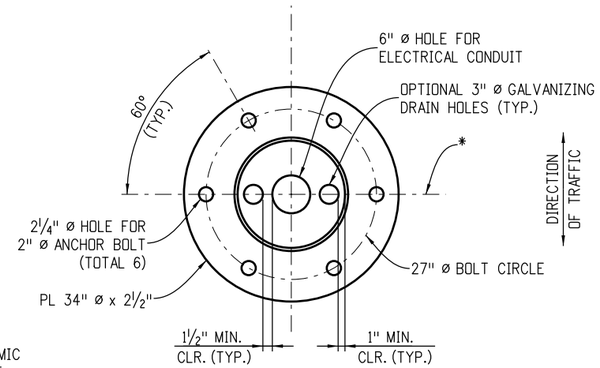

BASE PLATE DETAIL
18" PIPE POST

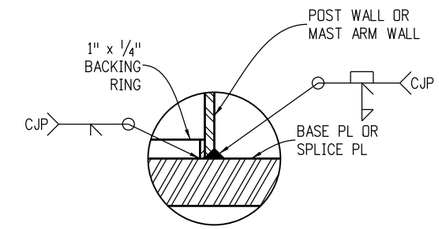

DETAIL 1

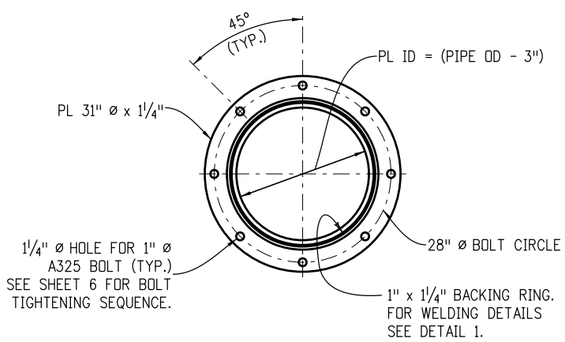

OPTIONAL FIELD SPLICE
24" PIPE POST

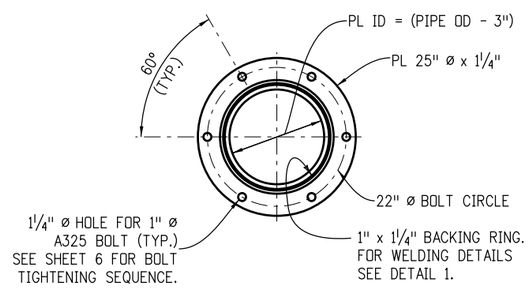

OPTIONAL FIELD SPLICE
18" PIPE POST

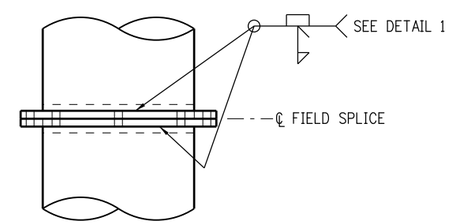

OPTIONAL FIELD SPLICE

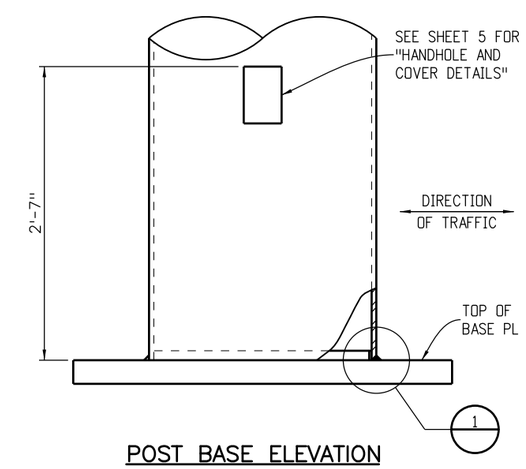

POST BASE ELEVATION

Computer File Information		
Creation Date: 07-04-12	Initials: JRM	
Last Modification Date: 07-04-12	Initials: JRM	R-X
Full Path: www.coloradodot.info/business/designsupport		R-X
Drawing File Name: S-614-60_13of14.dgn		R-X
CAD Ver.: MicroStation V8 Scale: Not to Scale Units: English		R-X

Sheet Revisions	
Date:	Comments

Colorado Department of Transportation
4201 East Arkansas Avenue
Denver, Colorado 80222
Phone: (303) 757-9543
Fax: (303) 757-9219
Safety & Traffic Engineering Branch KCM/RLO

DYNAMIC SIGN MONOTUBE STRUCTURES

Issued By: Safety and Traffic Engineering Branch on July 4, 2012

STANDARD PLAN NO.
S-614-60

-FOUNDATION & ANCHOR BOLT DETAILS-

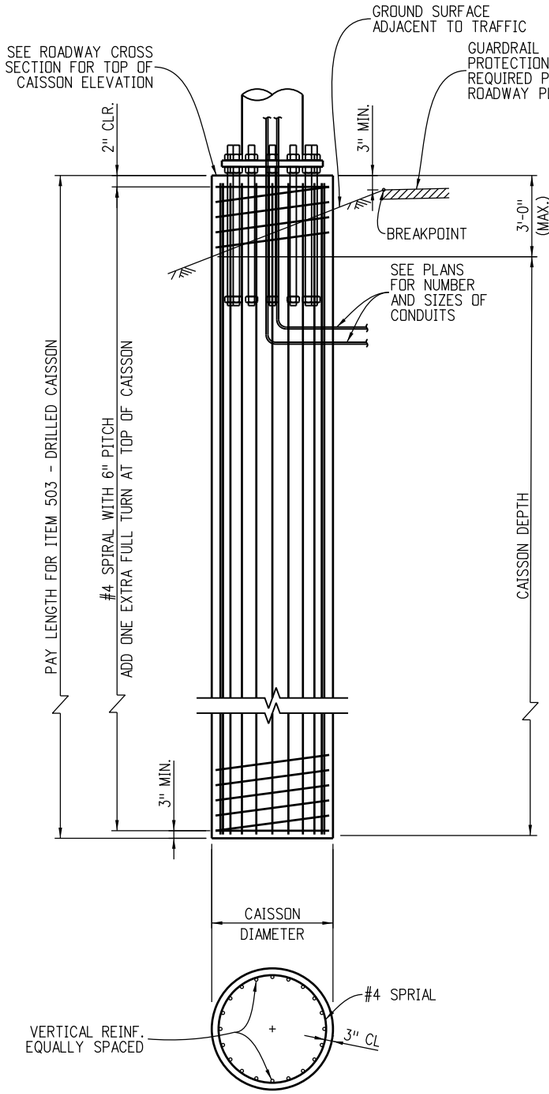

ROADSIDE SHOULDER INSTALLATION

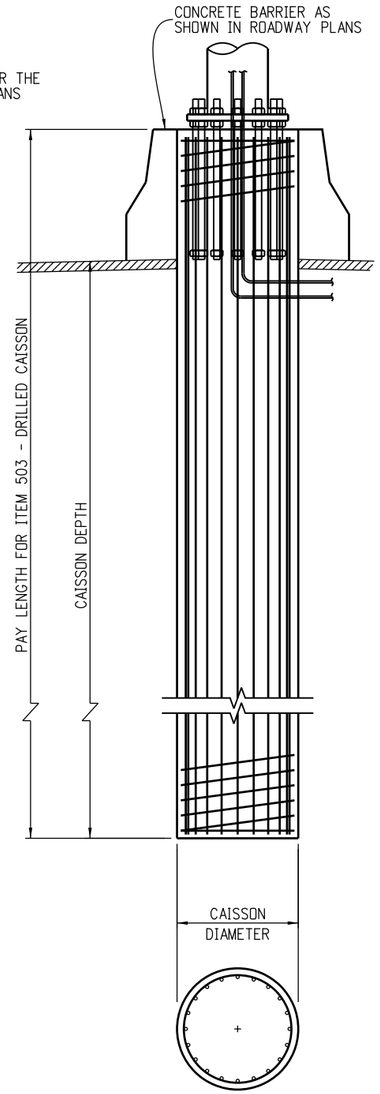

MEDIAN RAIL INSTALLATION
(SEE ROADSIDE SHOULDER INSTALLATION FOR ADDITIONAL INFORMATION)

CAISSON FOUNDATION DETAILS

STRUCTURE TYPE	PIPE O.D. (IN)	CAISSON DIAMETER (IN)	CAISSON DEPTH (FT)	VERTICAL REINF.
CANTILEVER	24	48	29	18 - #9
BUTTERFLY	24	48	21	18 - #9
BUTTERFLY	18	42	16	14 - #9

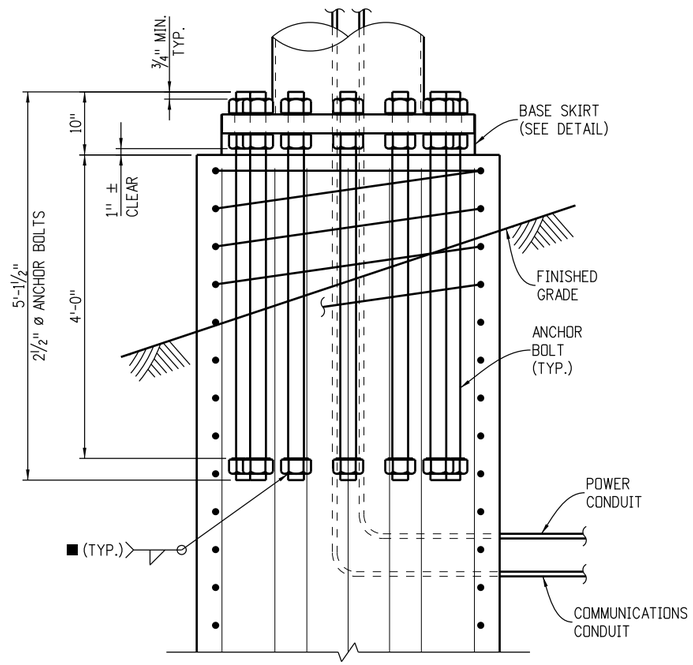

ANCHOR BOLT DETAIL

■ WELDING PROCEDURE IS NOT REQUIRED FOR THIS WELD

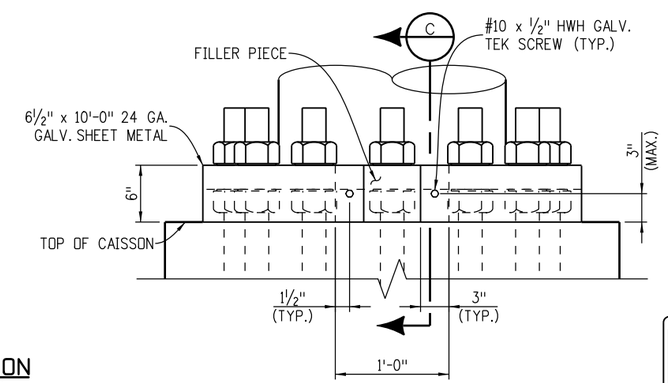

BASE SKIRT DETAIL

NOTE: USE BAND-IT STRAPS TO TIGHTEN SKIRT ONTO BASE PLATE PRIOR TO INSTALLING SELF TAPPING SCREWS.

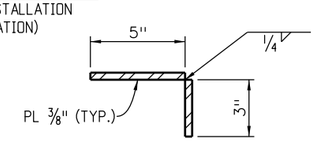

SECTION B

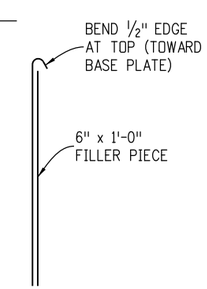

SECTION C

CAISSON DRILLING AND INSTALLATION NOTES

1. CAISSONS SHALL BE PLACED AGAINST UNDISTURBED EARTH. WET OR CAVING HOLES SHALL BE BACKFILLED WITH FLOW-FILL AND REDRILLED AFTER A THREE DAY CURING PERIOD WITHOUT THE USE OF A CASING.
2. THE DESIGN HEREIN ASSUMES THAT DMS SUPPORTS ARE INSTALLED WITHIN THE ROADWAY PRISM WITH THE FOLLOWING SOIL PARAMETERS:

   SOIL DENSITY = 110 LB./CU. FT.
   SOIL COHESION = 750 LB./SQ. FT. FOR MEDIUM STIFF COHESIVE SOIL
   SOIL Φ ANGLE = 30° FOR MEDIUM DENSE COHESIONLESS SOIL
   SF = 3.0 FOR FLEXURAL RESISTANCE.
3. CONTACT THE ENGINEER IF ANY OF THE FOLLOWING SOIL CONDITIONS ARE ENCOUNTERED DURING DRILLING:
   (A) DMS SUPPORT WILL NOT BE INSTALLED WITHIN THE ROADWAY PRISM.
   (B) THE SOIL HAS A HIGH ORGANIC CONTENT OR CONSISTS OF SATURATED SILT AND CLAY.
   (C) THE SITE WON'T SUPPORT THE WEIGHT OF THE DRILLING RIG.
   (D) THE FOUNDATION SOILS ARE NOT HOMOGENOUS.
   (E) FIRM BEDROCK IS ENCOUNTERED.
   (F) HIGH GROUNDWATER IS ENCOUNTERED.
   (G) LARGE BOULDERS ARE ENCOUNTERED.
4. THE CONTRACTOR SHALL PROVIDE A SURVEY OF THE DMS FOUNDATION TO VERIFY PLACEMENT SOON AFTER WORK ON THE FOUNDATION HAS BEEN COMPLETED. THE SURVEY SHALL CONFORM TO THE REQUIREMENTS OF SECTION 625, CONSTRUCTION SURVEYING. THE CONTRACTOR SHALL SUBMIT TO THE ENGINEER A COPY OF THE SURVEY NOTES DETAILING THE FOUNDATION LOCATION AND ELEVATION AND THE ANCHOR BOLT LOCATIONS, PROJECTIONS, AND ORIENTATIONS. THE ELEVATION OF THE GROUND SURROUNDING THE FOUNDATION SHALL ALSO BE PROVIDED. THE CONTRACTOR SHALL COMPARE THE SURVEY INFORMATION TO THE REVIEWED SHOP DRAWINGS AND RECONCILE ANY DIFFERENCES BETWEEN THEM. THE CONTRACTOR SHALL SUBMIT ALL PROPOSED ADJUSTMENTS OR MODIFICATIONS TO THE ENGINEER FOR APPROVAL.

NOTES

1. THREAD UPPER 10" AND GALVANIZE UPPER 1'-3" OF THE ANCHOR BOLTS.
2. ANCHOR BOLTS SHALL BE SET WITH A STEEL TEMPLATE UNTIL THE CONCRETE HAS CURED AT LEAST TWO DAYS.
3. THERE SHALL BE NO GROUT PAD INSTALLED ON TOP OF THE EXISTING FOUNDATIONS.
4. THE ANCHOR BOLTS SHALL BE TIGHTENED USING THE TURN-OF-NUT METHOD. THE BOLTS SHALL FIRST BE TIGHTENED TO SNUG TIGHT, WHICH IS DEFINED AS THE TIGHTNESS THAT EXISTS WHEN THE UPPER AND LOWER NUTS ARE IN FIRM CONTACT WITH THE BASE PLATE. WITH THE MAST ARM FREE TO DEFLECT, THE UPPER AND LOWER NUTS SHALL EACH THEN BE ROTATED AN ADDITIONAL 1/12 TURN (30° ± 5°) USING A SLUGGING WRENCH.

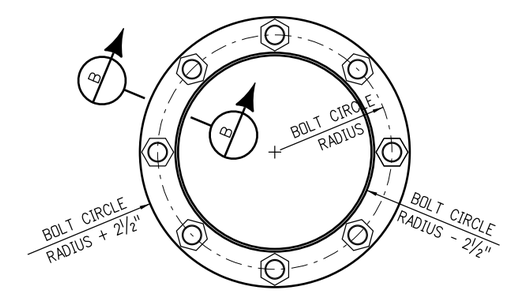

BOLT TEMPLATE

Computer File Information		
Creation Date: 07-04-12	Initials: JRM	
Last Modification Date: 07-04-12	Initials: JRM	R-1
Full Path: www.coloradodot.info/business/designsupport		R-X
Drawing File Name: S-614-60_14of14 REV1.dgn		R-X
CAD Ver.: MicroStation V8 Scale: Not to Scale Units: English		R-X

Sheet Revisions	
Date:	Comments
06-17-16	ADD BASE SKIRT DETAILS AND NOTE
	FOR ANCHOR BOLTS EXTEND FROM NUT

Colorado Department of Transportation
4201 East Arkansas Avenue
Denver, Colorado 80222
Phone: (303) 757-9543
Fax: (303) 757-9219
Safety & Traffic Engineering Branch

KCM/RLO

DYNAMIC SIGN MONOTUBE STRUCTURES

Issued By: Safety and Traffic Engineering Branch on July 4, 2012

STANDARD PLAN NO.
S-614-60
Sheet No. 14 of 14