MAST ARM LENGTH (FT.)	POLE BASE CONNECTION DATA																	CAISSON DATA (FOR SINGLE AND DOUBLE ARM INSTALLATIONS)				
	STIFFENER								BASE PLATE		ANCHOR BOLT										V BARS	
	NO. OF	THK. (IN.)	WIDTH (IN.)	HEIGHT (IN.)	RADIUS (IN.)	ANGLE	WALL WELD (IN.)	PLATE WELD (IN.)	DIA. (IN.)	THK. (IN.)	NO. OF	DIA. (IN.)	LENGTH (IN.)	CIRCLE DIA. (IN.)	HOLE DIA. (IN.)	ANGLE	PROJECTION (IN.)	DIA. (IN.)	DEPTH (D) (FT.)	PAY LGTH (L) (FT.)	SIZE	TOTAL
30	6	0.75	5.0	10	10.600	30.0°	0.25	0.625	24	2.25	6	2.0	63	17.75	2.25	60.0°	11.25	36	12.5	13	#9	11
40	6	0.75	5.5	11	11.841	30.0°	0.25	0.625	27	2.50	6	2.0	63	21.00	2.25	60.0°	11.50	36	14.5	15	#9	11
50	6	0.75	6.5	13	14.327	30.0°	0.25	0.625	32	2.75	6	2.0	63	25.00	2.25	60.0°	11.75	42	16.5	17	#9	14
65	6	0.75	8.0	16	18.063	30.0°	0.25	0.625	39	3.00	6	2.5	63	30.25	2.75	60.0°	12.50	48	20.5	21	#9	18
75	6	0.75	8.5	17	19.309	30.0°	0.25	0.625	42	3.25	6	2.5	63	33.00	2.75	60.0°	12.75	54	20.5	21	#9	23

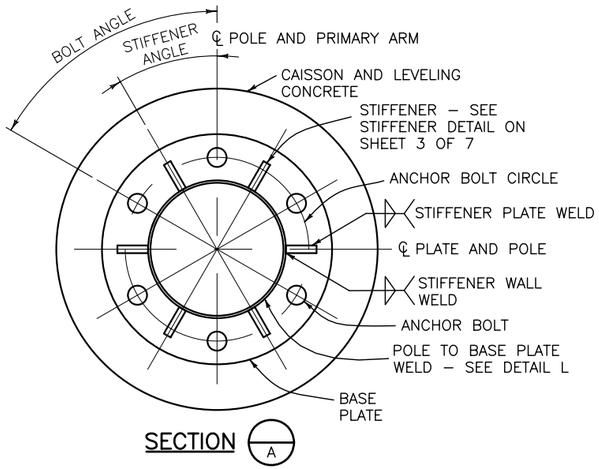

SECTION A

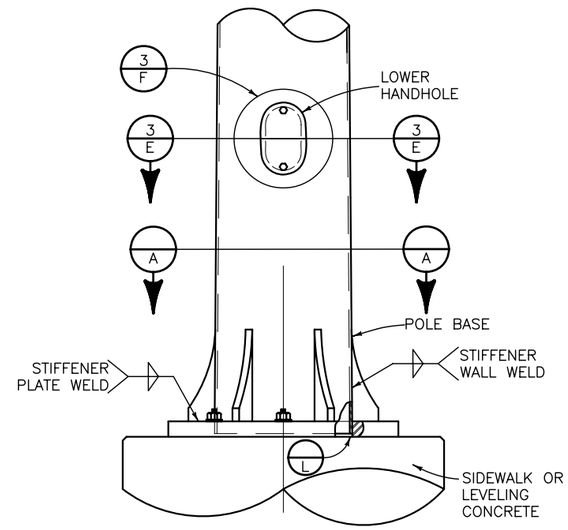

BASE PLATE DETAIL

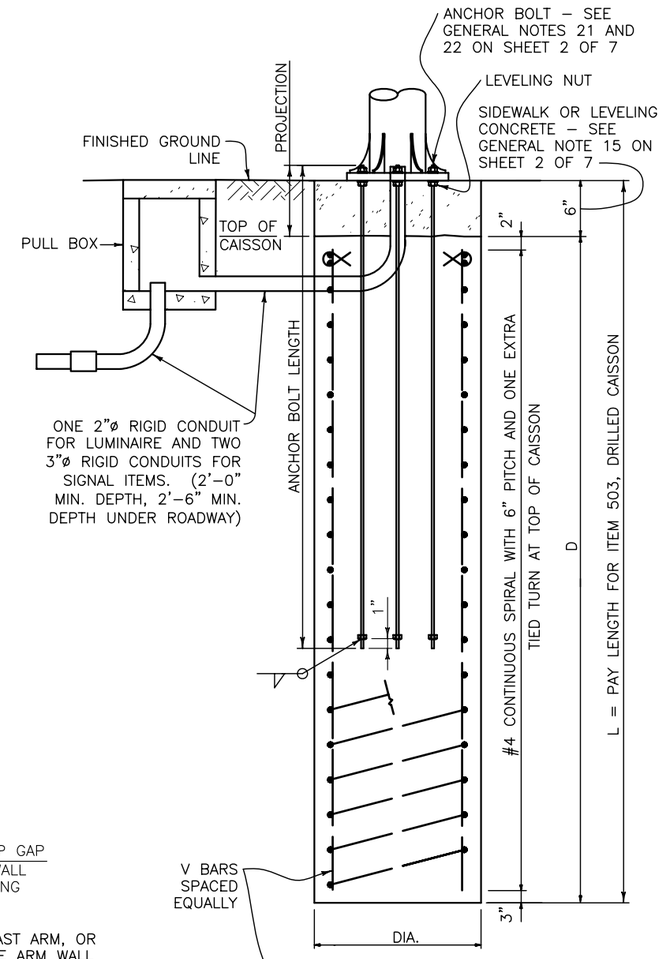

TRAFFIC SIGNAL POLE CAISSON

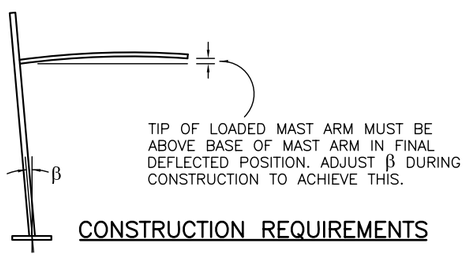

TIP OF LOADED MAST ARM MUST BE ABOVE BASE OF MAST ARM IN FINAL DEFLECTED POSITION. ADJUST β DURING CONSTRUCTION TO ACHIEVE THIS.

CONSTRUCTION REQUIREMENTS

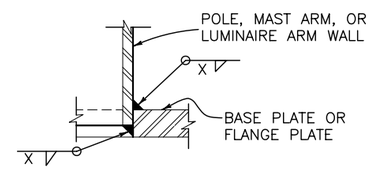

SOCKET WELD

X = 3/16" FOR LUMINAIRE ARMS AND 1/4" FOR POLES. SEE TABLE ON SHEET 3 OF 7 FOR MAST ARMS.

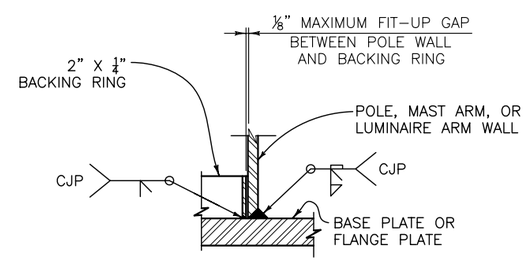

BACKING RING WELD

DETAIL L 3 L

Computer File Information		
Creation Date: 07-04-06	Initials: JSV	
Last Modification Date: 07-04-06	Initials: RO	R-X
Full Path:www.dot.state.co.us/DesignSupport/		R-X
Drawing File Name: S614400607.dwg		R-X
CAD Ver.: ACAD 2004	Scale: Not to Scale Units: English	R-X

Sheet Revisions	
Date:	Comments

Colorado Department of Transportation
4201 East Arkansas Avenue
Denver, Colorado 80222
Phone: (303) 757-9543
Fax: (303) 757-9820
Safety & Traffic Engineering Branch KCM

TYPICAL TRAFFIC SIGNAL INSTALLATION DETAILS

Issued By: Traffic Engineering Unit July 4, 2006

STANDARD PLAN NO.

S-614-40