MAST ARM LENGTH (FT.)	BLIND BOLT DATA				BUILT-UP BOX DATA *					POLE DATA							
					THICKNESS OF BOX PLATES U.O.N. (IN.)	POLE WELD (IN.)	SIDE PLATE	TOP PLATE	BOTTOM PLATE	BASE SECTION				END SECTION ◆ WITH LUMINAIRE			
	NO. OF	DIA. (IN.)	BOLTS PER ROW	NO. OF ROWS			H (IN.)	WIDTH FOR Θ = 45° (IN.)	WIDTH FOR Θ = 45° (IN.)	LENGTH (FT.)	TOP ø (IN.)	BOTTOM ø (IN.)	THK. (IN.)	LENGTH (FT.)	TOP ø (IN.)	BOTTOM ø (IN.)	THK. (IN.)
30	24	0.75	6	4	1.50	0.1875	22	23.75	26.053	22.29	9.11	12.23	0.3125	20.54	7.25	10.13	0.2391
40	30	0.75	6	5	2.00	0.1875	25	26.75	29.367	22.67	11.81	14.98	0.3125	20.71	10.00	12.90	0.2391
50	36	0.75	12	3	2.50	0.1875	26	27.75	30.471	22.33	14.86	17.98	0.3125	20.79	13.00	15.91	0.2391
65	48	0.75	12	4	2.75	0.1875	31	32.75	35.995	22.77	18.54	21.73	0.3125	21.02	16.75	19.69	0.2391
75	60	0.75	12	5	3.00	0.1875	33	34.75	38.204	23.08	20.75	23.98	0.3125	21.12	19.00	21.96	0.2391

* USE LARGER ARM IN A DOUBLE ARM SIGNAL TO DETERMINE PLATE THICKNESS AND DIMENSIONS.
◆ SEE GENERAL NOTE 31 ON SHEET 2 OF 7.

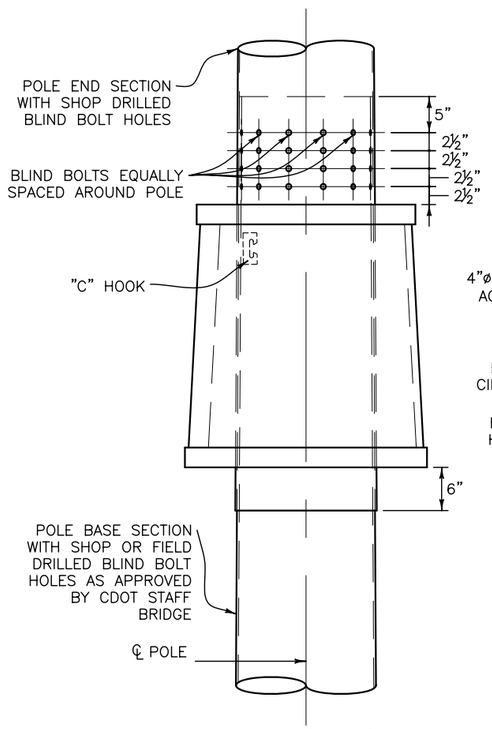

POLE END SECTION
SLIP CONNECTION DETAIL

(SEE GENERAL NOTE 8 ON SHEET 2 OF 7 REGARDING THE NEED FOR BLIND BOLTS)

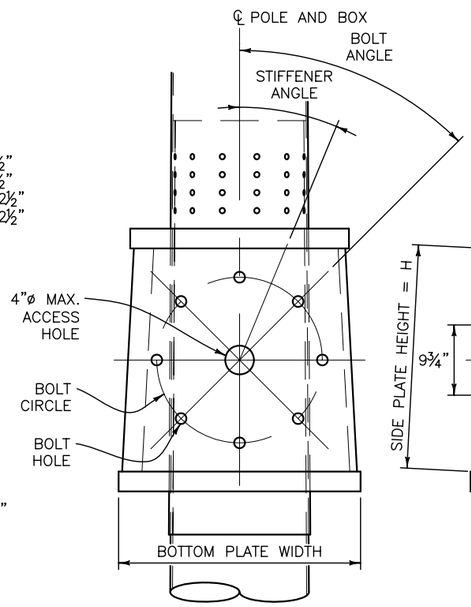

SECTION B

FOR 8 BOLTS AND Θ < 45°, ROTATE FLANGE FOR SECONDARY ARM 22.5° TO AVOID BOLT INTERFERENCE PROBLEMS.

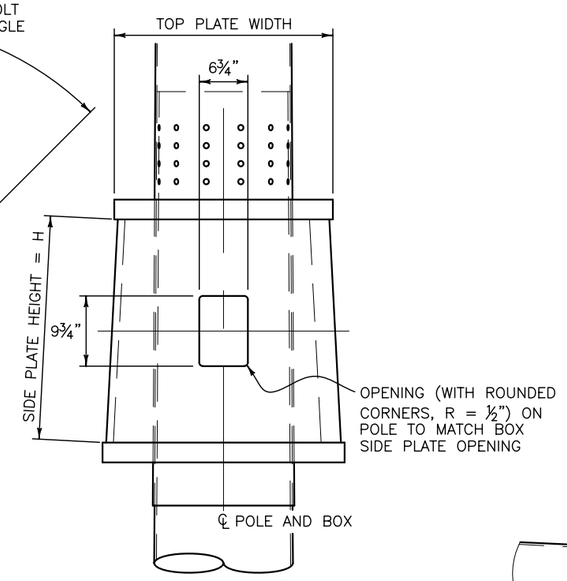

SECTION C

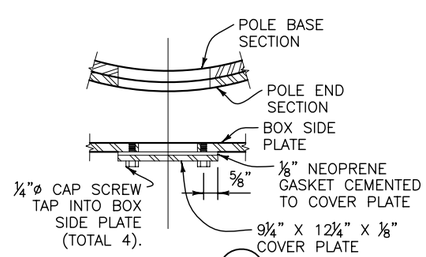

SECTION E

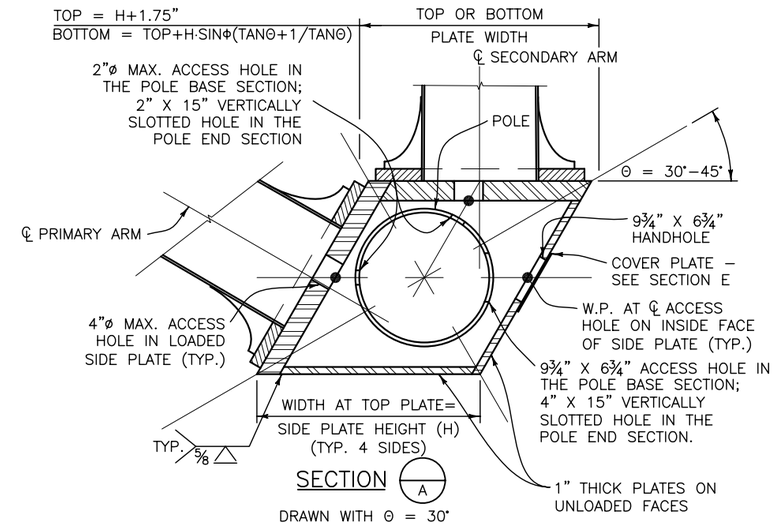

SECTION A

DRAWN WITH Θ = 30°

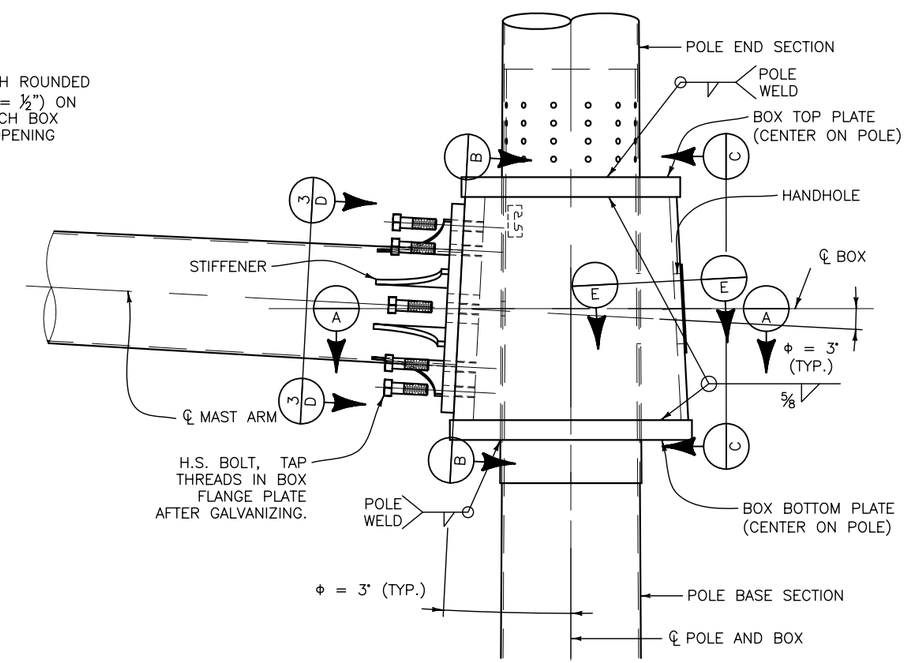

MAST ARM CONNECTION DETAIL

Computer File Information		
Creation Date: 07-04-06	Initials: JSV	
Last Modification Date: 07-04-06	Initials: RO	R-X
Full Path:www.dot.state.co.us/DesignSupport/		R-X
Drawing File Name: S614400407.dwg		R-X
CAD Ver.: ACAD 2004	Scale: Not to Scale Units: English	R-X

Sheet Revisions	
Date:	Comments

Colorado Department of Transportation
4201 East Arkansas Avenue
Denver, Colorado 80222
Phone: (303) 757-9543
Fax: (303) 757-9820
Safety & Traffic Engineering Branch KCM

TYPICAL TRAFFIC SIGNAL INSTALLATION DETAILS

Issued By: Traffic Engineering Unit July 4, 2006

STANDARD PLAN NO.
S-614-40
Sheet No. 4 of 7