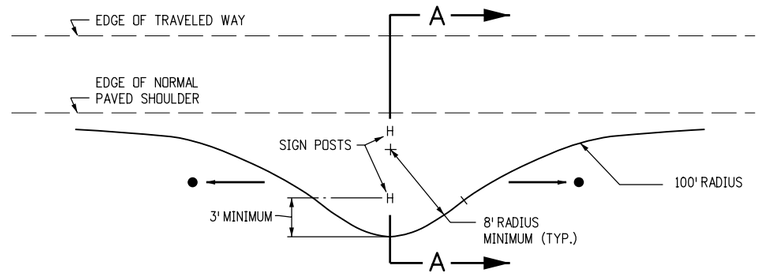

TYPICAL SIGN ISLAND PLAN

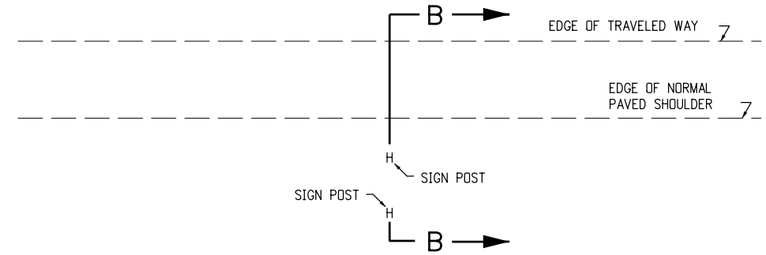

NORMAL CLEARANCE PLAN

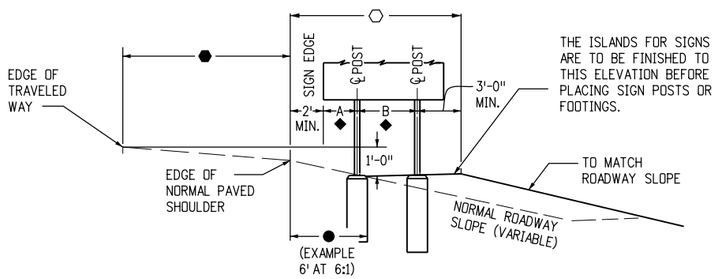

TYPICAL FILL SECTION A-A

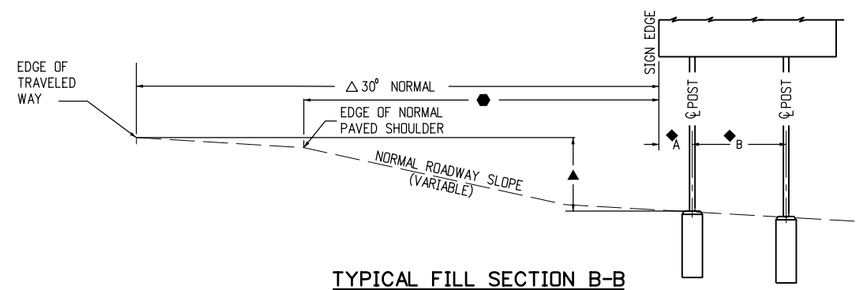

TYPICAL FILL SECTION B-B

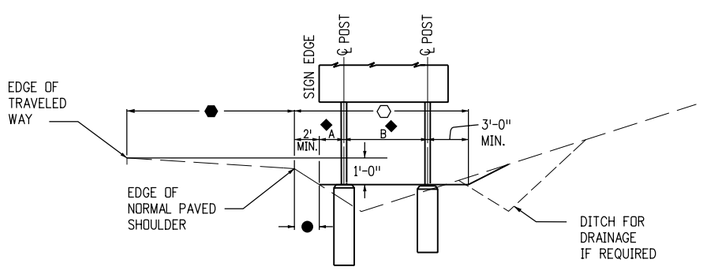

TYPICAL CUT SECTION A-A

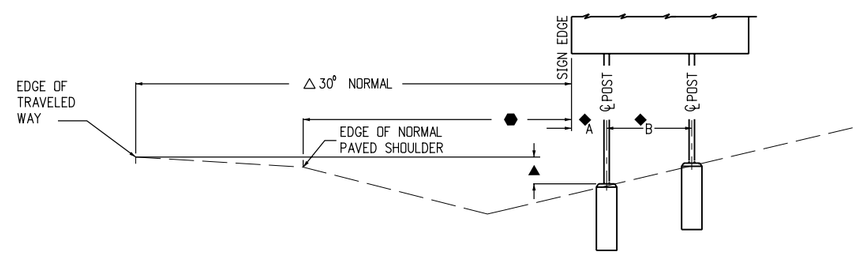

TYPICAL CUT SECTION B-B

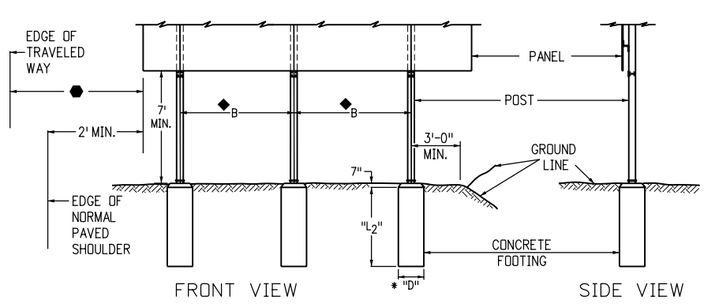

TYPICAL SIGN ISLAND ELEVATIONS

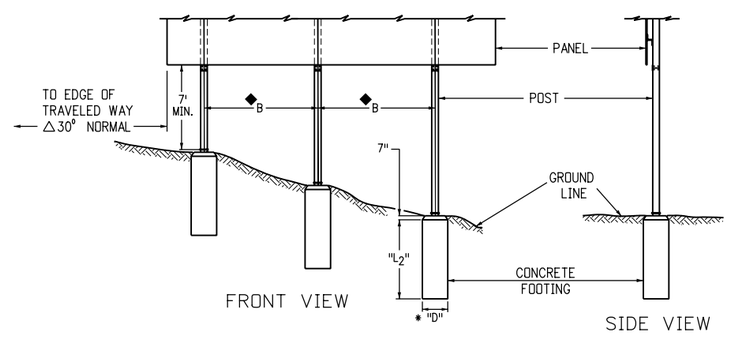

TYPICAL ELEVATIONS

DETAILS OF SIGN PLACEMENT

GENERAL NOTES

1. ALL CONCRETE IS TO BE CLASS "BZ". GROUT SHALL CONFORM TO "JOINT MORTAR".
2. USE AASHTO M270 (ASTM A709) GRADE 36 STEEL FOR BASE PLATES AND BOLT PLATES. USE ASTM-A307 STEEL FOR ANCHOR BOLTS.
3. USE GRADE 60 FOR REINFORCING STEEL VERTICAL BARS, HORIZONTAL HOOPS, AND ANCHOR BOLT STIRRUPS.
4. FOR ALL STEEL WORK ABOVE THE BASE PLATE, AND FOR ANGULAR PLACEMENT OF SIGNS, SEE APPLICABLE STANDARDS INCLUDED IN THE PLANS.
5. FOR ADDITIONAL INFORMATION, REFER TO "TABULATION OF SIGNS" AND "CROSS SECTIONS FOR CLASS III SIGNS" INCLUDED IN THE PLANS.
6. ◆ FOR "A" AND "B" DIMENSIONS. SEE COLORADO STANDARD PLAN S-614-4.
7. ● THE SIGN ISLAND SIDE SLOPE PARALLEL TO THE ROADWAY SHALL BE 6:1 OR FLATTER. sEE TYPICAL SECTIONS.
8. ⬡ THE SIGN ISLAND SIDE SLOPE PARALLEL TO THE ROADWAY SHALL BE 6:1 OR FLATTER. sEE TYPICAL SECTIONS.
9. ⬢ VARIABLE DIMENSIONS. SEE CROSS SECTIONS.
10. ▲ VARIABLE FOOTING ELEVATIONS. SEE CROSS SECTIONS FOR PLACEMENT.
11. △ THE LATERAL PLACEMENT MAY BE REDUCED TO A MINIMUM OF 2 FT. FROM THE EDGE OF NORMAL PAVED SHOULDER TO FIT FIELD CONDITIONS WHEN 30 FT. FROM THE EDGE OF THE TRAVELED WAY IS NOT FEASIBLE. SEE THE CROSS SECTIONS AND/OR TYPICAL GROUND SIGN PLACEMENT STANDARD.
12. EMBANKMENT FOR SIGN ISLANDS IS TO BE COMPACTED AS REQUIRED UNDER ITEM 203 OF THE STANDARD SPECIFICATIONS.
13. FOR ANGULAR PLACEMENT OF SIGNS, SEE COLORADO STANDARD PLAN S-614-1.
14. THE 4-INCH "BASE POST" AND LOWER "BREAK-AWAY PLATE" SHALL BE PAID FOR AS PART OF THE FOOTING.

Computer File Information			Sheet Revisions	
Creation Date: 07-04-06	Initials: KCM		Date:	Comments
Last Modification Date:	Initials:	R-X		
Full Path: www.dot.state.co.us/DesignSupport/				
Drawing File Name: MXXX0X0X0X				
CAD Ver.: MicroStation V8 Scale: Not to Scale Units: English				

Colorado Department of Transportation
4201 East Arkansas Avenue
Denver, Colorado 80222
Phone: (303) 757-9543
Fax: (303) 757-9219
Safety & Traffic Engineering Branch

KCM/JSW

CONCRETE FOOTINGS AND SIGN ISLANDS FOR CLASS III SIGNS

Issued By: Safety & Traffic Engineering Branch July 4, 2006

STANDARD PLAN NO.

S-614-6