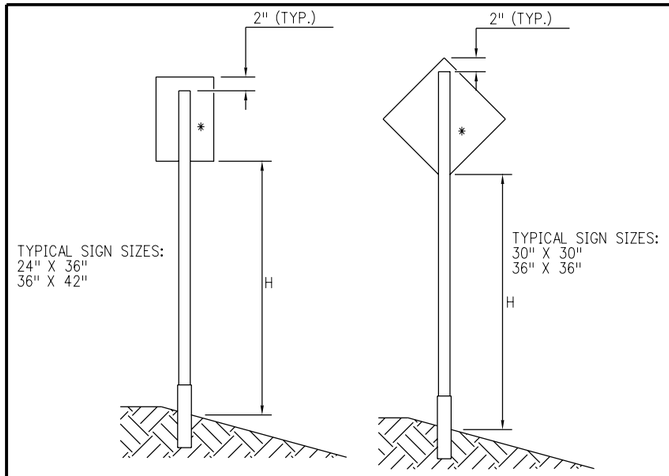

● **SIGN POST REQUIREMENTS**

POST TYPE	POST SIZE	MAX. CLEAR HEIGHT, H (FT.)	MAX. SIGN AREA (SF)
SQUARE TUBING	2.25" X 2.25" (12 GA.)	10	10.5
SQUARE TUBING	1.75" X 1.75" (12 GA.)	9	5
SQUARE TUBING	2.00" X 2.00" (12 GA.)	9	8
SQUARE TUBING	2.25" X 2.25" (12 GA.)	9	10.5
SQUARE TUBING	1.75" X 1.75" (12 GA.)	8	6
SQUARE TUBING	2.00" X 2.00" (12 GA.)	8	9
SQUARE TUBING	1.75" X 1.75" (12 GA.)	7	7
SQUARE TUBING	2.00" X 2.00" (12 GA.)	7	10

* SINGLE POST SHALL BE PLACE IN THE CENTER OF THE SIGN

SINGLE POST INSTALLATION

(TOTAL SIGN AREA NOT TO EXCEED 10.5 SF)

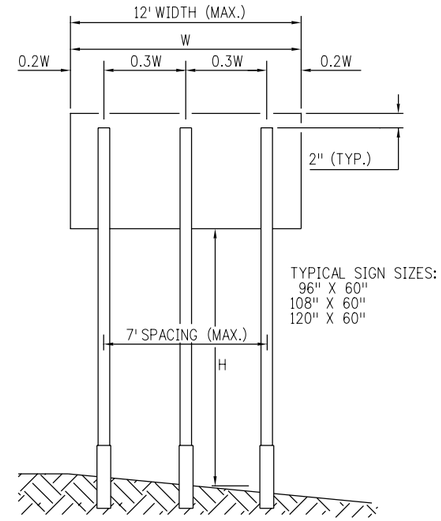

● **SIGN POST REQUIREMENTS**

POST TYPE	POST SIZE	MAX. CLEAR HEIGHT, H (FT.)	MAX. SIGN AREA (SF)
△ U-CHANNEL	3 LB./FT.	11	36
△ SQUARE TUBING	2.50" X 2.50" (10 GA.)	9	45
△ SQUARE TUBING	2.50" X 2.50" (10 GA.)	7	50
⬡ SQUARE TUBING	2.50" X 2.50" (10 GA.)	11	36
⬡ SQUARE TUBING	2.50" X 2.50" (10 GA.)	9	45

TRIPLE POST INSTALLATION

(TOTAL SIGN AREA NOT TO EXCEED 50 SF)

GENERAL NOTES

1. ALL SQUARE TUBING SIGN POST REQUIREMENTS ARE BASED ON A 10 OR 12-GAUGE THICKNESS, ASTM A570 GRADE 50 STEEL, A MINIMUM YIELD STRENGTH OF 60,000 PSI AND A 70 MPH WIND LOAD. ALL U-CHANNEL SIGN POSTS REQUIREMENTS ARE BASED ON A MINIMUM YIELD STRENGTH OF 80,000 PSI AND 85 MPH WIND LOAD.
2. STEEL POSTS, BASE POSTS, AND SLIP BASES FOR ALUMINUM PANEL SIGNS SHALL BE SELECTED FROM THE CDOT APPROVED PRODUCT LIST.
3. BASE POSTS SHALL NOT EXTEND MORE THAN 4" ABOVE GROUND LEVEL AND SHALL BE OF THE SAME WEIGHT/GAUGE AND TYPE AS THE SIGN POST.
4. INTERMIXING OF U-CHANNEL AND SQUARE TUBING POSTS, POSTS OF DIFFERENT WEIGHTS/GAUGES OR PRODUCT BRANDS IS PROHIBITED.
5. SUPPLEMENTAL SIGNS SHALL NOT BE ATTACHED DIRECTLY TO PRIMARY PANELS.
6. SPACING BETWEEN SUPPLEMENTAL PANELS AND PRIMARY PANELS SHALL NOT EXCEED 6".
7. SIGN PANELS PLACED PARALLEL TO TRAFFIC SHALL BE MOUNTED ON A MULTI-DIRECTIONAL BREAKAWAY SYSTEM. (SEE STANDARD PLAN S-630-4, SHEET 2)
8. AN APPROVED SLIP BASE IS REQUIRED WITH THE DOUBLE POST AND TRIPLE POST INSTALLATION. (SEE STANDARD PLAN S-630-4, SHEET 2).
9. SEE MANUFACTURER'S DRAWINGS FOR SPECIFIC ASSEMBLY INFORMATION (POST-TO-BASE POST OVERLAP), INCLUDING TYPES OF NUTS, BOLTS, WASHERS, AND OTHER PARTS REQUIRED FOR PRODUCT USE.
10. LAP-SPLICE OR MULTI-DIRECTIONAL SLIP BASE MAY BE USED. SEE STANDARD PLAN S-630-4, SHEET 2.

LEGEND

● SEE GENERAL NOTE 1.
▲ SEE GENERAL NOTE 4.
△ SEE GENERAL NOTE 8.
⬢ SEE GENERAL NOTE 9.
⬡ SEE GENERAL NOTE 10.

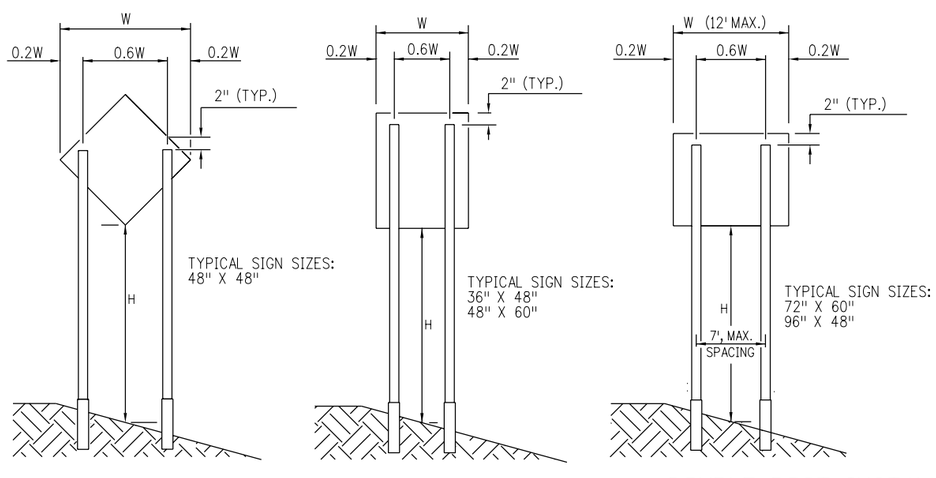

● **SIGN POST REQUIREMENTS**

POST TYPE	POST SIZE	MAX. CLEAR HEIGHT, H (FT.)	MAX. SIGN AREA (SF)
SQUARE TUBING	2.25" X 2.25" (12 GA.)	11	13
SQUARE TUBING	2.25" X 2.25" (12 GA.)	9	15
SQUARE TUBING	2.25" X 2.25" (12 GA.)	8	16
SQUARE TUBING	2.25" X 2.25" (12 GA.)	7	20
△ U-CHANNEL	3 LB./FT.	11	25
△ U-CHANNEL	3 LB./FT.	9	30
△ SQUARE TUBING	2.50" X 2.50" (10 GA.)	7	36

DOUBLE POST INSTALLATION

(TOTAL SIGN AREA NOT TO EXCEED 30 SF)

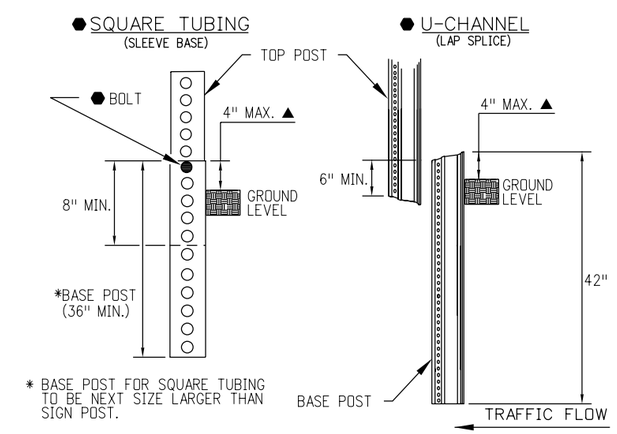

BASE POST INSTALLATION DETAILS

FOR SQUARE TUBING AND U-CHANNEL SYSTEMS

(SEE STANDARD PLAN S-630-4, SHEET 2 FOR MULTI-DIRECTIONAL SLIP BASE SYSTEMS)

Computer File Information	
Creation Date: 03/18/10	Initials: KEN
Last Modification Date:	Initials:
Full Path: www.dot.state.co.us/DesignSupport/	
Drawing File Name: S-630-4 (1of2).dgn	
CAD Ver.: MicroStation V8 Scale: Not to Scale Units: English	

R-X

Sheet Revisions	
Date:	Comments

Colorado Department of Transportation
4201 East Arkansas Avenue
Denver, Colorado 80222
Phone: (303) 757-9543
Fax: (303) 757-9219
Safety & Traffic Engineering Branch KCM/KEN

STEEL SIGN SUPPORT (TEMPORARY) INSTALLATION DETAILS

Issued By: Safety & Traffic Engineering Branch July 4, 2006

STANDARD PLAN NO.

S-630-4

Sheet No. 1 of 2

SQUARE TUBING SLIP BASE

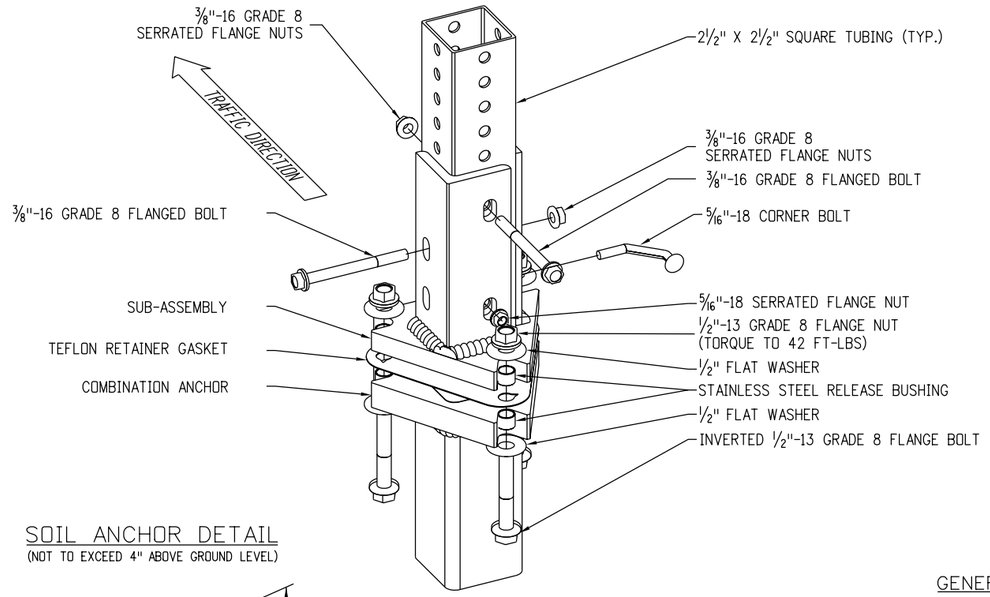

U-CHANNEL SLIP BASE

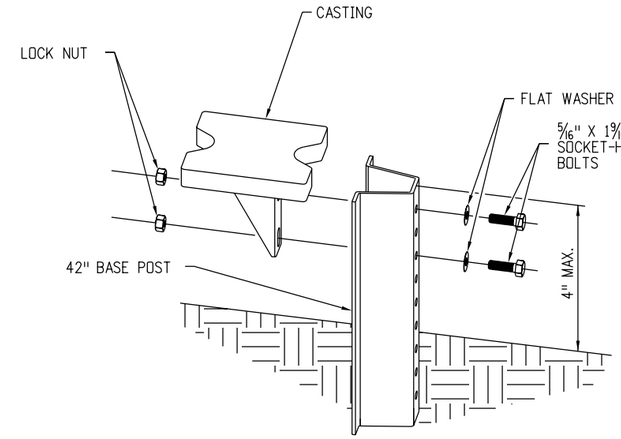

NOTE: BOLTS SHOULD BE TIGHTEN 1/2 TO 3/4 TURN AFTER SNUG.

STEP 1

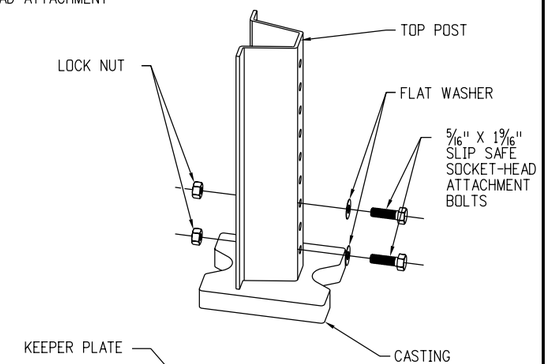

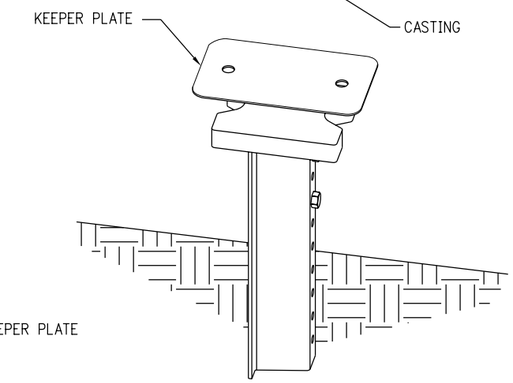

STEP 2

SOIL ANCHOR DETAIL

(NOT TO EXCEED 4" ABOVE GROUND LEVEL)

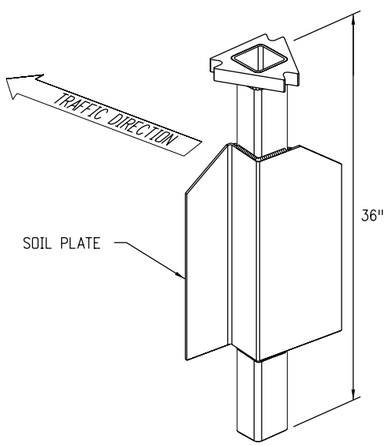

GENERAL NOTE:

THE CONTRACTOR SHALL INSTALL THE SOIL ANCHOR AND SLIP BASE PER THE MANUFACTURER'S RECOMMENDATIONS WITHOUT ADDITIONAL COMPENSATION.

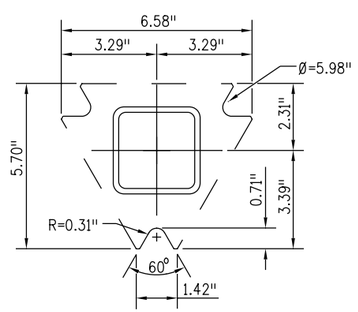

ANCHOR TOP VIEW

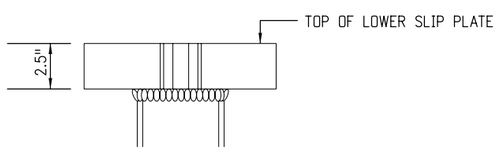

ANCHOR FRONT VIEW

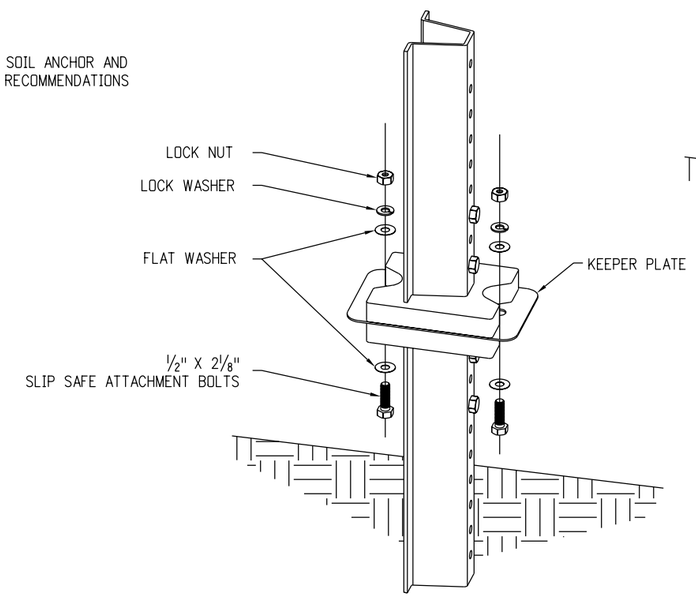

NOTE: TIGHTEN NUT 1/4 TO 1/2 TURN AFTER SNUG.

STEP 3

MULTI-DIRECTIONAL SLIP BASE POST DETAILS

Computer File Information		
Creation Date: 03/18/10	Initials: KEN	
Last Modification Date:	Initials:	R-X
Full Path: www.dot.state.co.us/DesignSupport/		
Drawing File Name: S-630-4 (2of2).dgn		
CAD Ver.: MicroStation V8 Scale: Not to Scale Units: English		

Sheet Revisions	
Date:	Comments

Colorado Department of Transportation
4201 East Arkansas Avenue
Denver, Colorado 80222
Phone: (303) 757-9083
Fax: (303) 757-9219
Safety & Traffic Engineering Branch KCM/KEN

STEEL SIGN SUPPORT (TEMPORARY) INSTALLATION DETAILS

Issued By: Safety & Traffic Engineering Branch July 4, 2006

STANDARD PLAN NO.

S-630-4

Sheet No. 2 of 2