BILL OF MATERIALS

ITEM #	DESCRIPTION	QTY/ POST	PART NO.
1	BRACKET, TYPE B650 6061-T6 ALUMINUM (SEE BRACKET SELECTION TABLE FOR BRACKET NO. 1 THROUGH NO. 3)	2	SBBK650-1A,-2A,-3A
2	BRACKET HARDWARE ASSEMBLY, TYPE B650, INCLUDES:	1	SB-B650LPH
2a	BOLT ⅝ IN. - 11UNC x 2¾ IN., HEX HEAD, ASTM A325, GALVANIZED ASTM A153	4	
2b	BOLT ⅝ IN. - 11UNC x 3 IN., HEX HEAD, ASTM A325, GALVANIZED ASTM A153	4	
2c	BOLT ⅝ IN. - 11UNC x 3¼ IN., HEX HEAD, ASTM A325, GALVANIZED ASTM A153	4	
2d	CAP SCREW ⅝ IN. - 13UNC x 1¼ IN., HEX HEAD, ASTM A307, GALVANIZED ASTM A153	4	
2e	LOCK WASHER ⅝ IN., ANSI B18-21-1, GALVANIZED ASTM A153	16	
2f	NUT ⅝ IN. - 11UNC, HEAVY HEX, ASTM A563 GR. DH, GALVANIZED ASTM A153	12	
3	COUPLING & SPECIAL BOLT ASSEMBLY, TYPE B, INCLUDES:	1	SB-CBLP
3a	SPECIAL BOLT 1 IN. - 8UNC, ASTM A449, GALVANIZED ASTM A153/B695	4	
3b	COUPLING 1 IN. - 8UNC, LP., AMS 6378D*, GALVANIZED ASTM A153, POLYESTER COAT**	4	
3c	SHIM 1 IN. HORSESHOE, 14 GAUGE, GALVANIZED STEEL SHEET	2	
3d	SHIM 1 IN. HORSESHOE, 18 GAUGE, GALVANIZED STEEL SHEET	2	
4	HINGE ASSEMBLY, TYPE B650, INCLUDES:	1	SB-HB2
4a	HINGE PLATE TYPE B650, AISI 4130 STEEL, GALVANIZED ASTM A123	4	
5	HINGE HARDWARE ASSEMBLY, TYPE B, INCLUDES:	1	SB-HHB
5a	BOLT ¾ IN. - 10UNC x 2¼ IN., HEX HEAD, ASTM A325, GALVANIZED ASTM A153	8	
5b	LOCK WASHER ¾ IN., ANSI B18-21-1, GALVANIZED ASTM A153	8	
5c	NUT ¾ IN. - 10UNC, HEAVY HEX, ASTM A563 GR. DH, GALVANIZED ASTM A153	8	
6	ANCHOR ASSEMBLY, TYPE B, INCLUDES:	1	SBABPK
6a	ANCHOR 1 IN. - 8UNC, 304 S.S. FERRULE, AISI 1045 ROD, AISI 1008 COIL	4	

* WITH EXCEPTION TO DECARBURIZATION AND MACROSTRUCTURE CLAUSES.
** 2-4 MIL. THICK MORTON POWDER COATINGS' 20-7037 POLYESTER POWDER COAT.

GENERAL NOTES:

1. BREAK-AWAY SUPPORT SYSTEM SHALL MEET ALL REQUIREMENTS OF "AASHTO STANDARD SPECIFICATIONS FOR STRUCTURAL SUPPORTS FOR HIGHWAY SIGNS, LUMINAIRES AND TRAFFIC SIGNALS".
2. ALL HARDWARE SHALL BE AMERICAN STANDARD SIZES AND SHALL BE HOT DIP GALVANIZED PER ASTM A153, OR MECHANICALLY GALVANIZED PER ASTM B695.
3. FASTENERS, EXCEPT FOR SPECIAL BOLT AND COUPLING, SHALL BE INSTALLED WITH LOCK WASHERS OR LOCKNUTS, AND DO NOT HAVE SPECIFIC TORQUE REQUIREMENTS. FASTENERS SHOULD BE MADE AS TIGHT AS POSSIBLE WITH CONVENTIONAL WRENCHES, UNLESS OTHERWISE NOTED.
4. SQUARE AND LEVEL INDIVIDUAL COMPONENTS TO MINIMIZE NEED FOR SHIMMING.
5. STRUCTURAL STEEL TO BE HOT DIP GALVANIZED PER ASTM A123 AFTER FABRICATION..
6. NO MORE THAN TWO SHIMS SHALL BE PLACED BENEATH ANY ONE COUPLING AND NO MORE THAN THREE SHIMS BENEATH ANY PAIR OF COUPLINGS.
7. SELECT PROPER POST SIZE BY REFERRING TO POST SELECTION TABLES FOR MEDIUM AND LARGE SIGNS.
8. SEE BELOW FOR COMPLETE INSTALLATION INSTRUCTIONS.

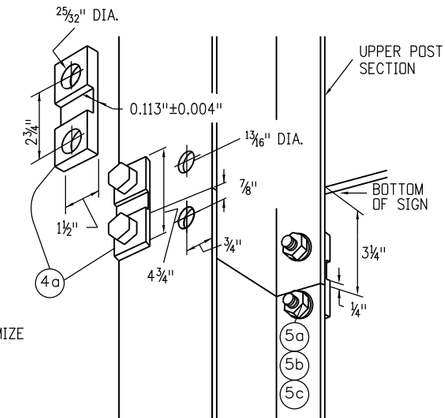

SELECT CORRECT BRACKET NUMBER FROM BRACKET SELECTION TABLE USING THE "L" VALUE, AS SHOWN IN THE ADJACENT FIGURE

$L = L_T - H/2$

ALL POSTS ON A SIGN STRUCTURE SHALL USE THE SAME BRACKET NUMBER, DETERMINED BY THE LENGTH OF THE LONGEST POST.

BRACKET SELECTION TABLE

POST WIDTH	BRACKET #1		BRACKET #2		BRACKET #3	
	MIN. 'L'	MAX. 'L'	MIN. 'L'	MAX. 'L'	MIN. 'L'	MAX. 'L'
10 IN.	16 FT.	29 FT.	11 FT.	16 FT.	-	11 FT.
12 IN.	18 FT.	29 FT.	13 FT.	18 FT.	-	13 FT.
14 IN.	19 FT.	29 FT.	14 FT.	19 FT.	-	14 FT.
16 IN.	21 FT.	29 FT.	16 FT.	21 FT.	-	15 FT.
18 IN.	23 FT.	29 FT.	16 FT.	23 FT.	-	16 FT.
21 IN.	25 FT.	29 FT.	18 FT.	26 FT.	-	18 FT.

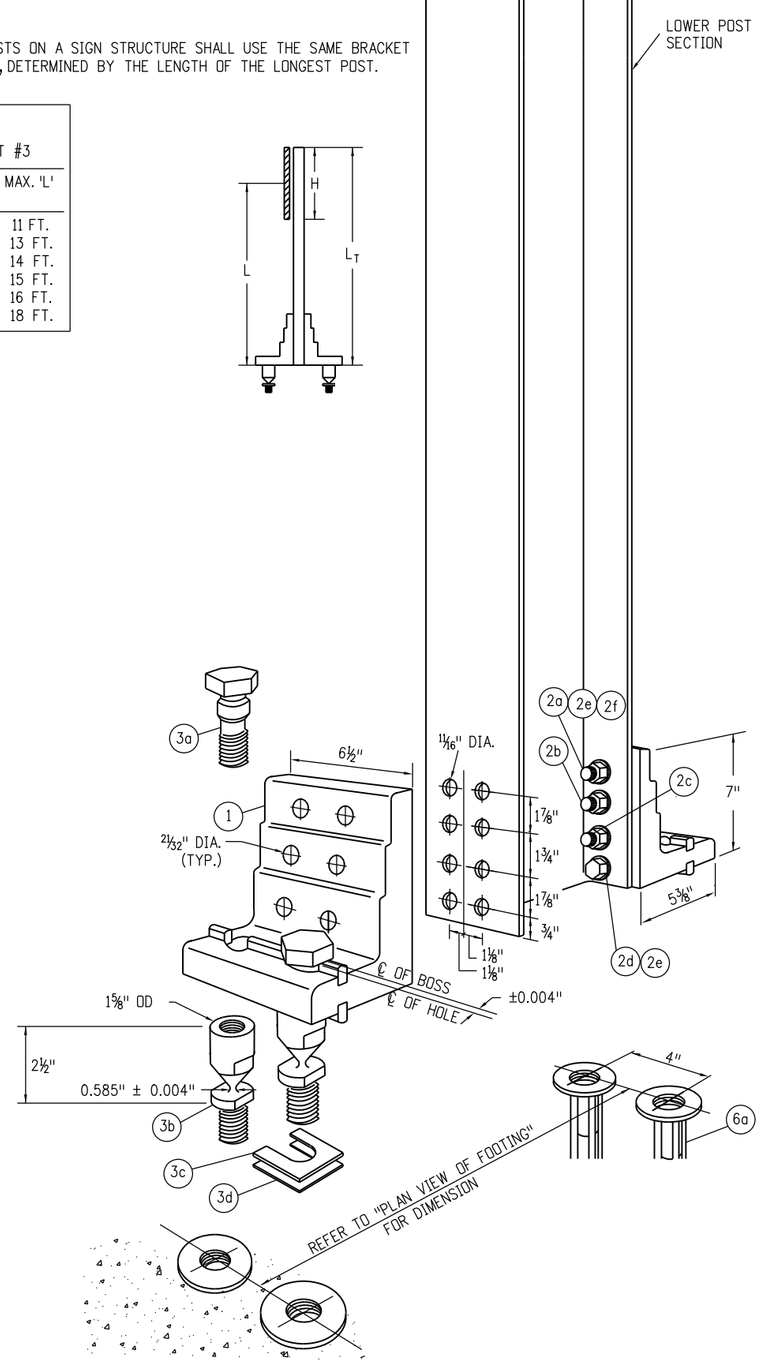

INSTALLATION NOTES

WRENCH SIZES REQUIRED: 9/16 IN., ⅞ IN., 1 1/16 IN., 1¼ IN., 1 7/16 IN., 1⅝ IN.

BRACKET ASSEMBLY:

* ASSEMBLE BRACKET TO POST WITH BOLTS PROVIDED.
* SQUARE AND TIGHTEN ITEMS 1, 2a, 2b, 2c, 2d, 2e & 2f

ANCHOR ASSEMBLY:

* ASSEMBLE COUPLING ANCHORS (ITEM 6a) TO INSTALLATION TEMPLATE (NOT SHOWN). RIGID STEEL TEMPLATE IS RECOMMENDED.

* LOWER ENTIRE ANCHOR ASSEMBLY INTO FRESH CONCRETE, AND VIBRATE INTO POSITION SO THAT THE TOPS OF THE INDIVIDUAL ANCHORS (ITEM 6a) ARE FLUSH WITH THE FINISHED TOP SURFACE OF THE FOOTING.

COUPLING ASSEMBLY:

* SUSPEND POST OVER FOOTING, AND INSERT SPECIAL BOLTS (ITEM 3a) THROUGH BRACKET (ITEM 1).

* BELOW BRACKET, THREAD COUPLINGS (ITEM 3b) INTO ANCHORS (ITEM 6a), BUT LEAVE LOOSE.

* LOWER POST WITH SPECIAL BOLTS (ITEM 3a) ONTO LOOSE COUPLINGS (ITEM 3b), AND THREAD BOLTS INTO COUPLINGS.

* THREAD COUPLINGS ALL THE WAY INTO ANCHORS (ITEM 6a).

* TIGHTEN SPECIAL BOLTS 3a).

NOTE! DO NOT PLACE TORQUE ACROSS NECKED DOWN PORTION OF COUPLING -- WRENCH FLATS ARE PROVIDED ON EITHER SIDE FOR PROPER TIGHTENING.

* IF POST IS NOT PLUMB, INSERT SHIMS (ITEMS 3c AND 3d) BETWEEN COUPLINGS (ITEM 3b), AND ANCHOR (ITEM 6a).

HINGE ASSEMBLY:

* BUTT UPPER AND LOWER POSTS TOGETHER ON FLAT SURFACE.

* PLACE HINGE PLATES (ITEM 4a) ON OUTER FLANGES, AND SECURE WITH BOLTS (ITEMS 5a, 5b, AND 5c) - SNUG BUT DO NOT TIGHTEN.

* MAKE SURE UPPER AND LOWER POSTS ARE IN ALIGNMENT; THEN TIGHTEN ALL NUTS (ITEM 5c) TO PROOF LOAD -- ½ TURN BEYOND SNUG.

Computer File Information
Creation Date: 10/06/06 Initials: KCM
Last Modification Date: 02/15/11 Initials: KEN
Full Path: www.dot.state.co.us/DesignSupport/
Drawing File Name: Sheet_DS-614-5_3of3.dgn
CAD Ver.: MicroStation V8 Scale: Not to Scale Units: English

Sheet Revisions

	Date:	Comments
REV	02/15/11	CALLOUTS AND DIMENSIONS CORRECTED
REV		
REV		
REV		

Colorado Department of Transportation
4201 East Arkansas Avenue
Denver, Colorado 80222
Phone: (303) 757-9543
Fax: (303) 757-9820
Project Development Branch
KCM/KEN

MULTI-DIRECTIONAL BREAK-AWAY DETAIL
FOR 10-INCH, 12-INCH, 14-INCH, 16-INCH, 18-INCH AND 21-INCH WF SIGN POST

Issued By: Traffic Engineering Unit October 28, 2002

PROJECT DETAIL NO.
DS-614-5

Sheet No. 3 of 3