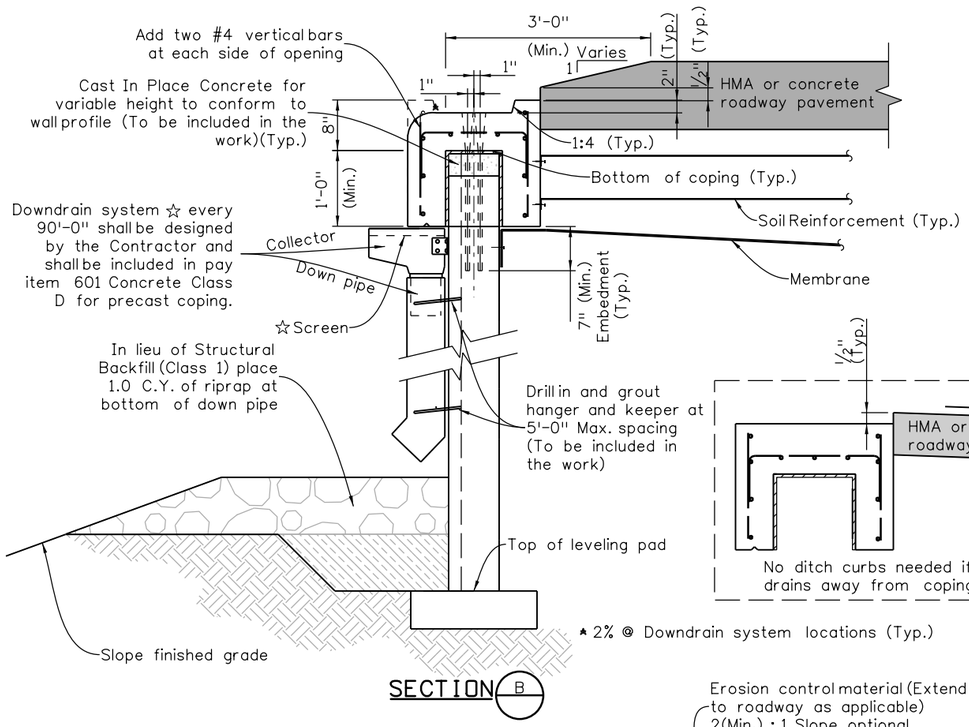

SECTION B

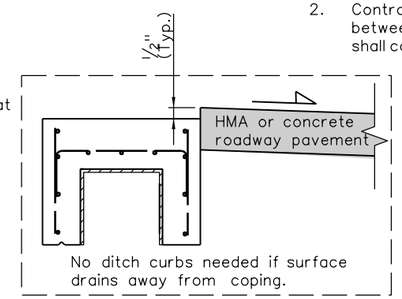

PRECAST COPING QUANTITIES FOR INFORMATION ONLY

ITEM NO.	DESCRIPTION (Based on block + banner depth of 8", D=1'-1")	UNIT	QUANTITY
601	CONCRETE CLASS D	C.Y./LF	0.074
602	REINFORCING STEEL (EOPXY COATED)	LB./LF	11.4

NOTES:

1. Shop drawings including collector and down pipe are required for Engineer's approval.
2. Contractor may provide alternative connection between precast segments, however coping dimensions shall conform to plan and all hardware is galvanized.

☆: Material or coating will be corrosion resistant (e.g. galvanized). Contractor may submit alternate design of collector and down pipe for Engineers approval.

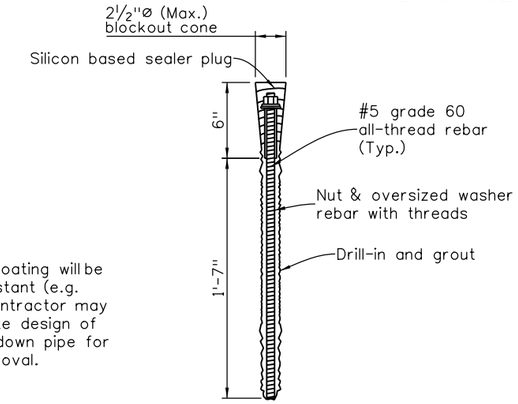

CONE BLOCKOUT DETAL

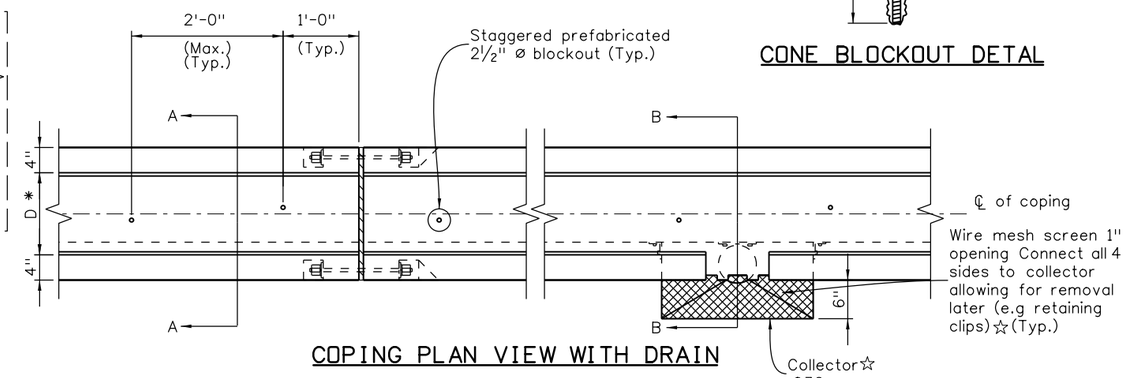

COPING PLAN VIEW WITH DRAIN

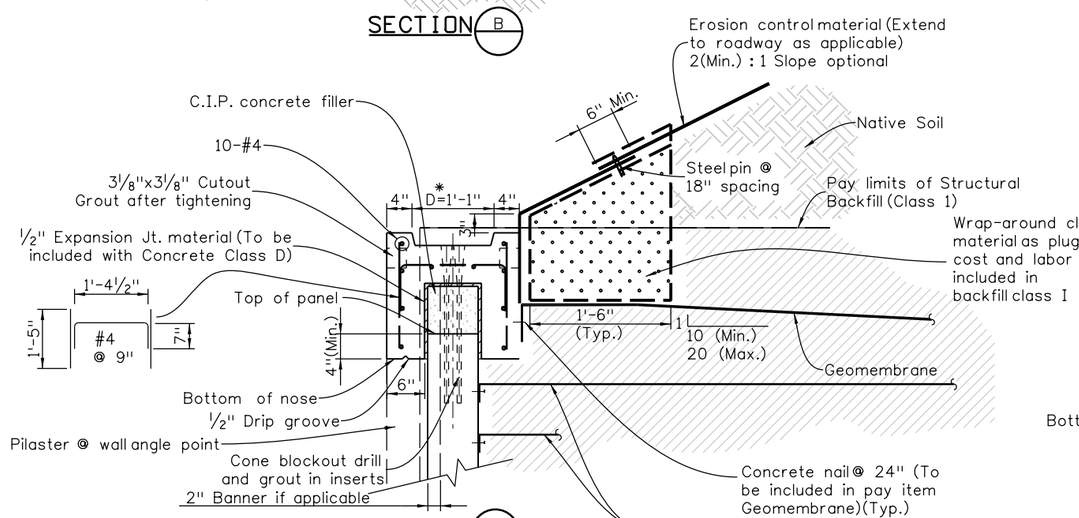

SECTION A

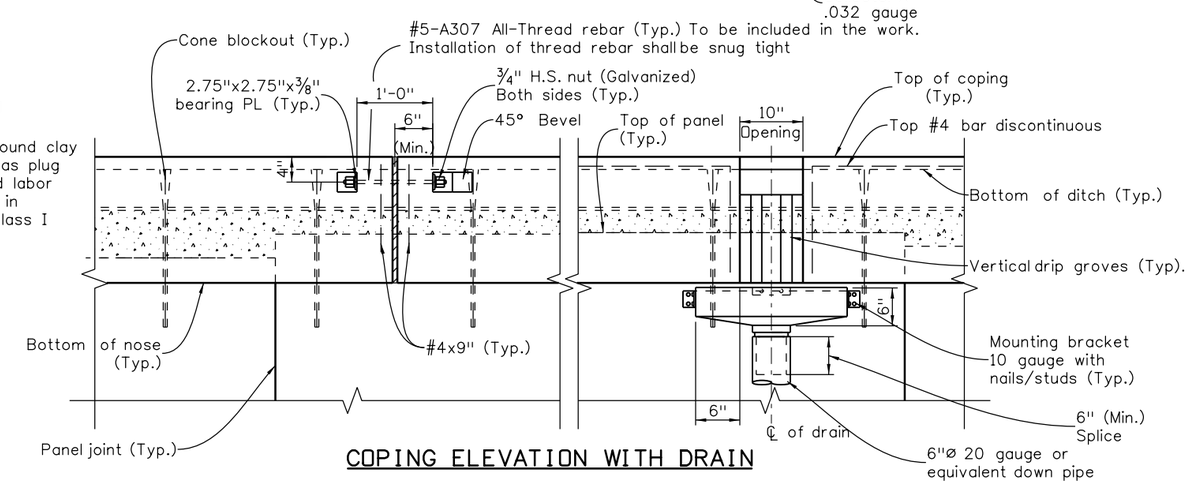

COPING ELEVATION WITH DRAIN

* Contractor shall verify panel and banner dimensions prior to submitting shop drawings and fabrication. D dimension shall be based on the actual panel thickness.

Quantities	INITIAL	DATE
Quantities By		
Checked By		

Detail	INITIAL	DATE
Detailed By		
Checked By		

Design	INITIAL	DATE
Designed By		
Checked By		

Revision Dates	(Preliminary Stage Only)
09-16	

Print Date: $DATE$	
File Name: Sheet_B-504-U2.dgn	
Horiz. Scale: As Noted	Vert. Scale: As Noted
Staff Bridge Branch-Unit 0XXX	Unit Leader Initials

Sheet Revisions

Date:	Comments	Init.

Colorado Department of Transportation
4201 East Arkansas Avenue
Room 107
Denver, CO 80222
Phone: 303-757-9309 FAX: 303-757-9197
Staff Bridge Branch

Initials

As Constructed
No Revisions:
Revised:
Void:

PRECAST COPING, ROADWAY PAVEMENT OR CLAY PLUG DETAILS FOR PANEL FACING

Designer:	XXXXXXX	Structure Numbers	Wall-X-XX-XX
Detailer:	XXXXXXX		Wall-X-XX-XX
Sheet Subset:	Wall	Subset Sheets: WXX of XXX	

Project No./Code
Project Number
Code
Sheet Number

$PLOT_INFO$