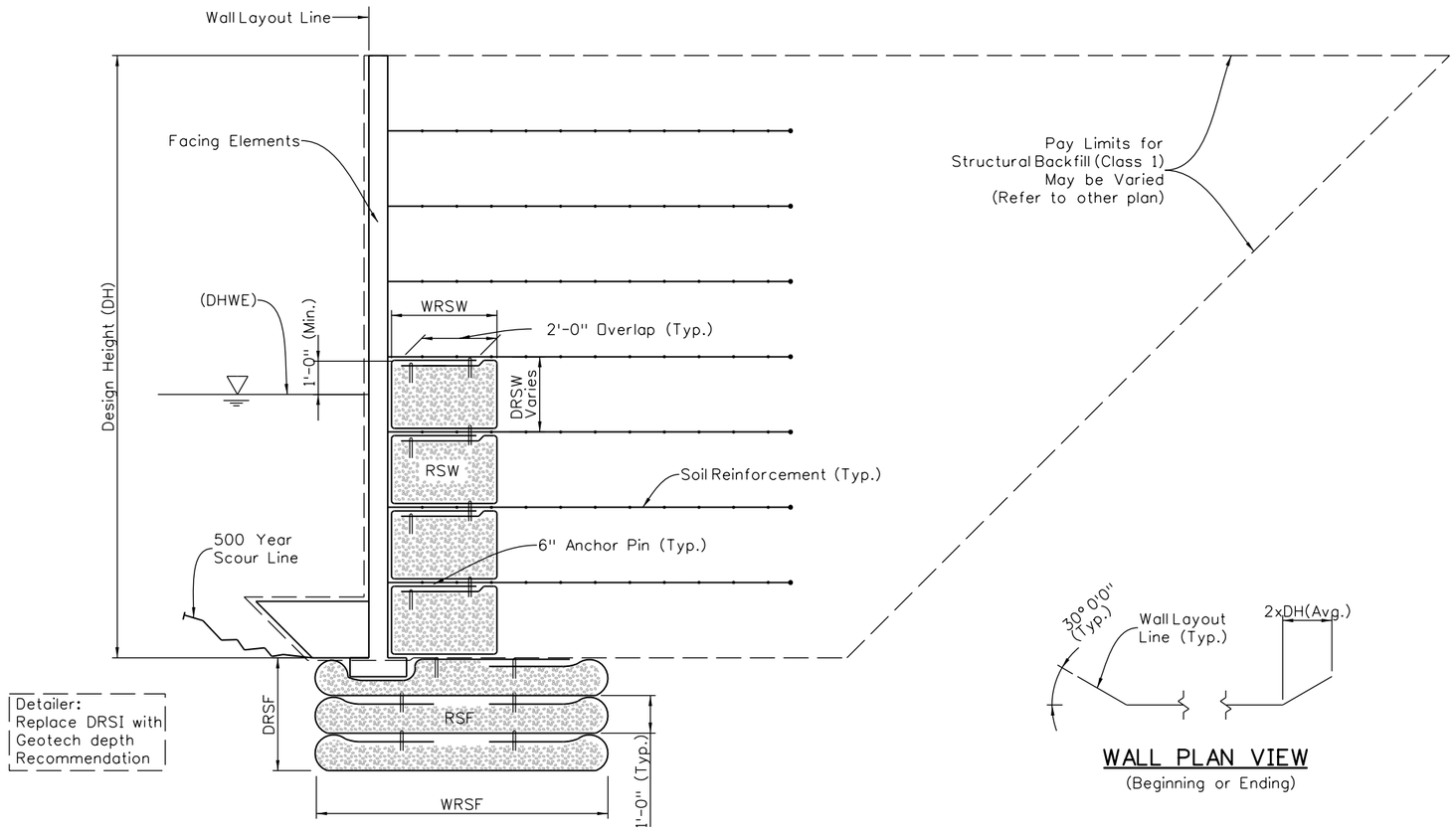

SECTION VIEW AA

WALL PLAN VIEW
(Beginning or Ending)

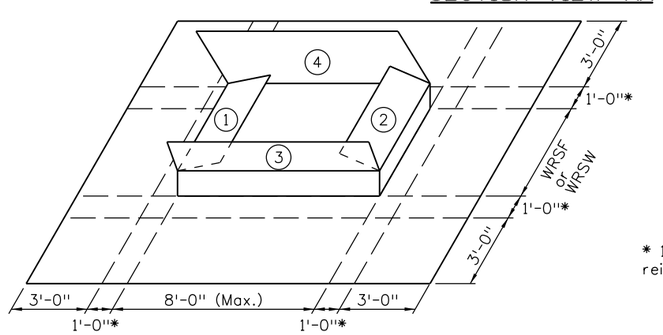

RSF OR RSW (FOLDING ALL FOUR SIDES/NO CUTTING)

* 1'-0" as shown for RSF shall be reinforcement spacing for RSW

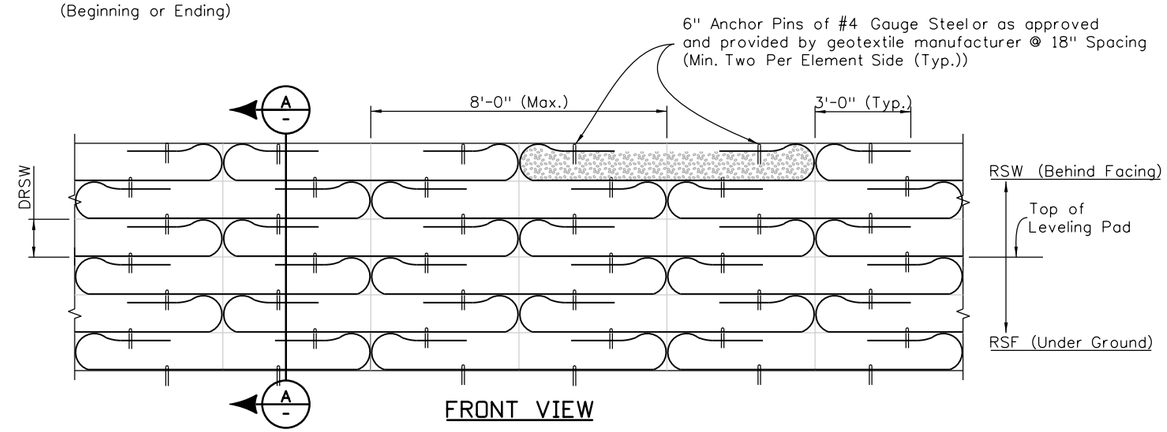

FRONT VIEW

NOTES:

1. RSF is for bridging over weak or deficient foundation as over excavation and soil replacement identified in geotechnical report or during construction. Item includes excavation, backfill and geotextile.
2. RSW is for avoiding wave actions or pumping out of soil fines along encroaching waterfront. Item includes geotextile, however backfill is included in Structural Backfill (Class 1).
3. Both RSF and RSW shall have full encapsulations by geotextile with anchor pins.
4. Geotextile reinforcement shall be woven fabric with a minimum average roll value of 4800 lb/ft based on ASTM D4595.
5. Geotextile reinforcement shall be placed by alternating Machine Direction (MD) with Cross Machine Direction (XD) from layer to layer. The geotextile reinforcement wrap at the back face of facing shall be pulled back slack free with its end anchored to soil underneath with staples or pins.
6. RSF shall be filled with compacted structural backfill (Class 1).
7. RSW shall be filled either with compacted structural backfill (Class 1), Sand, or filter material (Class B) as recommended by the hydraulic engineer.
8. Where RSW and RSF are used, application shall include both ends of wall with 30° bend-in RSW and RSF segments along its length as specified in the plans. These bend-in segments applied to bridge abutment wall shall be a minimum of 2x the wall average design heigh (DH).

Revision Dates	(Preliminary Stage Only)
09-16	

Quantities			
		INITIAL	DATE
Quantities By			
Checked By			

Detail			
		INITIAL	DATE
Detailed By			
Checked By			

Design			
		INITIAL	DATE
Designed By			
Checked By			

nguyenh 9:18:44 AM C:\Users\nguyenh\Desktop\Worksheet dgn and PDF\Sheet_B-504-R1.dgn

Print Date: 9/6/2016	
File Name: Sheet_B-504-R1.dgn	
Horiz. Scale: As Noted	Vert. Scale: As Noted
Staff Bridge Branch-Unit 0XXX	Unit Leader Initials

Sheet Revisions		
Date:	Comments	Init.

Colorado Department of Transportation
4201 East Arkansas Avenue
Room 107
Denver, CO 80222
Phone: 303-757-9309 FAX: 303-757-9197
Staff Bridge Branch

Initials

As Constructed
No Revisions:
Revised:
Void:

RSF FOR WEAK FOUNDATION AND/OR RSW FOR WATERFRONT

Designer:	XXXXXXX	Structure Numbers	Wall-X-XX-XX
Detailer:	XXXXXXX		Wall-X-XX-XX
Sheet Subset:	Wall	Subset Sheets: WXX of XXX	

Project No./Code
Project Number
Code
Sheet Number