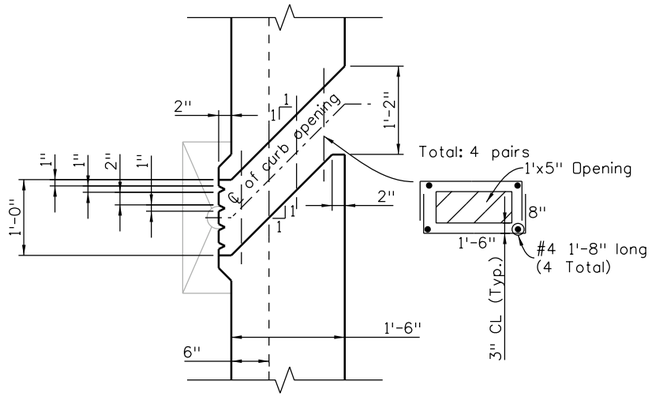

SECTION B-B

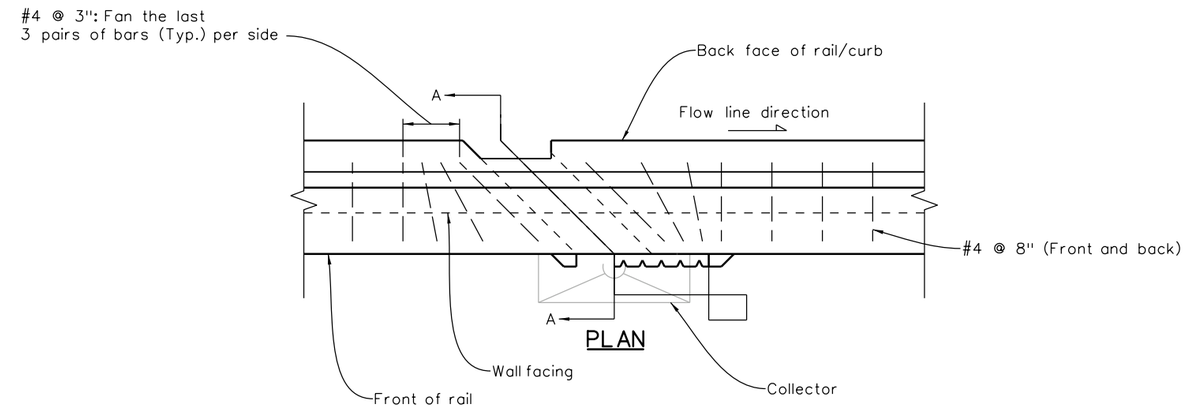

PLAN

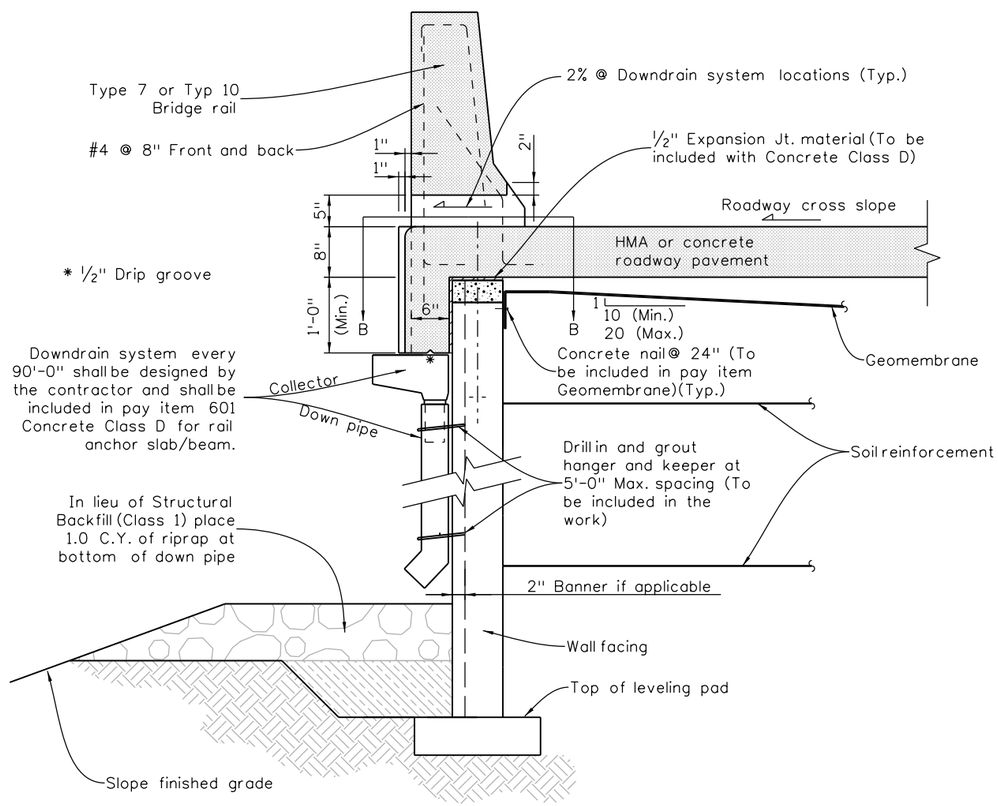

SECTION A-A

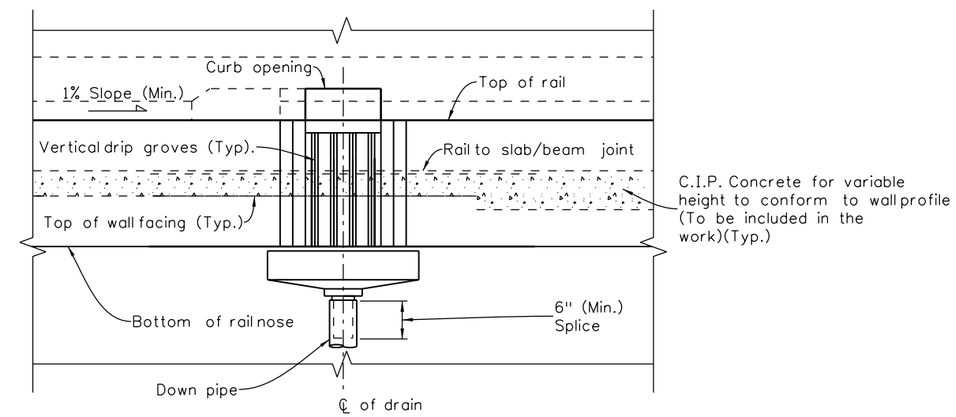

RAIL/WALL ELEVATION WITH DRAIN

NOTES:

1. Working drawings for curb drain including collector and down pipe are required for engineer's information prior to fabrication.
2. Added bars and concrete at drain openings are included in pay item 606 Bridge Rail
3. Similar curb detail for Type 10 bridge rail.

Revision Dates (Preliminary Stage Only)
09-16

Quantities			
	INITIAL	DATE	
Quantities By			
Checked By			

Detail			
	INITIAL	DATE	
Detailed By			
Checked By			

Design			
	INITIAL	DATE	
Designed By			
Checked By			

nguyenh 9:18:57 AM C:\Users\nguyenh\Desktop\Worksheet dgn and PDF\Sheet_B-504-V3.dgn

Print Date: 9/6/2016
File Name: Sheet_B-504-V3.dgn
Horiz. Scale: As Noted Vert. Scale: As Noted
Staff Bridge Branch-Unit 0XXX Unit Leader Initials

Sheet Revisions		
Date:	Comments	Init.

Colorado Department of Transportation
4201 East Arkansas Avenue
Room 107
Denver, CO 80222
Phone: 303-757-9309 FAX: 303-757-9197
Staff Bridge Branch Initials

As Constructed
No Revisions:
Revised:
Void:

RAIL ANCHOR SLAB/BEAM
RAIL/CURB DRAIN DETAILS

Designer:	XXXXXXX	Structure Numbers	Wall-X-XX-XX
Detailer:	XXXXXXX		Wall-X-XX-XX
Sheet Subset:	Wall	Subset Sheets: WXX of XXX	

Project No./Code
Project Number
Code
Sheet Number