B-607-1

(Do not use with B-607-3 or B-607-5)

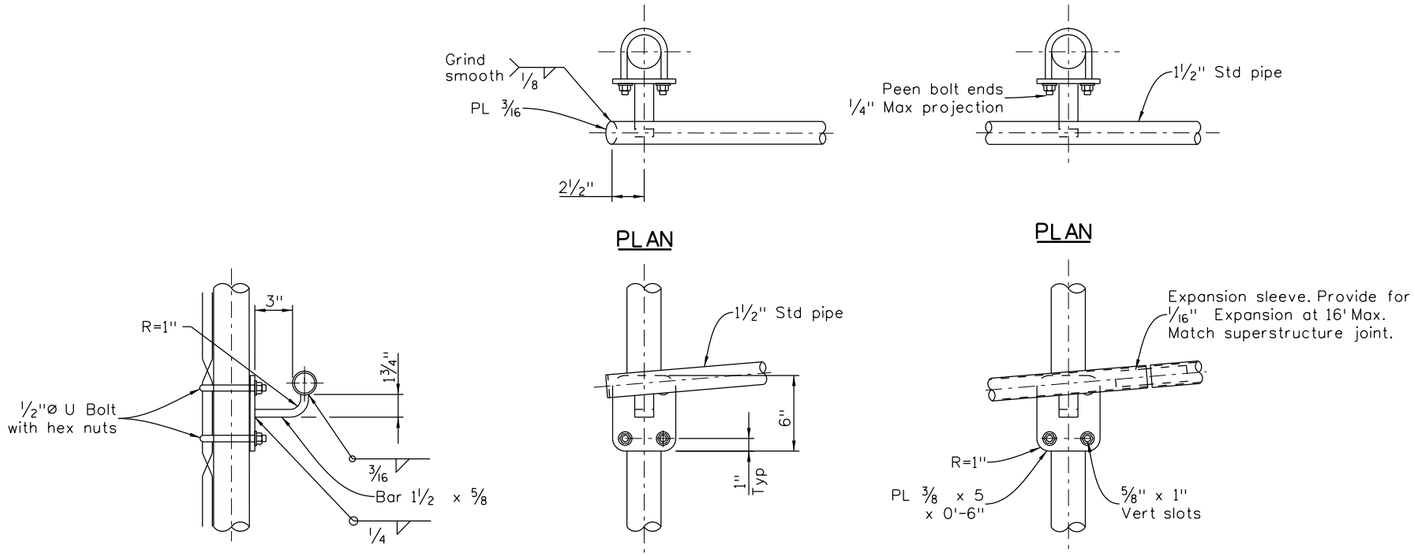

HANDRAIL/BICYCLE RUB RAIL DETAILS

At vertical post

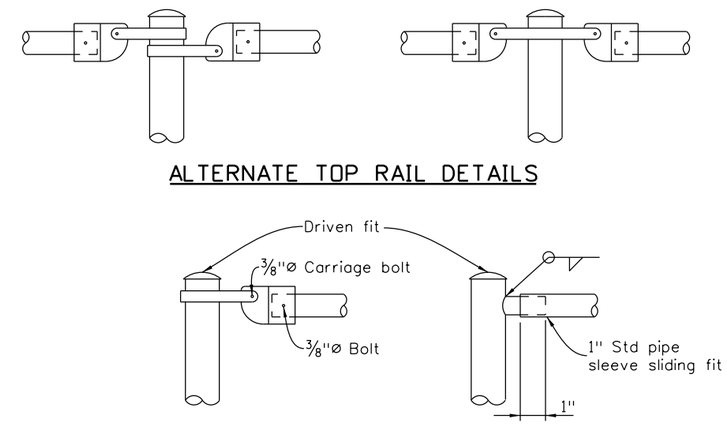

TOP RAIL CONNECTION DETAILS

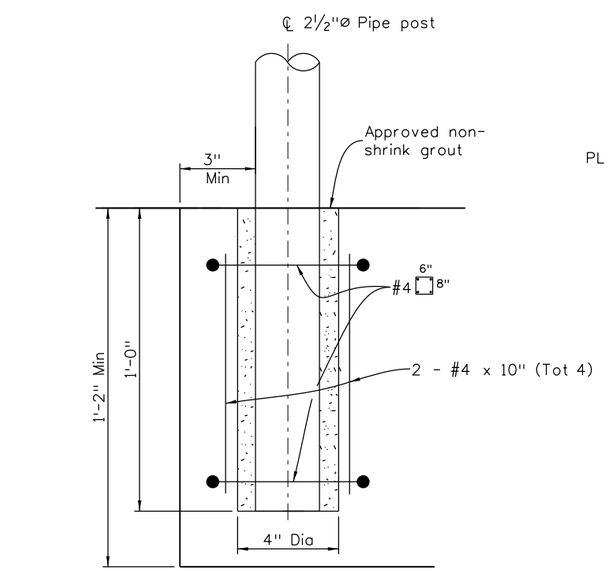

ANCHORAGE DETAIL

May be used when depth of concrete is 1'-2" or more.

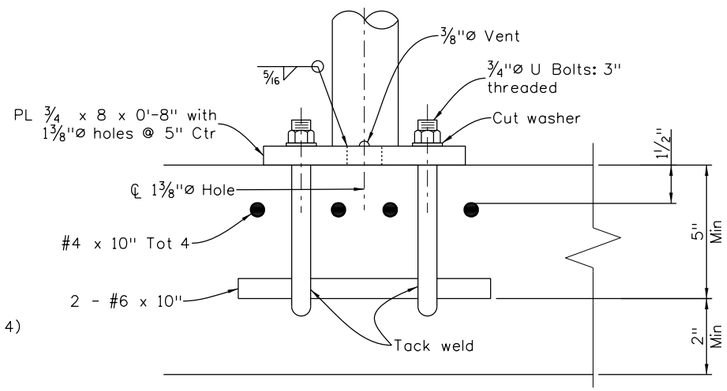

ALTERNATE ANCHORAGE DETAIL

May be used when depth of concrete is 7" or more.

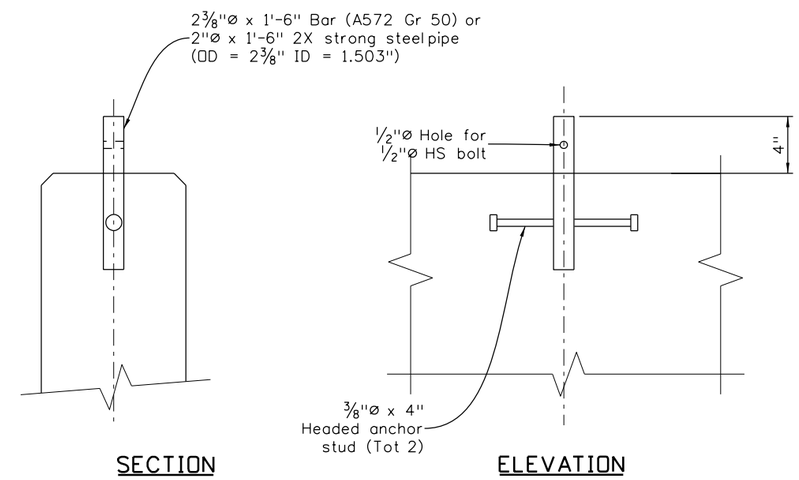

ANCHORAGE DETAIL

Revision Dates	3/99	11/99	4/02	9/02	3/07	10/13	3/23	9/ 24

INITIALS	DESIGN	DATE	DETAIL	DATE	QUANTITY	DATE
By						
Checked By						

All seals for this set of drawings are applied to the cover page(s)

Print Date: $DATE$
File Name: Sheet_B-607-1.dgn
Horiz. Scale: None Vert. Scale: As Noted
Unit Information Unit Leader Initials

Sheet Revisions		
Date:	Comments	Init.

Colorado Department of Transportation
2829 West Howard Place, 3rd Floor
Denver, CO 80204
Phone: 303-512-4079
FAX: 303-757-9197
Staff Bridge Branch Initials

As Constructed
No Revisions:
Revised:
Void:

FENCE CHAIN LINK SPECIAL DETAILS

Designer:	XXXXXXXX	Structure Numbers	X-XX-XX
Detailer:	XXXXXXXX		X-XX-XX
Sheet Subset:	BRIDGE	Subset Sheets:	BXX of XXX

Project No./Code
Project Number
Code
Sheet Number

$PLOT_INFO$