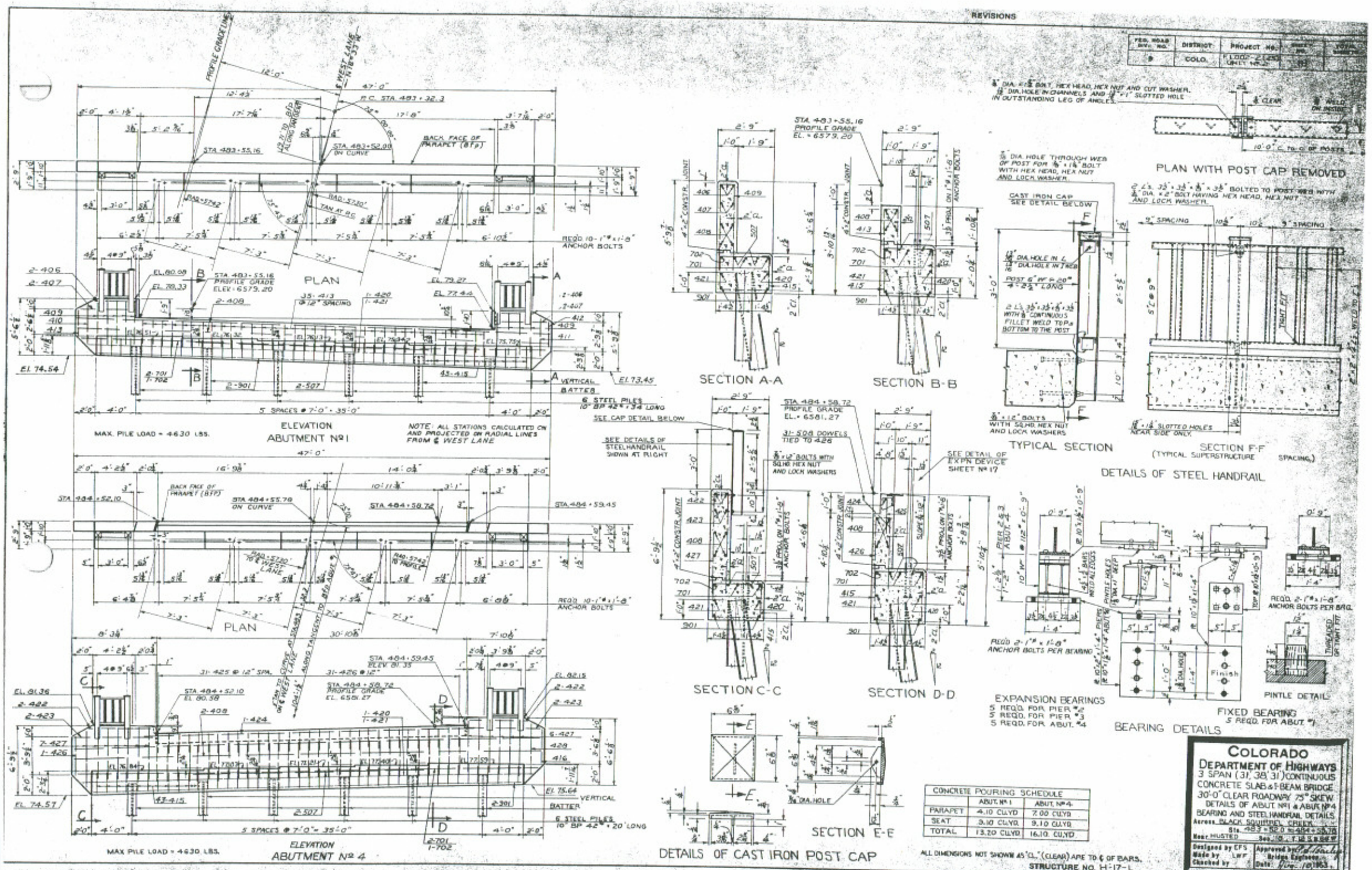
REVISIONS
FED. ROAD DIV. NO. 9
DISTRICT COLO.
PROJECT NO. F 1002-2 (25) UNIT NO. 2
PLAN
ELEVATION
ABUTMENT Nº 1
MAX. PILE LOAD = 4630 LBS.
NOTE: ALL STATIONS CALCULATED ON AND PROJECTED ON RADIAL LINES FROM ℄ WEST LANE
PLAN
ELEVATION
ABUTMENT Nº 4
MAX PILE LOAD = 4630 LBS.
SECTION A-A
SECTION B-B
SECTION C-C
SECTION D-D
SECTION E-E
DETAILS OF CAST IRON POST CAP
PLAN WITH POST CAP REMOVED
TYPICAL SECTION
SECTION F-F
(TYPICAL SUPERSTRUCTURE SPACING)
DETAILS OF STEEL HANDRAIL
EXPANSION BEARINGS
5 REQ'D. FOR PIER #2
5 REQ'D. FOR PIER #3
5 REQ'D. FOR ABUT. #4
BEARING DETAILS
FIXED BEARING
5 REQ'D. FOR ABUT. #1
PINTLE DETAILS
CONCRETE POURING SCHEDULE
ABUT. Nº 1
ABUT. Nº 4
PARAPET 4.10 CU.YD 7.00 CU.YD
SEAT 9.10 CU.YD 9.10 CU.YD
TOTAL 13.20 CU.YD 16.10 CU.YD
ALL DIMENSIONS NOT SHOWN AS "CL." (CLEAR) ARE TO ℄ OF BARS.
STRUCTURE NO. H-17-L
COLORADO
DEPARTMENT OF HIGHWAYS
3 SPAN (31', 38', 31') CONTINUOUS
CONCRETE SLAB & I-BEAM BRIDGE
30'-0" CLEAR ROADWAY 75° SKEW
DETAILS OF ABUT. Nº 1 & ABUT. Nº 4
BEARING AND STEEL HANDRAIL DETAILS
Across BLACK SQUIRREL CREEK
Sta. 483+52.0 to 484+55.78
Near HUSTED
Designed by CFS
Made by LWF
Checked by
Approved by
Bridge Engineer
Date: Aug. 10, 1953

REVISIONS

FED. ROAD DIV. NO.	DISTRICT	PROJECT NO.	SHEET	TOTAL SHEETS
9	COLO.	H-087-2(19)Amd 2	25	

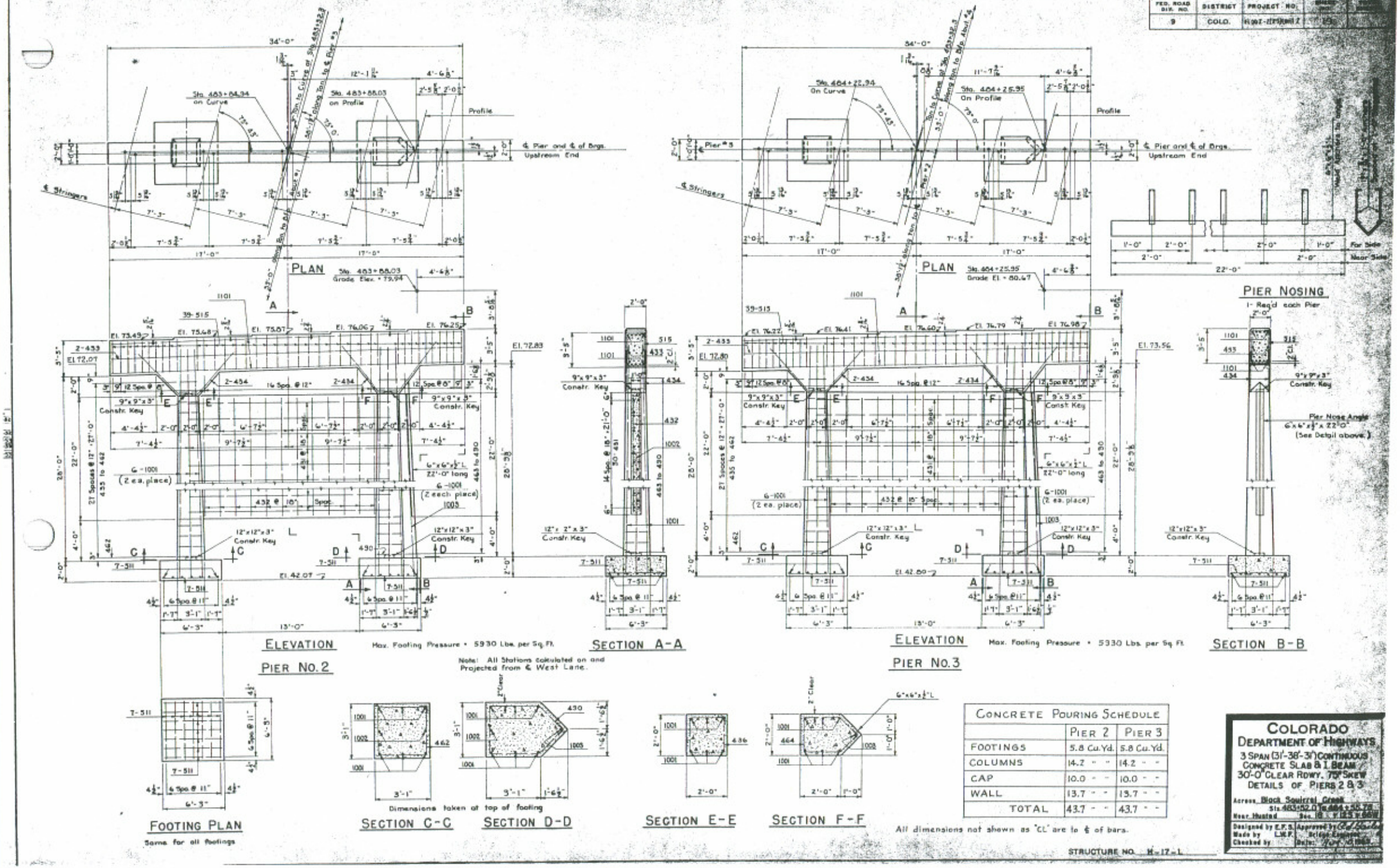

CONCRETE POURING SCHEDULE	PIER 2	PIER 3
FOOTINGS	5.8 Cu.Yd.	5.8 Cu.Yd.
COLUMNS	14.2 " "	14.2 " "
CAP	10.0 " "	10.0 " "
WALL	13.7 " "	13.7 " "
TOTAL	43.7 " "	43.7 " "

All dimensions not shown as "CL" are to ℄ of bars.

STRUCTURE NO. H-17-L

COLORADO
DEPARTMENT OF HIGHWAYS

3 SPAN (31'-36'-31') CONTINUOUS CONCRETE SLAB & I BEAM
30'-0" CLEAR RDWY. 75° SKEW
DETAILS OF PIERS 2 & 3

Across Black Squirrel Creek
Sta. 463+52.0 to 464+55.75
Near Husted Sec. 18 T 12 S R 65 W 6th P.M.

Designed by E.F.S. Approved by
Made by L.M.F. Bridge Engineer
Checked by Date:

AS CONSTRUCTED
REVISED DATE 3/23/76

FEDERAL ROAD REGION NO	DIVISION	PROJ. NO.	SHEET NO.	TOTAL SHEETS
VIII	COLORADO	I 25-2(113)	42	

REVISIONS			
R-1	Item 516, Add	Delete	
	Finish note		4-8-75

GENERAL NOTES

ALL WORK SHALL BE DONE ACCORDING TO THE STANDARD SPECIFICATIONS OF THE DIVISION OF HIGHWAYS, STATE OF COLORADO, APPLICABLE TO THE PROJECT.

ALL CONCRETE SURFACES MARKED WITH THE SYMBOL f AS SHOWN ON DRAWING NO. B-25 SHALL RECEIVE A CLASS 2 SURFACE FINISH.

ALL CONCRETE CHAMFERS SHALL BE 3/4 INCH UNLESS OTHERWISE NOTED.

EXPANSION JOINT MATERIAL SHALL MEET A.A.S.H.T.O. SPECIFICATION M-213-65. IT SHALL NOT BE PAID FOR SEPARATELY BUT WILL BE INCLUDED IN THE WORK.

SOUNDINGS AND DEPTH OF FOOTINGS ARE IN ACCORDANCE WITH THE BEST AVAILABLE DATA. WHEN DIFFERENT CONDITIONS ARE ENCOUNTERED, THE BRIDGE ENGINEER WILL INSPECT AND DETERMINE IF REDESIGN IS NECESSARY.

WHEN EXCAVATING FOR FOOTINGS, THE FINAL SIX INCHES IN DEPTH SHALL BE DONE BY HAND LABOR METHODS.

FOOTINGS IN ROCK SHALL NOT BE FORMED BUT SHALL BE PLACED AGAINST UNDISTURBED ROCK.

FOR DETAILS OF STRUCTURE EXCAVATION AND STRUCTURE BACKFILL, SEE STANDARD M-206-4A.

ALL STRUCTURAL STEEL NOT OTHERWISE NOTED SHALL BE A.A.S.H.T.O. SPECIFICATION M-183(ASTM A-36)

ALL STRUCTURAL STEEL NOT OTHERWISE NOTED SHALL BE PAINTED IN ACCORDANCE WITH SECTION 509 FOR (ALUMINUM) PAINT.

ALL BOLTS SHALL BE 3/4" DIAMETER, HIGH STRENGTH, UNLESS OTHERWISE NOTED.

NO WELDING OF ANY KIND SHALL BE PERMITTED ON THE FLANGES OF STEEL GIRDERS UNLESS SPECIFICALLY CALLED FOR ON THE PLANS.

THE FOLLOWING TABLE SHOWS THE MINIMUM LAP FOR COMMON BAR SIZES.

BAR SIZE NUMBER	4	5	6	7	8	9	10	11
SPLICE LENGTH	1'-0"	1'-2"	1'-8"	2'-3"	3'-0"	3'-10"	4'-10"	6'-0"

GRADE 60 REINFORCING STEEL REQUIRED FOR #5 BARS AND LARGER

GRADE 40 OR GRADE 60 MAY BE FURNISHED FOR #4 BARS.

E. F. = EACH FACE
N. F. = NEAR FACE
F. F. = FAR FACE

CROSS REFERENCE DRAWING NUMBER
SECTION OR DETAIL IDENTIFICATION

R-1

Location of all construction joints shall be approved by the Engineer.

SUMMARY OF QUANTITIES

305 Page	Item No.	Description	Unit	Structure Number H-17-J Super-struct.	Abut 1	Pier 2	Pier 3	Abut 4	Total	Structure Number H-17-L Super-struct.	Abut 1	Pier 2	Pier 3	Abut 4	Total	Total H-17-J H-17-L
	202	Removal of Portions of Present Struct.	Ea.						1						1	2
		" As Const.							1						1	2
15	206	Structure Excavation	Cu.Yd.		20	20	20	20	80		20	20	20	20	80	160
		" As Const.							80						80	160
18	206	Structure Backfill (Class 2)	Cu.Yd.		10	15	15	10	50		10	15	10	10	45	95
		" As Const.							50						72	122
21	403	Hot Bituminous Pavement (Gr. E)	Ton	64					64	64					64	128
		" As Const.							*						*	*
	502	Drilling Hole to Facilitate Pile Driving	Lin.Ft.		30			20	50		30			20	50	100
		" As Const.			0			0	0		0			0	0	0
▲	① 502	Steel Piling (HP 10 x 42)	Lin.Ft.		~~46~~	~~66~~	~~69~~	~~69~~	240		~~54~~	~~50~~	~~41~~	~~30~~	180	420
49		" As Const.			71.5	66.4	62.2	44.2	244.3		58.6	47.2	63.8	32.7	201.3	445.6
	② 506	Riprap	Cu.Yd.		25	25			50		27	28			55	105
51		" As Const.							50						55	105
	509	Paint Existing Structure	Ea.						1						1	2
54		" As Const.							1						1	2
	509	Structural Steel	Lb.	21,190	80	680	680	520	22,950	21,170	80	330	330	320	22,230	45,180
55		" As Const.							22,950						22,230	45,180
	509	Structural Steel (Galvanized)	Lb.	4,390					4,390	4,390					4,390	8,780
56		" As Const.							5410						5410	10,820
R-1	515	Waterproofing (Membrane)	Sq.Yd.	161					161	162					162	323
57		" As Const.							484						484	968
	601	Concrete, Class A (Bridge)	Cu.Yd.		5.5	16.7	16.7	6.2	45.1		5.2	17.7	17.7	6.5	47.1	92.2
61		" As Const.							45.1						47.1	92.2
	601	Concrete, Class D (Bridge)	Cu.Yd.	35.6					35.6	36.5					36.5	72.1
62		" As Const.							35.6						36.5	72.1
	602	Reinforcing Steel	Lb.	10,310	655	1845	1845	700	15,355	10,345	655	2000	2000	700	15,700	31,055
63		" As Const.							15,355						15,700	31,055
	606	Guard Rail Type 5A	Lin.Ft.	127					127	128					128	255
80									127						128	255
50	502	STEEL PILE CUT OFF As Const.	Lin.Ft.						7.9						12.1	20.0

① W10 x 42 or HP510 x 42 may be used in lieu of HP10 x 42.
* Includes 9' for 3 welds
② 9" Stone Size.
* INCLUDED IN ROADWAY QUANTITIES ▲ DELETED BY W.O. #05543

APPROACH SLAB QUANTITIES

305 Page	Description	Unit	Str. No. H-17-J Abut 1	Abut 4	Str. No. H-17-L Abut 1	Abut 4	As Const.
58	Concrete	Cu.Yd.	4.1	5.1	5.1	4.1	184
63	Reinforcing Steel	Lb.	475	605	605	475	2160

The above quantities are included in Roadway Summary.

LOADING DATA

LIVELOAD: A.A.S.H.T.O. HS-20-44 OR INTERSTATE ALTERNATE
DEADLOAD: ASSUMES 25 LBS. PER SQ. FT. FOR BITUMINOUS PAVEMENT

DESIGN DATA

A.A.S.H.T.O. 1973 UNIT STRESSES, EXCEPT AS NOTED

REINFORCED CONCRETE: #5 BARS & LARGER, f_s = 24,000 PSI
EXCEPT f_s = 20,000 PSI IN TRANSVERSE DECK SLAB.
#4 BARS f_s = 20,000 PSI
f_c = 1,200 PSI n = 10

STRUCTURAL STEEL: A.A.S.H.T.O. M183(ASTM A-36) f_s = 20,000 PSI
A.A.S.H.T.O. M223(ASTM A-572) f_s = 27,000 PSI

IHLENFELDT PETERSON AND HANEY
INCORPORATED
structural engineers
2145 s. clermont st.
denver, colo 80222
758-4349
Reg. No. 6342 STATE OF COLORADO

Reviewed by P. Chowdhury
Bridge Engineer Date 3/23/76

(11-1-74)

INDEX OF DRAWINGS

Dwg. No. B1 General Information and Summary of Quantities
Dwg. No. B2 General Layout
Dwg. No. B3 Engineering Geology
Dwg. No. B4 Elevations (H-17-J)
Dwg. No. B5 Elevations (H-17-L)
Dwg. No. B6 Construction Layout and Piling Layout (H-17-J)
Dwg. No. B7 Construction Layout and Piling Layout (H-17-L)
Dwg. No. B8 Abutment Details (H-17-J)
Dwg. No. B9 Abutment Details (H-17-J)
Dwg. No. B10 Abutment Details (H-17-J)
Dwg. No. B11 Abutment Details (H-17-L)
Dwg. No. B12 Abutment Details (H-17-L)
Dwg. No. B13 Abutment Details (H-17-L)
Dwg. No. B14 Pier Details (H-17-J)
Dwg. No. B15 Pier Details (H-17-L)
Dwg. No. B16 Pier Details
Dwg. No. B17 Superstructure Details (H-17-J)
Dwg. No. B18 Superstructure Details (H-17-L)
Dwg. No. B19 Superstructure Details
Dwg. No. B20 Superstructure Details
Dwg. No. B21 Superstructure Details
Dwg. No. B22 Superstructure Details (H-17-J)
Dwg. No. B23 Superstructure Details (H-17-L)
Dwg. No. B24 Bridge Rail Type 5
Dwg. No. B25 Approach Slab Details and Miscellaneous Details
Dwg. No. B26 Structure Number Standard

BRIDGE DESCRIPTION
3 Spans (31'-0", 38'-0", 31'-0") Continuous Concrete Slab and I-Beam Girder Bridge

Over Black Squirrel Creek
42'-0" Roadway Curb to Curb, 75° Skew, 1'-8" and 2'-0" Curbs, Bridge Rail Type 5.

DIVISION OF HIGHWAYS

GENERAL INFORMATION
SUMMARY OF QUANTITIES

Station 483+66.46 to 484+70.19 (H-17-J)
Station 483+52.00 to 484+55.78 (H-17-L)

Near Colo. Spgs. Sec. 18 T. 12S R. 66W

Designer	D. Peterson	Structure Numbers	H-17-J
Detailer	B. Walton		H-17-L

Drawing Number B 1 of 26 Drawings

Revision Dates (Preliminary Stage Only)

AS CONSTRUCTED
NO REVISIONS DATE 3/23/76

FEDERAL ROAD REGION NO.	DISTRICT	PROJ. NO.	SHEET NO.	TOTAL SHEETS
XIII	COLORADO	I 25 - 2(113)	43	

REVISIONS

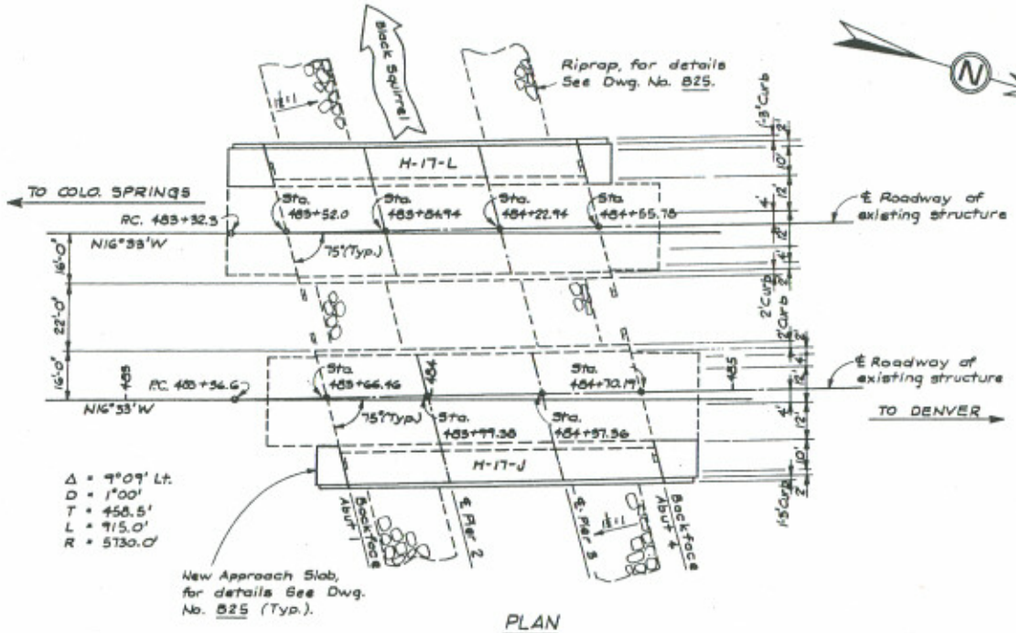

PLAN

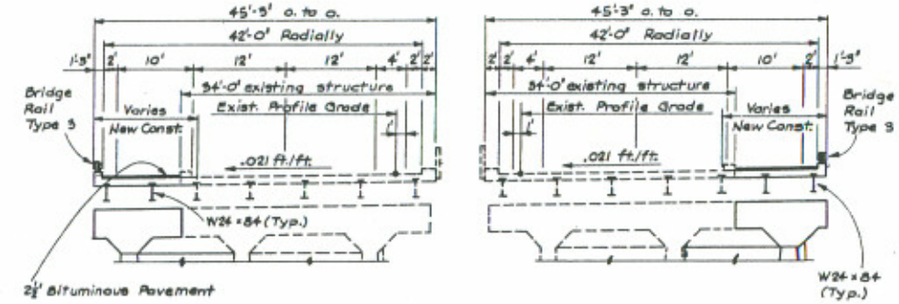

H-17-L H-17-J

TYPICAL SECTION

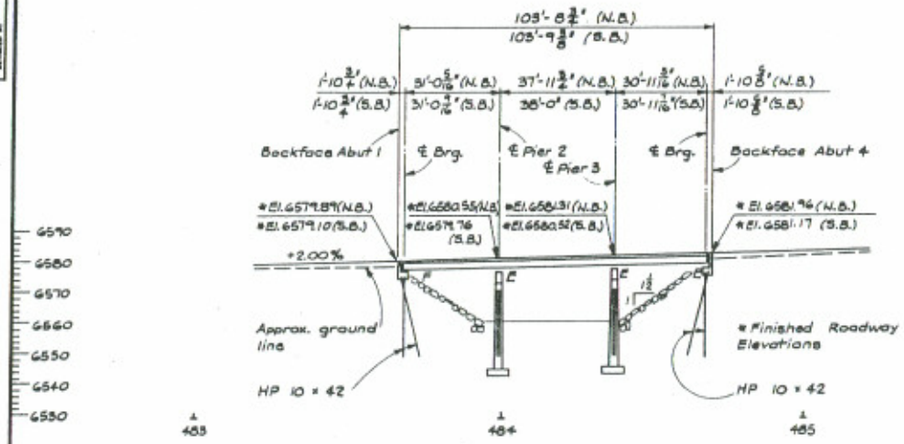

SECTION TAKEN AT ℄ ROADWAY OF EXIST. STR. NO. H-17-J

Note: Section at ℄ Roadway of Exist. Str. No. H-17-L similar except as noted.

Note:
New portion of Piers shall be founded on HP 10 × 42's.

For estimated pile lengths at Abutments and Piers, See Dwg. No's. B6 and B7.

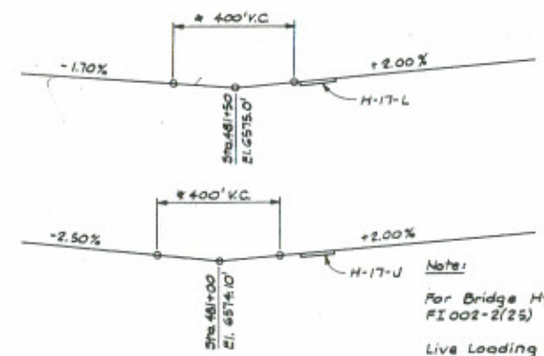

PROFILE GRADE DIAGRAMS

* Adjust elevations of roadway to match new structure elevations.

Note:
For Bridge Hydraulics See Project FI 002-2(25) Unit #2.

Live Loading HS 20-44 or Interstate Alternate.

DIVISION OF HIGHWAYS

GENERAL LAYOUT

Designer	D. Peterson	Structure Numbers	H-17-J Northbound
Detailer	B. Walton		H-17-L Southbound
Drawing Number B 2 of 26 Drawings			

FED. ROAD REG. NO.	DIVISION	PROJECT NO.	SHEET NO.	TOTAL SHEETS
9	COLO.	I25-2(113)	44	

AS CONSTRUCTED
NO REVISIONS DATE 3/23/76

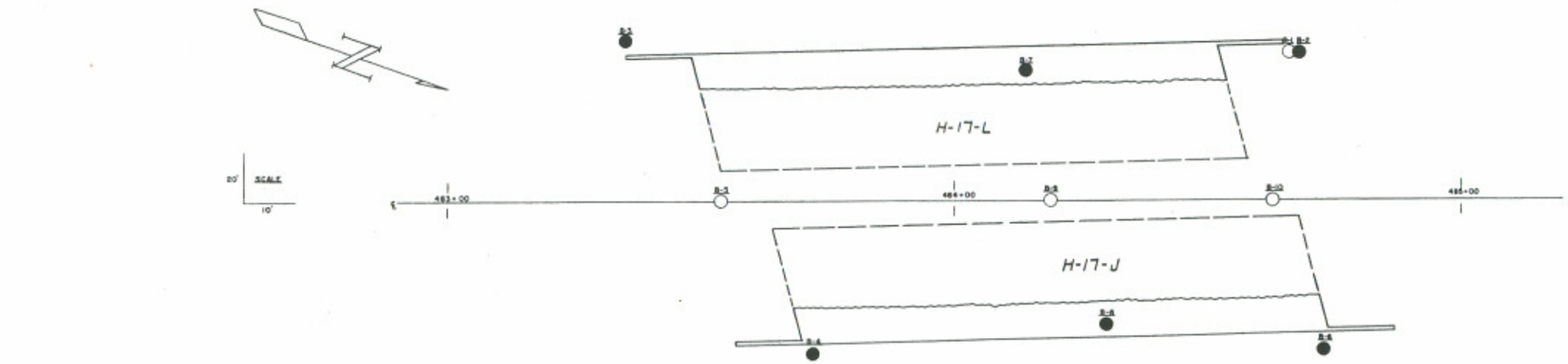

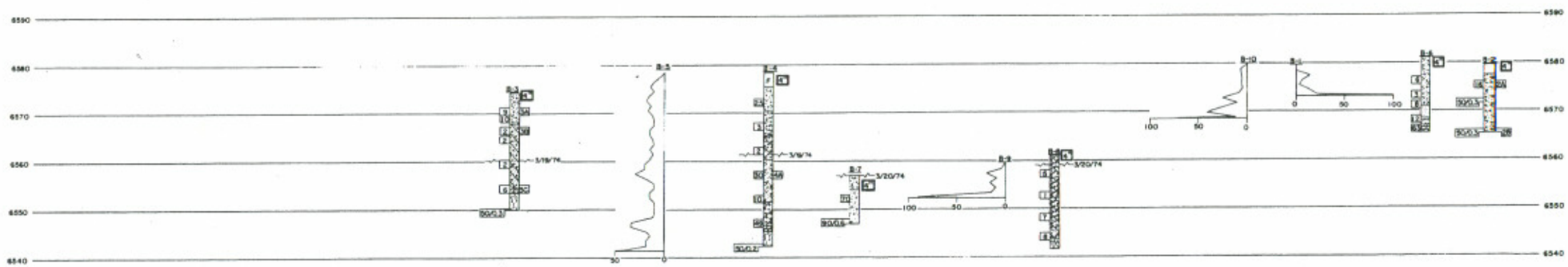

SUMMARY OF TEST RESULTS

Sample No.	Depth	Classification: Group of Report or Visual	Classification: AASHO	Grading Analysis, Percent: Gravel	Coarse Sand	Fine Sand	Silt and Clay	Atterberg Limits: Liquid Limit L_w	Plastic Limit P_w	Plasticity Index I_w	Water Cont. w %	Wet Unit Weight γ P.C.F.	Unconfined Strength Q_u T.S.F.	Triaxial Shear Strength, Unconsolidated: φ°	c T.S.F.	Consolidated: φ°	c T.S.F.	Time hrs.	Press. P.S.I.	Dry Sp. Gr. Sample Shalow?
2A	3.5-5.0	GRAVELLY SAND	A-1-b(0)	36	46	12	6	NV	NP	NP	5.5									
2B	13.5-14.5	SAND	A-1-b(0)	12	47	33	8	NV	NP	NP	11.5									
3A	3.0-4.5	SILTY GRAVELLY SAND	A-1-b(0)	25	36	25	14	NV	NP	NP	8.4									
3B	7.0-8.5	SILTY SAND	A-2-4(0)	13	23	35	29	25	19	6	13.3									
3C	20.0-20.5	CLAYEY GRAVELLY SAND	A-2-4(0)	18	24	26	32	29	19	10	20.0									
4A	20.5-22.0	GRAVELLY SAND	A-1-b(0)	28	41	23	8	NV	NP	NP	13.4									

TYPE OF MATERIAL

- SILTY, CLAYEY GRAVEL
- SANDY GRAVEL
- SAND
- FILL
- CLAYEY GRAVEL
- CLAYSTONE
- GRAVELLY, SANDY CLAY
- SANDSTONE
- SILTY SAND & GRAVEL
- SILTSTONE
- SILTY GRAVEL
- GRAVELLY CLAY
- SANDY, CLAYEY GRAVEL
- ASPHALT & CONCRETE

LEGEND

SANDSTONE & CLAYSTONE INTERLAYERED

TEST BORING

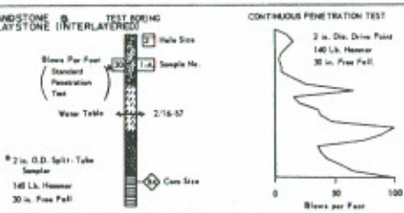

CONTINUOUS PENETRATION TEST

- Location of Test Boring
- Location of Continuous Penetration Test
- Rotary Boring
- Auger Boring
- Core Boring

STRUCTURE NO. H-17-J & H-17-L
DWG. NO. 8 5 OF 26

DIVISION OF HIGHWAYS
STATE OF COLORADO

ENGINEERING GEOLOGY

Across BLACK SQUIRREL CREEK
On
Near COLO. SPRINGS Sec. 10, T. 12 S. R. 66 W.

Geologist K.R.B.
Made by D.L.S.
Checked by D.L.S.

Approved by
Bridge Engineer
Date: 19

AS CONSTRUCTED
3/23/76

FEDERAL ROAD PROJECT NO	DISTRICT	PROJ NO	SHEET NO	TOTAL SHEETS
XIII	COLORADO	I25-2(113)	45	

REVISIONS

STR NO H-17-J OVER BLACK SQUIRREL CK.
PROJECT NO I25-2(113)
ELEVATIONS ARE AT TOP OF CONCRETE

* * * INPUT DATA * * *

HORIZONTAL ALIGNMENT DATA.....

DEGREE OF CURVATURE 1 0 0 .0 T.C. STATION 483+36.68 C.T. STATION 492+51.68

VERTICAL ALIGNMENT DATA.....

VERTICAL CURVE NO. 1 : PI STATION 481+ .80 PI ELEV 6574.100 VC LENGTH 400.000 G1 -2.500000 G2 2.000000

SUPERELEVATION DATA.....

SUPERELEVATION NO. 1 : STATION 0+ .00 RATE LEFT -.0210 RATE RIGHT .0210

DESCRIPTION OF BENT LINE	DESCRIPTION OF LINE	SKEW ANGLE OF BENT LINE REFERENCED TO CHORD OR TANGENT	STATION OF INTERSECTION OF LINE AND BENT LINE	ROADWAY ELEVATION AT INTERSECTION OF LINE AND BENT LINE
END WING AB	CONSTR. CL -15 0 .0 LEFT SKEW		483+54.460	6579.4412
	PROFILE GR		483+51.278	6579.1256
	CL EX. STR		483+54.460	6579.4412
	TAN TO POC		483+54.489	6579.4440
	CL EX. GOR		483+58.331	6579.8267
	CL NEW G2		483+59.966	6579.9839
	CL NEW G1		483+61.477	6580.1411
	EAST IN		483+61.570	6580.1504
	EAST OUT		483+61.897	6580.1832
BF ABUT 1-REF	CONSTR. CL -15 0 .0 LEFT SKEW		483+66.468	6579.6812
	PROFILE GR		483+63.305	6579.3661
	CL EX. STR		483+66.460	6579.6812
	TAN TO POC		483+66.582	6579.6954
	CL EX. GOR		483+70.272	6580.0633
	CL NEW G2		483+71.834	6580.2204
	CL NEW G1		483+73.393	6580.3774
	EAST IN		483+73.518	6580.3892
	EAST OUT		483+73.834	6580.4219
CL BRG ABUT 1	CONSTR. CL -15 0 .0 LEFT SKEW		483+68.355	6579.7191
	PROFILE GR		483+65.204	6579.4041
	CL EX. STR		483+68.355	6579.7191
	TAN TO POC		483+68.399	6579.7235
	CL EX. GOR		483+72.158	6580.1088
	CL NEW G2		483+73.718	6580.2578
	CL NEW G1		483+75.275	6580.4148
	EAST IN		483+75.395	6580.4269
	EAST OUT		483+75.720	6580.4596
1/ 10 PT.* 1	CONSTR. CL -15 0 .0 LEFT SKEW		483+71.441	6579.7812
	PROFILE GR		483+68.316	6579.4663
	CL EX. STR		483+71.441	6579.7812
	TAN TO POC		483+71.509	6579.7881
	CL EX. GOR		483+75.250	6580.1621
	CL NEW G2		483+76.806	6580.3191
	CL NEW G1		483+78.360	6580.4760
	EAST IN		483+78.485	6580.4887
	EAST OUT		483+78.809	6580.5214
2/ 10 PT.* 1	CONSTR. CL -15 0 .0 LEFT SKEW		483+76.566	6579.8433
	PROFILE GR		483+73.428	6579.5286
	CL EX. STR		483+76.566	6579.8433
	TAN TO POC		483+76.619	6579.8487
	CL EX. GOR		483+78.341	6580.2236
	CL NEW G2		483+79.895	6580.3805
	CL NEW G1		483+81.445	6580.5374
	EAST IN		483+81.575	6580.5505
	EAST OUT		483+81.897	6580.5832
3/ 10 PT.* 1	CONSTR. CL -15 0 .0 LEFT SKEW		483+77.670	6579.9654
	PROFILE GR		483+74.544	6579.5968
	CL EX. STR		483+77.670	6579.9654
	TAN TO POC		483+77.729	6579.9114
	CL EX. GOR		483+81.432	6580.2858
	CL NEW G2		483+82.983	6580.4419
	CL NEW G1		483+84.538	6580.5987
	EAST IN		483+84.664	6580.6123
	EAST OUT		483+84.986	6580.6450
4/ 10 PT.* 1	CONSTR. CL -15 0 .0 LEFT SKEW		483+80.774	6579.9675
	PROFILE GR		483+77.651	6579.6538
	CL EX. STR		483+80.774	6579.9675
	TAN TO POC		483+80.839	6579.9741
	CL EX. GOR		483+84.524	6580.3465
	CL NEW G2		483+86.071	6580.5033
	CL NEW G1		483+87.615	6580.6601
	EAST IN		483+87.752	6580.6740
	EAST OUT		483+88.074	6580.7067
5/ 10 PT.* 1	CONSTR. CL -15 0 .0 LEFT SKEW		483+83.878	6580.0296
	PROFILE GR		483+80.762	6579.7152
	CL EX. STR		483+83.878	6580.0296
	TAN TO POC		483+83.949	6580.0368
	CL EX. GOR		483+87.616	6580.4080
	CL NEW G2		483+89.159	6580.5648
	CL NEW G1		483+90.700	6580.7215
	EAST IN		483+90.846	6580.7358
	EAST OUT		483+91.161	6580.7685
6/ 10 PT.* 1	CONSTR. CL -15 0 .0 LEFT SKEW		483+86.981	6580.8916
	PROFILE GR		483+83.872	6579.7774
	CL EX. STR		483+86.981	6580.8916
	TAN TO POC		483+87.059	6580.8995
	CL EX. GOR		483+90.767	6580.4696
	CL NEW G2		483+92.248	6580.6263
	CL NEW G1		483+93.785	6580.7830
	EAST IN		483+93.928	6580.7974
	EAST OUT		483+94.248	6580.8302
7/ 10 PT.* 1	CONSTR. CL -15 0 .0 LEFT SKEW		483+90.084	6580.1537
	PROFILE GR		483+86.982	6579.8396
	CL EX. STR		483+90.084	6580.1537
	TAN TO POC		483+90.164	6580.1623
	CL EX. GOR		483+93.799	6580.5311
	CL NEW G2		483+95.136	6580.6878
	CL NEW G1		483+96.476	6580.8445
	EAST IN		483+97.015	6580.8593
	EAST OUT		483+97.339	6580.8919
8/ 10 PT.* 1	CONSTR. CL -15 0 .0 LEFT SKEW		483+93.186	6580.2157
	PROFILE GR		483+90.091	6579.9018
	CL EX. STR		483+93.186	6580.2157
	TAN TO POC		483+93.279	6580.2252
	CL EX. GOR		483+96.890	6580.5928
	CL NEW G2		483+98.424	6580.7494
	CL NEW G1		483+99.956	6580.9060
	EAST IN		484+ .162	6580.9218
	EAST OUT		484+ .421	6580.9537
9/ 10 PT.* 1	CONSTR. CL -15 0 .0 LEFT SKEW		483+96.288	6580.2778
	PROFILE GR		483+93.280	6579.9648
	CL EX. STR		483+96.288	6580.2778
	TAN TO POC		483+96.389	6580.2880
	CL EX. GOR		483+99.982	6580.6544
	CL NEW G2		484+ 1.513	6580.8110
	CL NEW G1		484+ 3.041	6580.9676
	EAST IN		484+ 3.189	6580.9828
	EAST OUT		484+ 3.507	6581.0154
CL PIER 2	CONSTR. CL -15 0 .0 LEFT SKEW		483+99.380	6580.3396
	PROFILE GR		483+96.298	6580.6263
	CL EX. STR		483+99.380	6580.3396
	TAN TO POC		483+99.556	6580.3576
	CL EX. GOR		484+ 3.063	6580.7159
	CL NEW G2		484+ 4.591	6580.8725
	CL NEW G1		484+ 6.116	6581.0290
	EAST IN		484+ 6.265	6581.0443
	EAST OUT		484+ 6.582	6581.0769
1/ 10 PT.* 1	CONSTR. CL -15 0 .0 LEFT SKEW		484+ 3.181	6580.1822
	PROFILE GR		484+ .168	6580.1822
	CL EX. STR		484+ 3.181	6580.6156
	TAN TO POC		484+ 3.368	6580.6347
	CL EX. GOR		484+ 6.852	6580.7915
	CL NEW G2		484+ 8.376	6580.9480
	CL NEW G1		484+ 9.897	6581.1045
	EAST IN		484+10.047	6581.1199
	EAST OUT		484+10.363	6581.1525
2/ 10 PT.* 1	CONSTR. CL -15 0 .0 LEFT SKEW		484+ 6.982	6580.4916
	PROFILE GR		484+ 3.917	6580.1783
	CL EX. STR		484+ 6.982	6580.4916
	TAN TO POC		484+ 7.180	6580.5119
	CL EX. GOR		484+10.641	6580.8672
	CL NEW G2		484+12.161	6581.0236
	CL NEW G1		484+13.678	6581.1808
	EAST IN		484+13.829	6581.1956
	EAST OUT		484+14.144	6581.2281
3/ 10 PT.* 1	CONSTR. CL -15 0 .0 LEFT SKEW		484+10.782	6580.5676
	PROFILE GR		484+ 7.726	6580.2545
	CL EX. STR		484+10.782	6580.5676
	TAN TO POC		484+10.991	6580.5892
	CL EX. GOR		484+14.430	6580.9429
	CL NEW G2		484+15.946	6581.0992
	CL NEW G1		484+17.459	6581.2556
	EAST IN		484+17.610	6581.2712
	EAST OUT		484+17.924	6581.3037
4/ 10 PT.* 1	CONSTR. CL -15 0 .0 LEFT SKEW		484+14.581	6580.8436
	PROFILE GR		484+11.534	6580.3387
	CL EX. STR		484+14.581	6580.8436
	TAN TO POC		484+14.803	6580.8665
	CL EX. GOR		484+18.219	6581.2184
	CL NEW G2		484+19.731	6581.3749
	CL NEW G1		484+21.248	6581.5312
	EAST IN		484+21.398	6581.5468
	EAST OUT		484+21.704	6581.5793
5/ 10 PT.* 1	CONSTR. CL -15 0 .0 LEFT SKEW		484+18.340	6580.7196
	PROFILE GR		484+15.341	6580.4068
	CL EX. STR		484+18.380	6580.7196
	TAN TO POC		484+18.615	6580.7438
	CL EX. GOR		484+22.088	6581.0944
	CL NEW G2		484+23.516	6581.2507
	CL NEW G1		484+25.021	6581.4069
	EAST IN		484+25.176	6581.4224
	EAST OUT		484+25.483	6581.4549
6/ 10 PT.* 1	CONSTR. CL -15 0 .0 LEFT SKEW		484+22.178	6580.7956
	PROFILE GR		484+19.147	6580.4829
	CL EX. STR		484+22.178	6580.7956
	TAN TO POC		484+22.426	6580.8212
	CL EX. GOR		484+25.796	6581.1782
	CL NEW G2		484+27.380	6581.3265
	CL NEW G1		484+28.801	6581.4826
	EAST IN		484+28.949	6581.4980
	EAST OUT		484+29.261	6581.5305
7/ 10 PT.* 1	CONSTR. CL -15 0 .0 LEFT SKEW		484+25.975	6581.8715
	PROFILE GR		484+22.953	6580.5591
	CL EX. STR		484+25.975	6580.8715
	TAN TO POC		484+26.237	6580.8987
	CL EX. GOR		484+29.585	6581.2461
	CL NEW G2		484+31.085	6581.4023
	CL NEW G1		484+32.582	6581.5584
	EAST IN		484+32.728	6581.5736
	EAST OUT		484+33.039	6581.6060
8/ 10 PT.* 1	CONSTR. CL -15 0 .0 LEFT SKEW		484+29.772	6580.9474
	PROFILE GR		484+26.758	6580.6352
	CL EX. STR		484+29.772	6580.9474
	TAN TO POC		484+30.049	6580.9762
	CL EX. GOR		484+33.374	6581.3221
	CL NEW G2		484+34.870	6581.4782
	CL NEW G1		484+36.363	6581.6342
	EAST IN		484+36.505	6581.6491
	EAST OUT		484+36.816	6581.6816
9/ 10 PT.* 1	CONSTR. CL -15 0 .0 LEFT SKEW		484+33.568	6581.0234
	PROFILE GR		484+30.563	6580.7113
	CL EX. STR		484+33.568	6581.0234
	TAN TO POC		484+33.860	6581.0537
	CL EX. GOR		484+37.163	6581.3981
	CL NEW G2		484+38.655	6581.5541
	CL NEW G1		484+40.144	6581.7101
	EAST IN		484+40.283	6581.7247
	EAST OUT		484+40.592	6581.7571
CL PIER 3	CONSTR. CL -15 0 .0 LEFT SKEW		484+37.366	6581.0992
	PROFILE GR		484+34.363	6580.7873
	CL EX. STR		484+37.366	6581.0992
	TAN TO POC		484+37.803	6581.1454
	CL EX. GOR		484+40.948	6581.4741
	CL NEW G2		484+42.436	6581.6381
	CL NEW G1		484+43.921	6581.7860
	EAST IN		484+44.056	6581.8001
	EAST OUT		484+44.364	6581.8325
1/ 10 PT.* 1	CONSTR. CL -15 0 .0 LEFT SKEW		484+40.456	6581.1611
	PROFILE GR		484+37.486	6580.8493
	CL EX. STR		484+40.456	6581.1611
	TAN TO POC		484+40.912	6581.2088
	CL EX. GOR		484+44.029	6581.5363
	CL NEW G2		484+45.524	6581.6922
	CL NEW G1		484+47.004	6581.8478
	EAST IN		484+47.136	6581.8617
	EAST OUT		484+47.444	6581.8941
2/ 10 PT.* 1	CONSTR. CL -15 0 .0 LEFT SKEW		484+43.551	6581.2230
	PROFILE GR		484+40.568	6580.9114
	CL EX. STR		484+43.551	6581.2230
	TAN TO POC		484+44.021	6581.2722
	CL EX. GOR		484+47.131	6581.5985
	CL NEW G2		484+48.613	6581.7543
	CL NEW G1		484+50.087	6581.9097
	EAST IN		484+50.216	6581.9233
	EAST OUT		484+50.523	6581.9557
3/ 10 PT.* 1	CONSTR. CL -15 0 .0 LEFT SKEW		484+46.646	6581.2849
	PROFILE GR		484+43.678	6580.9734
	CL EX. STR		484+46.646	6581.2849
	TAN TO POC		484+47.129	6581.3356
	CL EX. GOR		484+50.222	6581.6687
	CL NEW G2		484+51.781	6581.8165
	CL NEW G1		484+53.178	6581.9716
	EAST IN		484+53.296	6581.9849
	EAST OUT		484+53.602	6582.0173
4/ 10 PT.* 1	CONSTR. CL -15 0 .0 LEFT SKEW		484+49.741	6581.3468
	PROFILE GR		484+46.772	6581.0354
	CL EX. STR		484+49.741	6581.3468
	TAN TO POC		484+50.238	6581.3990
	CL EX. GOR		484+53.314	6581.7229
	CL NEW G2		484+54.789	6581.8787
	CL NEW G1		484+56.252	6582.0335
	EAST IN		484+56.375	6582.0465
	EAST OUT		484+56.681	6582.0789
5/ 10 PT.* 1	CONSTR. CL -15 0 .0 LEFT SKEW		484+52.835	6581.4887
	PROFILE GR		484+49.873	6581.0875
	CL EX. STR		484+52.835	6581.4887
	TAN TO POC		484+53.344	6581.4425
	CL EX. GOR		484+56.465	6581.7852
	CL NEW G2		484+57.877	6581.9410
	CL NEW G1		484+59.335	6582.0955
	EAST IN		484+59.454	6582.1081
	EAST OUT		484+59.759	6582.1404
6/ 10 PT.* 1	CONSTR. CL -15 0 .0 LEFT SKEW		484+55.929	6581.4786
	PROFILE GR		484+52.974	6581.1595
	CL EX. STR		484+55.929	6581.4786
	TAN TO POC		484+56.455	6581.5260
	CL EX. GOR		484+59.497	6581.8476
	CL NEW G2		484+60.986	6582.0033
	CL NEW G1		484+62.418	6582.1575
	EAST IN		484+62.532	6582.1696
	EAST OUT		484+62.837	6582.2020
7/ 10 PT.* 1	CONSTR. CL -15 0 .0 LEFT SKEW		484+59.623	6581.5325
	PROFILE GR		484+56.074	6581.2215
	CL EX. STR		484+59.623	6581.5325
	TAN TO POC		484+59.563	6581.5896
	CL EX. GOR		484+62.588	6581.9099
	CL NEW G2		484+64.054	6582.0656
	CL NEW G1		484+65.501	6582.2195
	EAST IN		484+65.619	6582.2312
	EAST OUT		484+65.914	6582.2635
8/ 10 PT.* 1	CONSTR. CL -15 0 .0 LEFT SKEW		484+62.116	6581.5943
	PROFILE GR		484+59.174	6581.2835
	CL EX. STR		484+62.116	6581.5943
	TAN TO POC		484+62.671	6581.6532
	CL EX. GOR		484+65.679	6581.9723
	CL NEW G2		484+67.142	6582.1279
	CL NEW G1		484+68.583	6582.2816
	EAST IN		484+68.688	6582.2928
	EAST OUT		484+68.991	6582.3251
9/ 10 PT.* 1	CONSTR. CL -15 0 .0 LEFT SKEW		484+65.288	6581.6562
	PROFILE GR		484+62.274	6581.3455
	CL EX. STR		484+65.288	6581.6562
	TAN TO POC		484+65.788	6581.7168
	CL EX. GOR		484+68.771	6582.0348
	CL NEW G2		484+70.238	6582.1903
	CL NEW G1		484+71.664	6582.3437
	EAST IN		484+71.765	6582.3543
	EAST OUT		484+72.067	6582.3866
CL BRG ABUT 4	CONSTR. CL -15 0 .0 LEFT SKEW		484+68.388	6581.7188
	PROFILE GR		484+65.373	6581.4075
	CL EX. STR		484+68.388	6581.7188
	TAN TO POC		484+68.888	6581.7696
	CL EX. GOR		484+71.862	6582.0973
	CL NEW G2		484+73.318	6582.2528
	CL NEW G1		484+74.749	6582.4058
	EAST IN		484+74.842	6582.4158
	EAST OUT		484+75.143	6582.4481
BF ABUT 4	CONSTR. CL -15 0 .0 LEFT SKEW		484+70.187	6581.7557
	PROFILE GR		484+67.263	6581.4453
	CL EX. STR		484+70.187	6581.7557
	TAN TO POC		484+70.784	6581.8193
	CL EX. GOR		484+73.748	6582.1354
	CL NEW G2		484+75.282	6582.2749
	CL NEW G1		484+76.630	6582.4138
	EAST IN		484+76.719	6582.4234
	EAST OUT		484+77.020	6582.4857
END WING AB 4	CONSTR. CL -15 0 .0 LEFT SKEW		484+82.366	6581.9992
	PROFILE GR		484+79.483	6581.6893
	CL EX. STR		484+82.366	6581.9992
	TAN TO POC		484+83.024	6582.0704
	CL EX. GOR		484+85.922	6582.3818
	CL NEW G2		484+87.363	6582.5371
	CL NEW G1		484+88.775	6582.6889
	EAST IN		484+88.832	6582.6956
	EAST OUT		484+89.138	6582.7279

INITIAL	DATE	CHECKED BY	QUANTITIES BY	CHECKED BY

DESIGNED BY	CHECKED BY	DETAILED BY

DIVISION OF HIGHWAYS

ELEVATIONS
H-17-J NORTHBOUND

Designer	D. Peterson	Structure	H-17-J Northbound
Detailer	B. Welten	Numbers	H-17-L Southbound
Drawing Number B 4		of 26	Drawings

AS CONSTRUCTED
NO REVISIONS DATE 3/23/76

FEDERAL ROAD REGION NO	DISTRICT	PROJ NO
VIII	COLORADO	I25-2(113)

REVISION

STR NO H-17-L OVER BLACK SQUIRREL CK.
PROJECT NO I25-2(113)
ELEVATIONS ARE AT TOP OF CONCRETE

* * * INPUT DATA * * *

HORIZONTAL ALIGNMENT DATA.....

DEGREE OF CURVATURE : 9 9 .0 T.C. STATION 483+32.36 C.T. STATION 492+47.30

VERTICAL ALIGNMENT DATA.....

VERTICAL CURVE NO. 1 : PI STATION 481+50.00 PI ELEV 6575.100 VC LENGTH 400.000 G1 -1.700000 G2 2.000000

SUPERELEVATION DATA.....

SUPERELEVATION NO. 1 : STATION 0+ .00 RATE LEFT -.0210 RATE RIGHT .0210

DESCRIPTION OF BENT LINE	DESCRIPTION OF LINE	SKEW ANGLE OF BENT LINE REFERENCED TO CHORD OR TANGENT	STATION OF INTERSECTION OF LINE AND BENT LINE	ROADWAY ELEVATION AT INTERSECTION OF LINE AND BENT LINE
END WING A6 : CONSTR. CL -15 0 .0 LEFT SKEW			483+40.080	6578.6526
	WEST OUT		483+32.432	6577.9177
	WEST IN		483+32.749	6577.9501
	CL NEW G1		483+32.980	6577.9633
	CL NEW G2		483+34.586	6578.1259
	CL Ex. GDR		483+36.285	6578.2826
	CL Ex. STR		483+41.808	6578.6526
	TAN TO POC		483+4.811	6578.6537
	PROFILE GR		483+43.191	6578.9660
BF ABUT 1-REF CONSTR. CL -15 0 .0 LEFT SKEW			483+52.080	6578.8888
	WEST OUT		483+44.496	6578.1461
	WEST IN		483+44.830	6578.1788
	CL NEW G1		483+45.085	6578.1968
	CL NEW G2		483+46.680	6578.3534
	CL Ex. GDR		483+48.281	6578.5111
	CL Ex. STR		483+52.888	6578.8888
	TAN TO POC		483+52.818	6578.8898
	PROFILE GR		483+95.184	6579.2933
CL BRG ABUT 1 : CONSTR. CL -15 0 .0 LEFT SKEW			483+53.896	6578.9259
	WEST OUT		483+46.422	6578.1834
	WEST IN		483+46.735	6578.2162
	CL NEW G1		483+46.985	6578.2329
	CL NEW G2		483+48.499	6578.3982
	CL Ex. GDR		483+50.097	6578.5485
	CL Ex. STR		483+53.896	6578.9259
	TAN TO POC		483+53.915	6578.9279
	PROFILE GR		483+57.156	6579.2411
1/ 10 PT.= : CONSTR. CL -15 0 .0 LEFT SKEW			483+57.803	6578.9881
	WEST OUT		483+49.526	6578.2453
	WEST IN		483+49.858	6578.2782
	CL NEW G1		483+50.029	6578.2942
	CL NEW G2		483+51.610	6578.4517
	CL Ex. GDR		483+53.285	6578.6100
	CL Ex. STR		483+57.083	6578.9881
	TAN TO POC		483+57.026	6578.9904
	PROFILE GR		483+60.156	6579.3031
2/ 10 PT.= : CONSTR. CL -15 0 .0 LEFT SKEW			483+60.189	6579.0502
	WEST OUT		483+52.648	6578.3277
	WEST IN		483+52.980	6578.3606
	CL NEW G1		483+53.135	6578.3559
	CL NEW G2		483+54.722	6578.5134
	CL Ex. GDR		483+56.312	6578.6716
	CL Ex. STR		483+60.109	6579.0502
	TAN TO POC		483+60.136	6579.0529
	PROFILE GR		483+63.294	6579.3651
3/ 10 PT.= : CONSTR. CL -15 0 .0 LEFT SKEW			483+63.215	6579.1123
	WEST OUT		483+55.771	6578.3782
	WEST IN		483+56.102	6578.4938
	CL NEW G1		483+56.251	6578.4177
	CL NEW G2		483+57.833	6578.5751
	CL Ex. GDR		483+59.428	6578.7331
	CL Ex. STR		483+63.215	6579.1123
	TAN TO POC		483+63.246	6579.1154
	PROFILE GR		483+66.355	6579.4271
4/ 10 PT.= : CONSTR. CL -15 0 .0 LEFT SKEW			483+66.321	6579.1744
	WEST OUT		483+58.893	6578.4326
	WEST IN		483+59.223	6578.4655
	CL NEW G1		483+59.385	6578.4795
	CL NEW G2		483+60.945	6578.6369
	CL Ex. GDR		483+62.527	6578.7948
	CL Ex. STR		483+66.321	6579.1744
	TAN TO POC		483+66.357	6579.1780
	PROFILE GR		483+69.453	6579.4891
5/ 10 PT.= : CONSTR. CL -15 0 .0 LEFT SKEW			483+69.426	6579.2365
	WEST OUT		483+62.014	6578.4950
	WEST IN		483+62.344	6578.5279
	CL NEW G1		483+62.479	6578.5414
	CL NEW G2		483+64.056	6578.6987
	CL Ex. GDR		483+65.634	6578.8564
	CL Ex. STR		483+69.426	6579.2365
	TAN TO POC		483+69.467	6579.2406
	PROFILE GR		483+72.551	6579.5510
6/ 10 PT.= : CONSTR. CL -15 0 .0 LEFT SKEW			483+72.531	6579.2986
	WEST OUT		483+65.136	6578.5575
	WEST IN		483+65.464	6578.5903
	CL NEW G1		483+65.594	6578.6033
	CL NEW G2		483+67.168	6578.7609
	CL Ex. GDR		483+68.742	6578.9181
	CL Ex. STR		483+72.531	6579.2986
	TAN TO POC		483+72.577	6579.3033
	PROFILE GR		483+75.649	6579.6130
7/ 10 PT.= : CONSTR. CL -15 0 .0 LEFT SKEW			483+75.635	6579.3667
	WEST OUT		483+68.256	6578.6199
	WEST IN		483+68.586	6578.6527
	CL NEW G1		483+68.709	6578.6652
	CL NEW G2		483+78.283	6578.6224
	CL Ex. GDR		483+71.849	6578.9799
	CL Ex. STR		483+75.635	6579.3667
	TAN TO POC		483+75.687	6579.3659
	PROFILE GR		483+78.746	6579.6749
8/ 10 PT.= : CONSTR. CL -15 0 .0 LEFT SKEW			483+78.739	6579.4228
	WEST OUT		483+71.376	6578.6823
	WEST IN		483+71.704	6578.7151
	CL NEW G1		483+71.824	6578.7271
	CL NEW G2		483+73.391	6578.8843
	CL Ex. GDR		483+74.957	6579.0417
	CL Ex. STR		483+78.739	6579.4228
	TAN TO POC		483+78.797	6579.4286
	PROFILE GR		483+81.843	6579.7369
9/ 10 PT.= : CONSTR. CL -15 0 .0 LEFT SKEW			483+81.842	6579.4848
	WEST OUT		483+74.496	6578.7447
	WEST IN		483+74.823	6578.7775
	CL NEW G1		483+74.939	6578.7891
	CL NEW G2		483+76.503	6578.9463
	CL Ex. GDR		483+78.065	6579.1035
	CL Ex. STR		483+81.842	6579.4848
	TAN TO POC		483+81.907	6579.4914
	PROFILE GR		483+84.943	6579.7948
CL PIER 2	CONSTR. CL -15 0 .0 LEFT SKEW		483+84.945	6579.5449
	WEST OUT		483+77.616	6578.8071
	WEST IN		483+77.941	6578.8398
	CL NEW G1		483+78.054	6578.8512
	CL NEW G2		483+79.615	6579.0083
	CL Ex. GDR		483+81.172	6579.1653
	CL Ex. STR		483+84.945	6579.5449
	TAN TO POC		483+85.017	6579.5522
	PROFILE GR		483+88.036	6579.8607
1/ 10 PT.= : CONSTR. CL -15 0 .0 LEFT SKEW			483+88.743	6579.6229
	WEST OUT		483+81.434	6578.8834
	WEST IN		483+81.754	6578.9162
	CL NEW G1		483+81.867	6578.9271
	CL NEW G2		483+83.424	6579.0841
	CL Ex. GDR		483+84.977	6579.2411
	CL Ex. STR		483+88.743	6579.6229
	TAN TO POC		483+88.877	6579.6365
	PROFILE GR		483+91.875	6579.9365
2/ 10 PT.= : CONSTR. CL -15 0 .0 LEFT SKEW			483+92.545	6579.6989
	WEST OUT		483+85.256	6578.9549
	WEST IN		483+85.580	6578.9926
	CL NEW G1		483+85.685	6579.0132
	CL NEW G2		483+87.237	6579.1682
	CL Ex. GDR		483+88.787	6579.3171
	CL Ex. STR		483+92.545	6579.6989
	TAN TO POC		483+92.607	6579.7135
	PROFILE GR		483+95.619	6580.0124
3/ 10 PT.= : CONSTR. CL -15 0 .0 LEFT SKEW			483+96.347	6579.7349
	WEST OUT		483+89.078	6579.0363
	WEST IN		483+89.401	6579.0690
	CL NEW G1		483+89.593	6579.0793
	CL NEW G2		483+91.151	6579.2362
	CL Ex. GDR		483+92.597	6579.3931
	CL Ex. STR		483+96.347	6579.7349
	TAN TO POC		483+96.501	6579.7486
	PROFILE GR		483+99.412	6580.0882
4/ 10 PT.= : CONSTR. CL -15 0 .0 LEFT SKEW			484+ .148	6579.8510
	WEST OUT		483+92.899	6579.1127
	WEST IN		483+93.221	6579.1454
	CL NEW G1		483+93.321	6579.1555
	CL NEW G2		483+94.865	6579.3124
	CL Ex. GDR		483+96.406	6579.4692
	CL Ex. STR		484+ .148	6579.8510
	TAN TO POC		484+ .213	6579.8578
	PROFILE GR		484+ 3.265	6582.1041
5/ 10 PT.= : CONSTR. CL -15 0 .0 LEFT SKEW			484+ 3.948	6579.9270
	WEST OUT		483+96.719	6579.1891
	WEST IN		483+97.041	6579.2218
	CL NEW G1		483+97.138	6579.2317
	CL NEW G2		483+98.679	6579.3885
	CL Ex. GDR		484+ .216	6579.5453
	CL Ex. STR		484+ 3.948	6579.9270
	TAN TO POC		484+ 4.124	6579.9450
	PROFILE GR		484+ 6.993	6580.2399
6/ 10 PT.= : CONSTR. CL -15 0 .0 LEFT SKEW			484+ 7.748	6580.0930
	WEST OUT		484+ .539	6579.2455
	WEST IN		484+ .862	6579.2782
	CL NEW G1		484+ .956	6579.2880
	CL NEW G2		484+ 2.493	6579.4448
	CL Ex. GDR		484+ 4.028	6579.6215
	CL Ex. STR		484+ 7.748	6580.0930
	TAN TO POC		484+ 7.936	6580.0223
	PROFILE GR		484+10.788	6580.3158
7/ 10 PT.= : CONSTR. CL -15 0 .0 LEFT SKEW			484+11.547	6580.1789
	WEST OUT		484+ 4.258	6579.3419
	WEST IN		484+ 4.674	6579.3746
	CL NEW G1		484+ 4.774	6579.3844
	CL NEW G2		484+ 6.307	6579.5411
	CL Ex. GDR		484+ 7.836	6579.6977
	CL Ex. STR		484+11.547	6580.1789
	TAN TO POC		484+11.748	6580.1996
	PROFILE GR		484+14.579	6580.3916
8/ 10 PT.= : CONSTR. CL -15 0 .0 LEFT SKEW			484+15.346	6580.1549
	WEST OUT		484+ 8.177	6579.4183
	WEST IN		484+ 8.496	6579.4509
	CL NEW G1		484+ 8.592	6579.4608
	CL NEW G2		484+10.120	6579.6174
	CL Ex. GDR		484+11.844	6579.7746
	CL Ex. STR		484+15.346	6580.1549
	TAN TO POC		484+15.559	6580.1776
	PROFILE GR		484+18.369	6580.4474
9/ 10 PT.= : CONSTR. CL -15 0 .0 LEFT SKEW			484+19.144	6580.2309
	WEST OUT		484+11.995	6579.4944
	WEST IN		484+12.313	6579.5273
	CL NEW G1		484+12.416	6579.5372
	CL NEW G2		484+13.934	6579.6938
	CL Ex. GDR		484+15.456	6579.8533
	CL Ex. STR		484+19.144	6580.2309
	TAN TO POC		484+19.371	6580.2544
	PROFILE GR		484+22.158	6580.5432
CL PIER 3	CONSTR. CL -15 0 .0 LEFT SKEW		484+22.948	6580.3068
	WEST OUT		484+15.811	6579.5710
	WEST IN		484+16.128	6579.6036
	CL NEW G1		484+16.227	6579.6137
	CL NEW G2		484+17.747	6579.7702
	CL Ex. GDR		484+19.265	6579.9267
	CL Ex. STR		484+22.948	6580.3068
	TAN TO POC		484+23.301	6580.3442
	PROFILE GR		484+25.946	6580.6189
1/ 10 PT.= : CONSTR. CL -15 0 .0 LEFT SKEW			484+26.227	6580.3687
	WEST OUT		484+18.925	6579.6332
	WEST IN		484+19.241	6579.6658
	CL NEW G1		484+19.342	6579.6762
	CL NEW G2		484+20.859	6579.8327
	CL Ex. GDR		484+22.373	6579.9891
	CL Ex. STR		484+26.027	6580.3687
	TAN TO POC		484+26.412	6580.4074
	PROFILE GR		484+29.037	6580.6827
2/ 10 PT.= : CONSTR. CL -15 0 .0 LEFT SKEW			484+29.134	6580.4337
	WEST OUT		484+22.038	6579.6955
	WEST IN		484+22.353	6579.7281
	CL NEW G1		484+22.457	6579.7380
	CL NEW G2		484+23.971	6579.8952
	CL Ex. GDR		484+25.482	6580.0515
	CL Ex. STR		484+29.134	6580.4337
	TAN TO POC		484+29.519	6580.4737
	PROFILE GR		484+32.127	6580.7425
3/ 10 PT.= : CONSTR. CL -15 0 .0 LEFT SKEW			484+32.231	6580.4926
	WEST OUT		484+25.151	6579.7578
	WEST IN		484+25.465	6579.7903
	CL NEW G1		484+25.572	6579.8014
	CL NEW G2		484+27.083	6579.9577
	CL Ex. GDR		484+28.590	6580.1140
	CL Ex. STR		484+32.231	6580.4926
	TAN TO POC		484+32.628	6580.5344
	PROFILE GR		484+35.216	6580.8043
4/ 10 PT.= : CONSTR. CL -15 0 .0 LEFT SKEW			484+35.327	6580.5545
	WEST OUT		484+28.263	6579.8238
	WEST IN		484+28.577	6579.8525
	CL NEW G1		484+28.687	6579.8640
	CL NEW G2		484+30.195	6580.0283
	CL Ex GDR		484+31.699	6580.1786
	CL Ex. STR		484+35.327	6580.5545
	TAN TO POC		484+35.336	6580.5573
	PROFILE GR		484+38.365	6580.8661
5/ 10 PT.= : CONSTR. CL -15 0 .0 LEFT SKEW			484+38.422	6580.6164
	WEST OUT		484+31.375	6579.8822
	WEST IN		484+31.688	6579.9148
	CL NEW G1		484+31.802	6579.9266
	CL NEW G2		484+33.367	6580.0829
	CL Ex GDR		484+34.807	6580.2391
	CL Ex. STR		484+38.422	6580.6164
	TAN TO POC		484+38.445	6580.6687
	PROFILE GR		484+41.394	6580.9279
6/ 10 PT.= : CONSTR. CL -15 0 .0 LEFT SKEW			484+41.517	6580.6783
	WEST OUT		484+34.486	6579.9415
	WEST IN		484+34.799	6579.9778
	CL NEW G1		484+34.918	6579.9893
	CL NEW G2		484+36.418	6580.1455
	CL Ex GDR		484+37.916	6580.3017
	CL Ex. STR		484+41.517	6580.6783
	TAN TO POC		484+41.954	6580.7241
	PROFILE GR		484+44.482	6580.9896
7/ 10 PT.= : CONSTR. CL -15 0 .0 LEFT SKEW			484+44.612	6580.7462
	WEST OUT		484+37.597	6580.0067
	WEST IN		484+37.909	6580.0392
	CL NEW G1		484+38.033	6580.0520
	CL NEW G2		484+39.538	6580.2082
	CL Ex GDR		484+41.024	6580.3643
	CL Ex. STR		484+44.612	6580.7462
	TAN TO POC		484+45.063	6580.7874
	PROFILE GR		484+47.573	6581.0514
8/ 10 PT.= : CONSTR. CL -15 0 .0 LEFT SKEW			484+47.726	6580.8221
	WEST OUT		484+40.738	6580.0689
	WEST IN		484+41.019	6580.1014
	CL NEW G1		484+41.148	6580.1148
	CL NEW G2		484+42.642	6580.2709
	CL Ex GDR		484+44.133	6580.4278
	CL Ex. STR		484+47.726	6580.8221
	TAN TO POC		484+48.171	6580.8710
	PROFILE GR		484+50.658	6581.1132
9/ 10 PT.= : CONSTR. CL -15 0 .0 LEFT SKEW			484+50.800	6580.8640
	WEST OUT		484+43.818	6580.1311
	WEST IN		484+44.129	6580.1636
	CL NEW G1		484+44.263	6580.1776
	CL NEW G2		484+45.754	6580.3337
	CL Ex GDR		484+47.241	6580.4897
	CL Ex. STR		484+50.800	6580.8640
	TAN TO POC		484+51.288	6580.9145
	PROFILE GR		484+53.745	6581.1749
CL BRG ABUT 4 : CONSTR. CL -15 0 .0 LEFT SKEW			484+53.894	6580.9259
	WEST OUT		484+46.928	6580.1931
	WEST IN		484+47.238	6580.2256
	CL NEW G1		484+47.374	6580.2404
	CL NEW G2		484+48.865	6580.3964
	CL Ex GDR		484+50.356	6580.5524
	CL Ex. STR		484+53.894	6580.9259
	TAN TO POC		484+54.388	6580.9781
	PROFILE GR		484+56.832	6581.2366
BF ABUT 4 : CONSTR. CL -15 0 .0 LEFT SKEW			484+55.781	6581.9636
	WEST OUT		484+48.825	6580.2313
	WEST IN		484+49.135	6580.2637
	CL NEW G1		484+49.274	6580.2788
	CL NEW G2		484+50.764	6580.4348
	CL Ex GDR		484+52.246	6580.5907
	CL Ex. STR		484+55.781	6580.9636
	TAN TO POC		484+56.285	6581.0165
	PROFILE GR		484+58.715	6581.2743
END WING A8 : CONSTR. CL -15 0 .0 LEFT SKEW			484+57.940	6581.2068
	WEST OUT		484+51.048	6580.4757
	WEST IN		484+51.354	6580.5081
	CL NEW G1		484+51.528	6580.5262
	CL NEW G2		484+52.998	6580.6826
	CL Ex GDR		484+54.468	6580.8378
	CL Ex. STR		484+57.940	6581.2068
	TAN TO POC		484+58.566	6581.2671
	PROFILE GR		484+78.647	6581.5169

DESIGNED BY
CHECKED BY
DRAWN BY
CHECKED BY
SUBMITTED BY
DATE
REVISIONS

DIVISION OF HIG

ELEVATIONS
H-17-L SOUTHBO

Designer	D. Peterson	Structure Numbers	
Detailer	B. Walton		
Drawing Number B 5 of			

AS CONSTRUCTED
DATE 3/23/76

FEDERAL ROAD REGION NO.	DISTRICT	PROJ. NO.	SHEET NO.	TOTAL SHEETS
VIII	COLORADO	I 25-2(113)	47	

REVISIONS

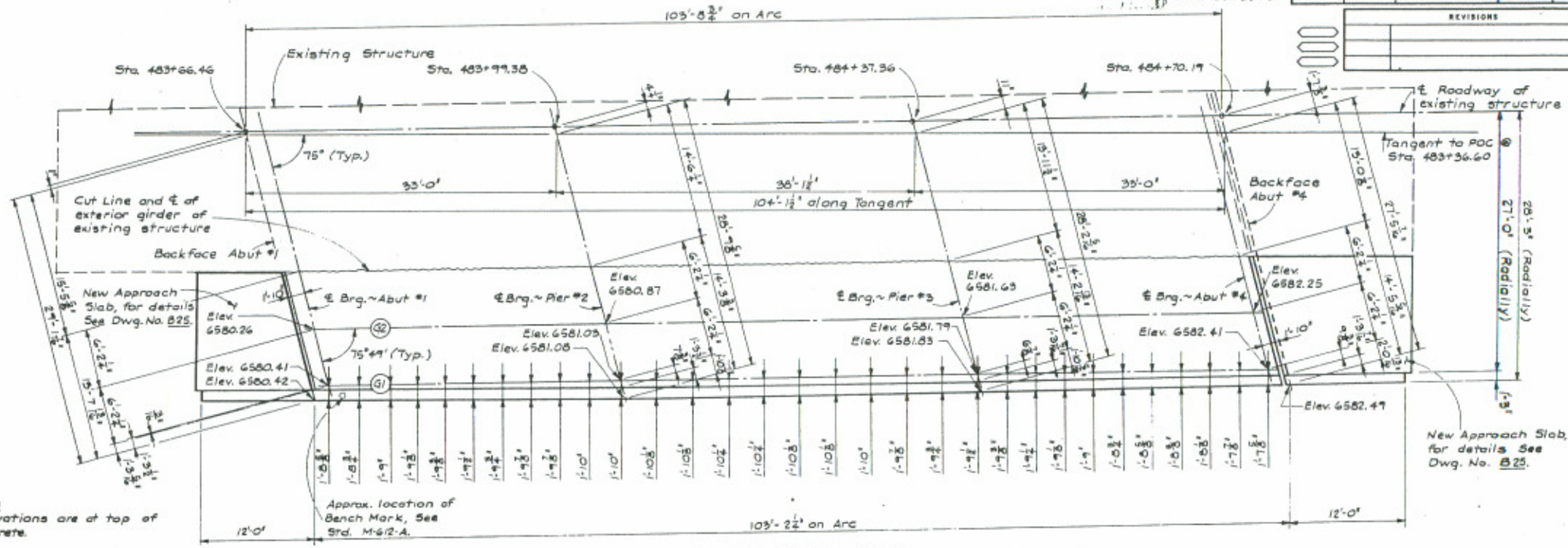

Note:
1. Elevations are at top of concrete.

2. Adjust elevations to match existing structure.

3. Abutments & Piers are parallel.

4. Curb offsets are spaced at 10th points along ℄ of Girder.

CONSTRUCTION LAYOUT

H-17-J NORTHBOUND

Bridge Rail Type 3. See Dwg. 824 for details.

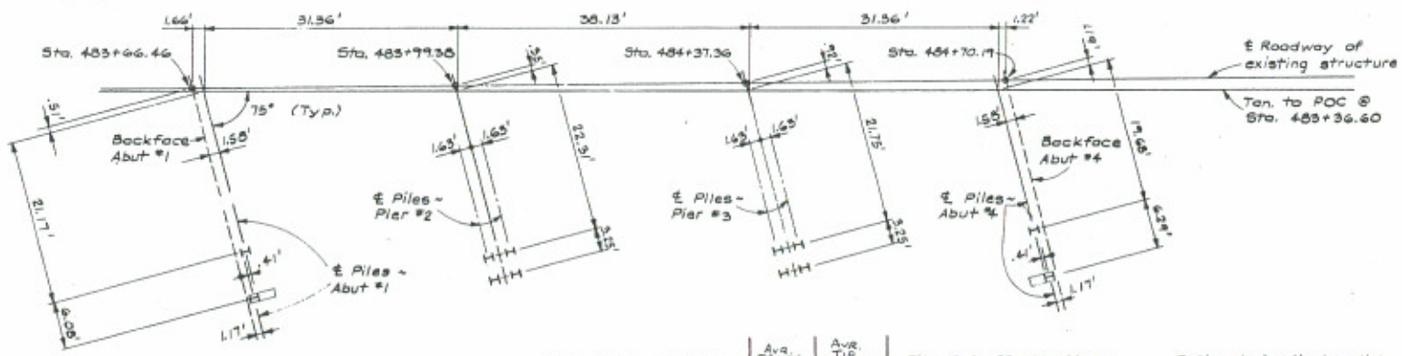

PILING LAYOUT

H-17-J NORTHBOUND

Avg. Driven Length	Avg. Tip Elevation	Pile Cut-off elevations:		Estimated pile length:
3.'	42.8'	Abutment No. 1	- 6576.0	38.00'
17.9'	38.5'	Pier No. 2	- 6556.4	16.00'
15.6'	41.5'	Pier No. 3	- 6557.1	17.00'
20.6'	36.7'	Abutment No. 4	- 6577.5	15.00'

Note:
1. All dimensions are at bottom of concrete.

2. All piling shall be HP10 x 42. All piles are end bearing.
Abutment - Max. Pile Load = 21.7 tons.
Pier - Max. Pile Load = 18.3 tons.

3. The backfaces of Abutments 1 & 4 shall be aligned with the existing backfaces.

4. Piles in Abutments 1 & 4 shall be battered 2:12 shown thus

DIVISION OF HIGHWAYS			
CONSTRUCTION LAYOUT PILING LAYOUT H-17-J NORTHBOUND			
Designer	D. Peterson	Structure Numbers	H-17-J Northbound H-17-L Southbound
Detailer	B. Walton		
Drawing Number 8	6	of 26	Drawings

Revision Dates (Preliminary Stage Only)

FEDERAL AID PROJECT NO.	DISTRICT	PROJ. NO.	SHEET NO.	TOTAL SHEETS
XIII	COLORADO	I 25-2(113)	48	

REVISIONS
AS CONSTRUCTED
REVISED DATE 5/23/76

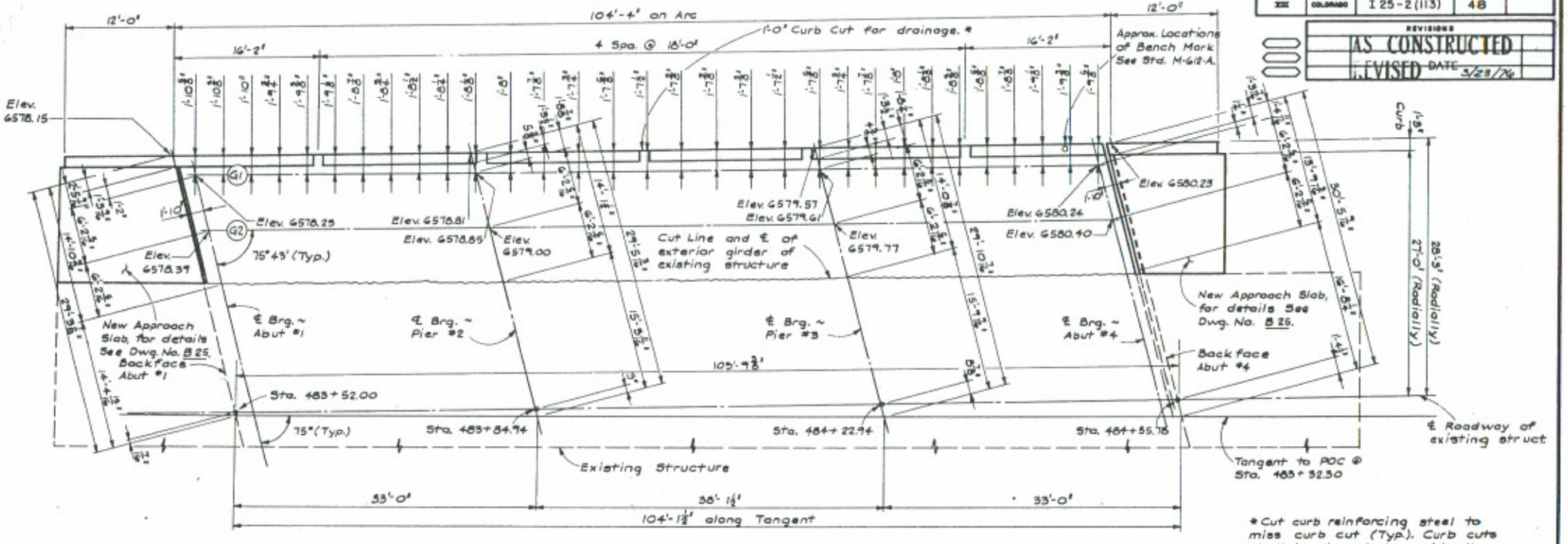

* Cut curb reinforcing steel to miss curb cut (Typ.). Curb cuts shall be placed to avoid all bridge rail posts.

CONSTRUCTION LAYOUT
H-17-L SOUTHBOUND

Bridge Rail Type 3. See Dwg. No. B24 for details.

For Notes See Dwg. No. B6.

	Average Driven Len.	Average Tip Elevation
Abut. 1	29.3'	45.1'
Pier 2	10.8'	41.8'
Pier 3	15.2'	38.1'
Abut. 4	16.4'	59.1'

Pile cut-off elevations:
Abutment No. 1 - 6574.4
Pier No. 2 - 6552.6
Pier No. 3 - 6553.3
Abutment No. 4 - 6575.5

Estimated pile length:
30.00'
13.00'
11.00'
12.00'

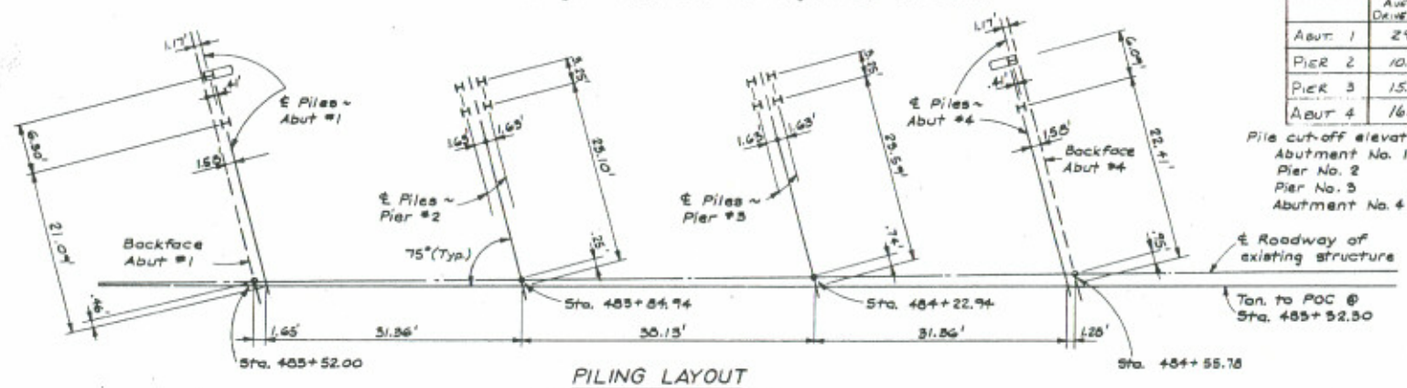

PILING LAYOUT
H-17-L SOUTHBOUND

DIVISION OF HIGHWAYS

CONSTRUCTION LAYOUT
PILING LAYOUT
H-17-L SOUTHBOUND

Designer	D. Peterson	Structure Numbers	H-17-J Northbound
Detailer	B. Walton		H-17-L Southbound
Drawing Number B 7 of 26 Drawings			

FEDERAL ROAD REGION NO.	DISTRICT	PROJ. NO.	SHEET NO.	TOTAL SHEETS
2111	COLORADO	I 25-2(113)	49	

REVISIONS

AS CONSTRUCTED

3/28/76

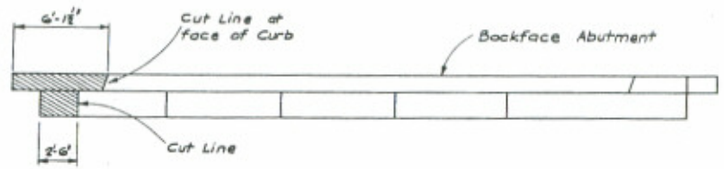

PLAN - EXISTING ABUTMENT NO. 1
H-17-J NORTHBOUND

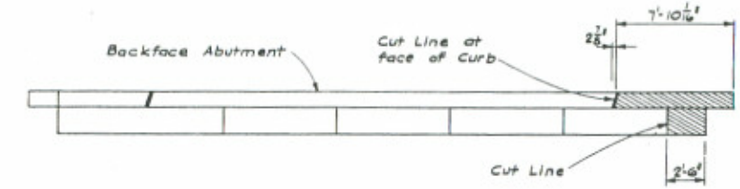

PLAN - EXISTING ABUTMENT NO. 4
H-17-J NORTHBOUND

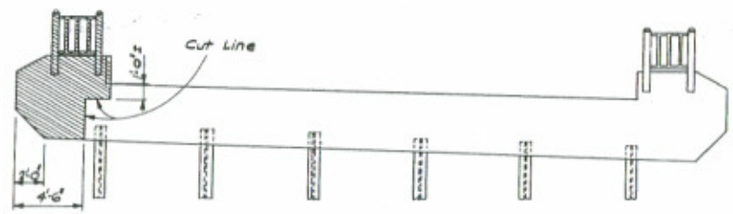

ELEVATION - EXISTING ABUTMENT NO. 1
H-17-J NORTHBOUND

Clean and straighten existing reinforcing steel exposed by cutting concrete. Lap approx. 2'-0".

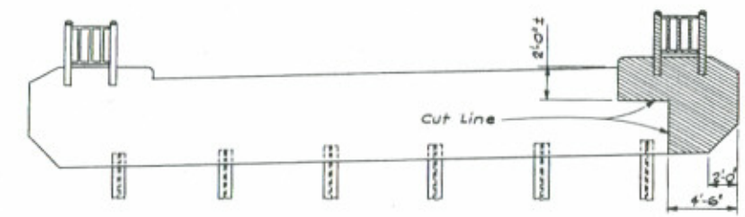

ELEVATION - EXISTING ABUTMENT NO. 4
H-17-J NORTHBOUND

Clean and straighten existing reinforcing steel exposed by cutting concrete. Lap approx. 2'-0".

DIVISION OF HIGHWAYS

ABUTMENT DETAILS
H-17-J NORTHBOUND

Designer	D. Peterson	Structure Numbers	H-17-J Northbound
Detailer	B. Walton		H-17-L Southbound
Drawing Number 8 8		of 26	Drawings

FEDERAL ROAD REGION NO.	DISTRICT	PROJ. NO.	SHEET NO.	TOTAL SHEETS
XIII	COLORADO	I 25-2(113)	50	

REVISIONS
AS CONSTRUCTED
NO REVISIONS DATE

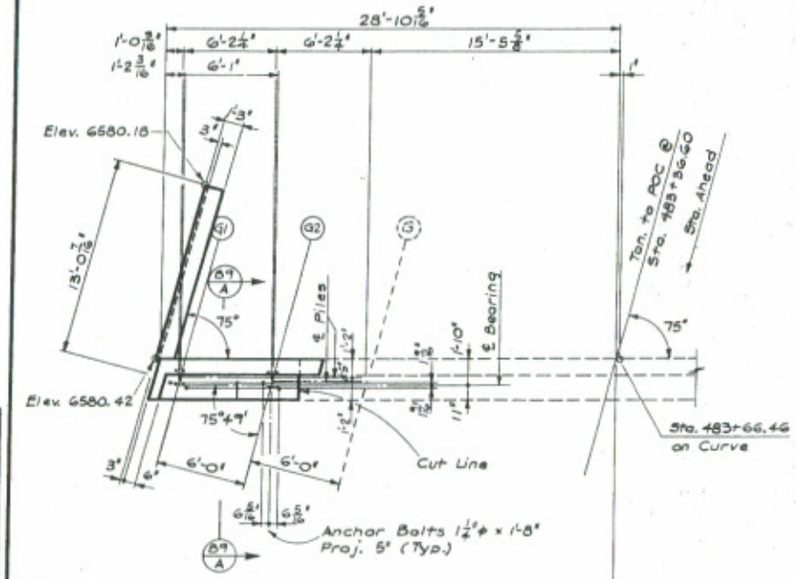

PLAN — ABUTMENT NO. 1
H-17-J NORTHBOUND

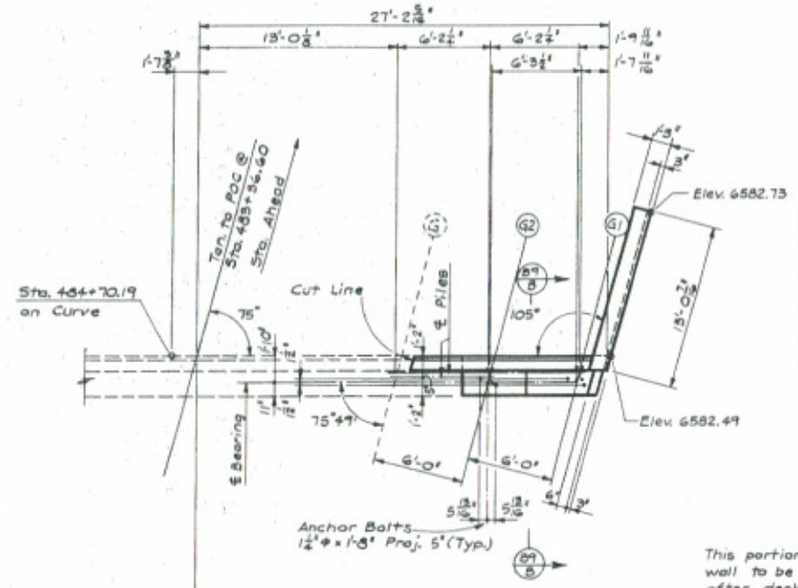

PLAN — ABUTMENT NO. 4
H-17-J NORTHBOUND

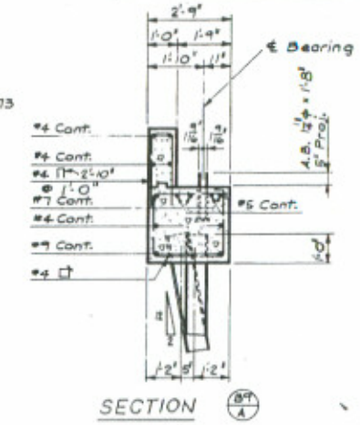

SECTION (B9/A)

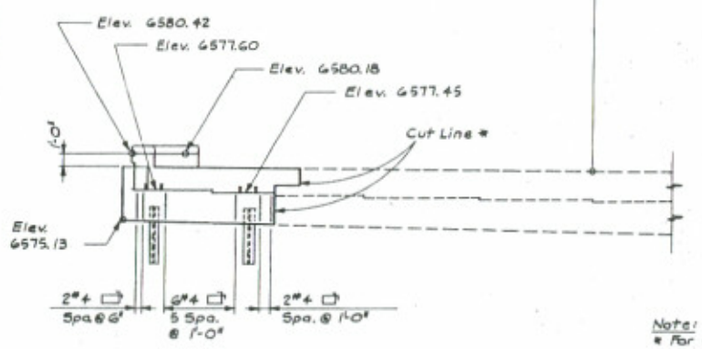

ELEVATION — ABUTMENT NO. 1
H-17-J NORTHBOUND

Note:
* For Cut Line Locations See Dwg. No. B8.

Coat all cut line surfaces with Epoxy bonding material. Epoxy shall be included in the Bid Price for Item 601 Concrete, Class A (Bridge).

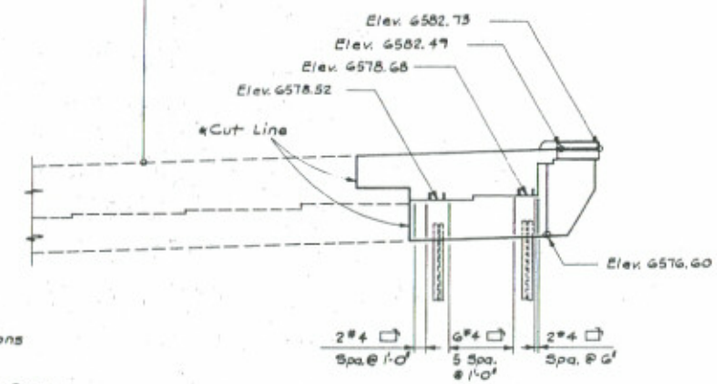

ELEVATION — ABUTMENT NO. 4
H-17-J NORTHBOUND

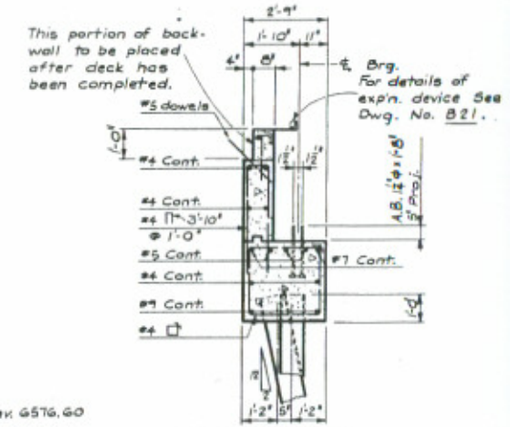

SECTION (B9/B)

DIVISION OF HIGHWAYS

ABUTMENT DETAILS
H-17-J NORTHBOUND

Designer D. Peterson		Structure Numbers	H-17-J Northbound H-17-L Southbound
Detailer B. Walton			
Drawing Number B 9	of 26	Drawings	

FEDERAL ROAD REGION NO.	DISTRICT	PROJ. NO.	SHEET NO.	TOTAL SHEETS
VIII	COLORADO	I 25-2(113)	51	

REVISIONS		

AS CONSTRUCTED
N[illegible] REVISIONS DATE 3/23/76

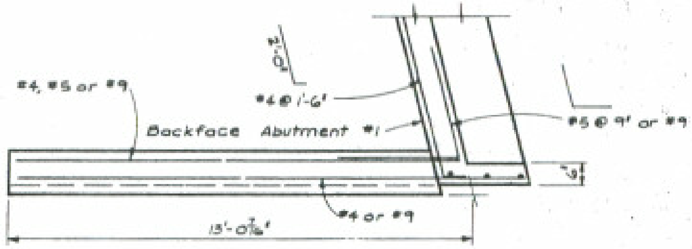

PLAN — WINGWALL @ ABUTMENT NO. 1
H-17-J NORTHBOUND

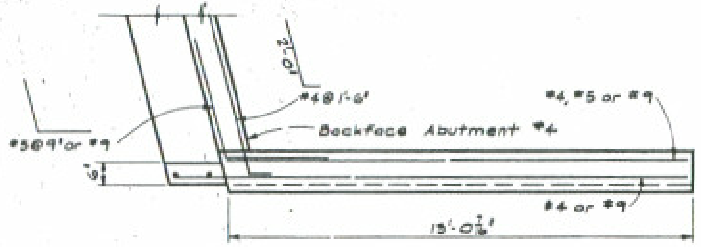

PLAN — WINGWALL @ ABUTMENT NO. 4
H-17-J NORTHBOUND

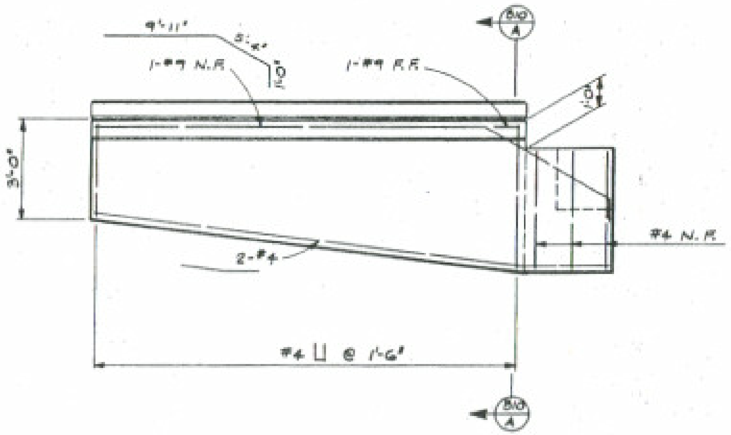

ELEVATION — WINGWALL @ ABUTMENT NO. 1
H-17-J NORTHBOUND

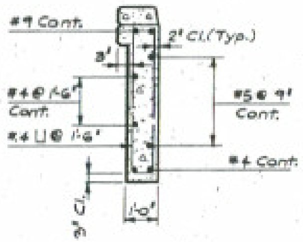

SECTION B10/A

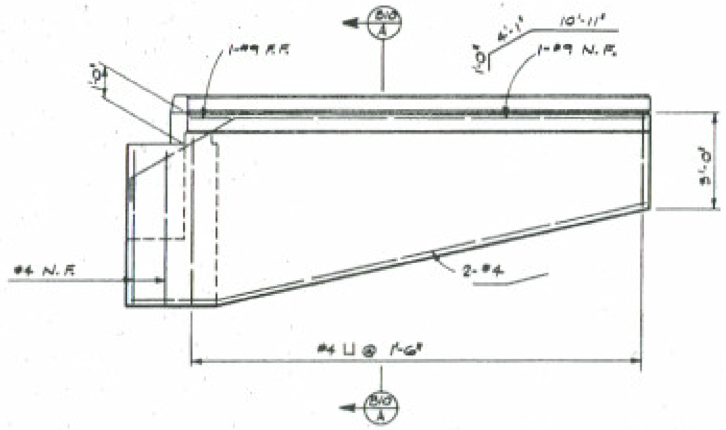

ELEVATION — WINGWALL @ ABUTMENT NO. 4
H-17-J NORTHBOUND

Note:
For Curb dowels and reinforcing, See Dwg. No. B24.

DIVISION OF HIGHWAYS

ABUTMENT DETAILS
H-17-J NORTHBOUND

Designer	D. Peterson	Structure Numbers	H-17-J Northbound
Detailer	B. Walton		H-17-L Southbound

Drawing Number B 10 of 26 Drawings

FEDERAL ROAD DESIGN NO.	DISTRICT	PROJ. NO.	SHEET NO.	TOTAL SHEETS
XIII	COLORADO	I 25-2(113)	52	

REVISIONS

AS CONSTRUCTED
NO REVISIONS DATE 3/23/76

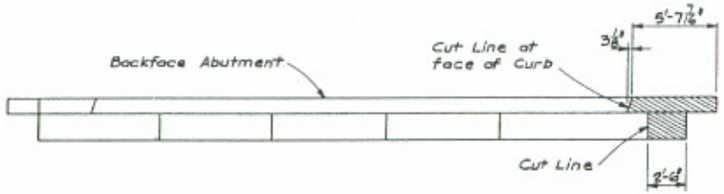

PLAN - EXISTING ABUTMENT NO. 1
H-17-L SOUTHBOUND

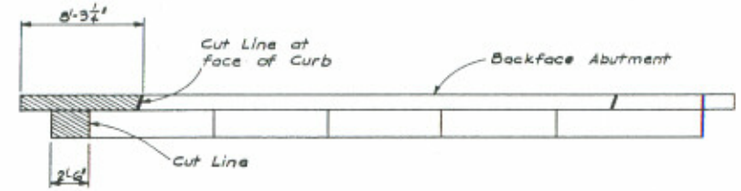

PLAN - EXISTING ABUTMENT NO. 4
H-17-L SOUTHBOUND

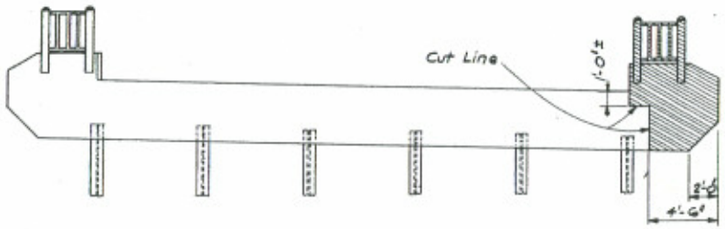

ELEVATION - EXISTING ABUTMENT NO. 1
H-17-L SOUTHBOUND

Clean and straighten existing reinforcing steel exposed by cutting concrete. Lap approx. 2'-0".

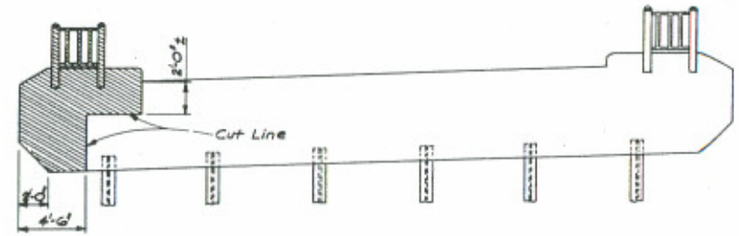

ELEVATION - EXISTING ABUTMENT NO. 4
H-17-L SOUTHBOUND

Clean and straighten existing reinforcing steel exposed by cutting steel. Lap approx. 2'-0".

DIVISION OF HIGHWAYS

ABUTMENT DETAILS
H-17-L SOUTHBOUND

Designer	D. Peterson	Structure Numbers	H-17-J Northbound
Detailer	B. Walton		H-17-L Southbound
Drawing Number B	11	of	26 Drawings

FEDERAL ROAD REGION NO.	DISTRICT	PROJ. NO.	SHEET NO.	TOTAL SHEETS
VIII	COLORADO	I 25-2(113)	53	

REVISIONS

AS CONSTRUCTED
NO REVISIONS on 3/23/76

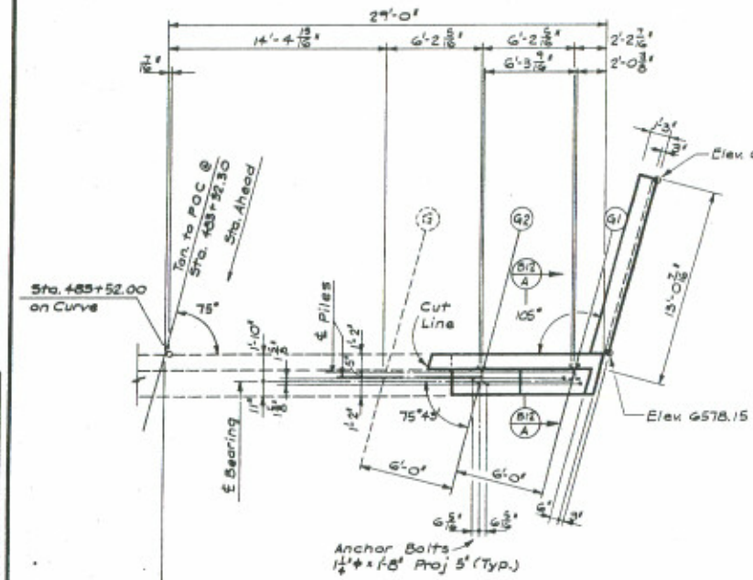

PLAN – ABUTMENT NO. 1
H-17-L SOUTHBOUND

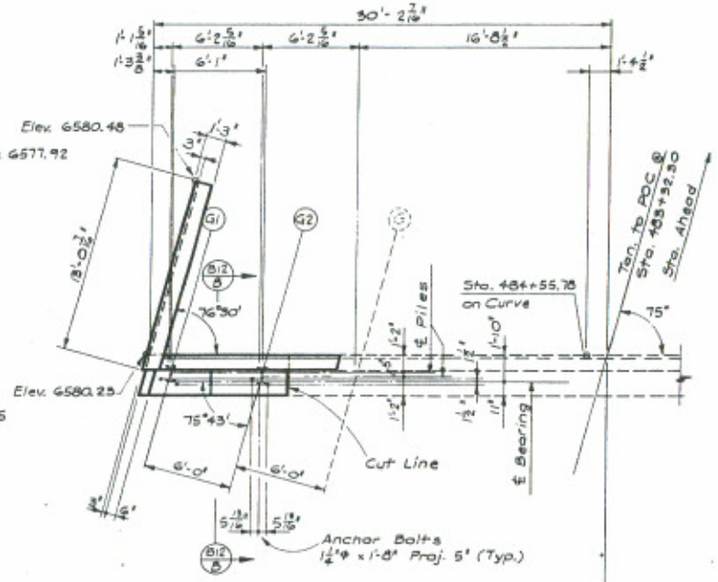

PLAN – ABUTMENT NO. 4
H-17-L SOUTHBOUND

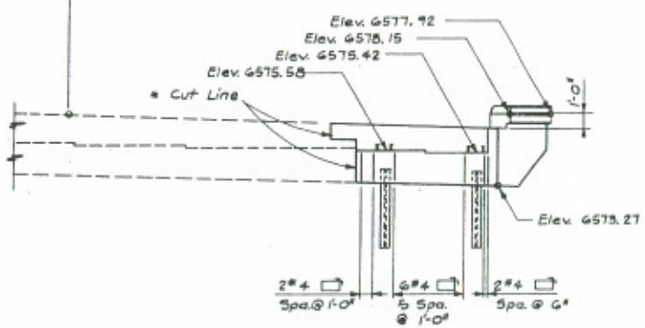

ELEVATION – ABUTMENT NO. 1
H-17-L SOUTHBOUND

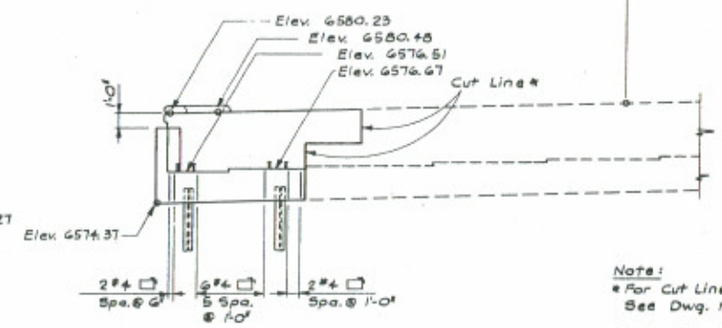

ELEVATION – ABUTMENT NO. 4
H-17-L SOUTHBOUND

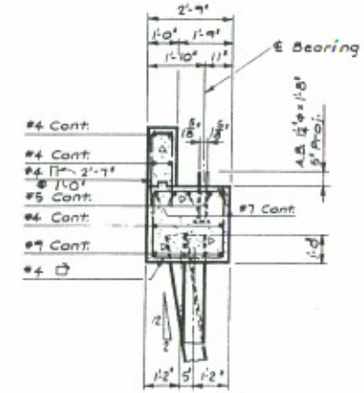

SECTION B12/A

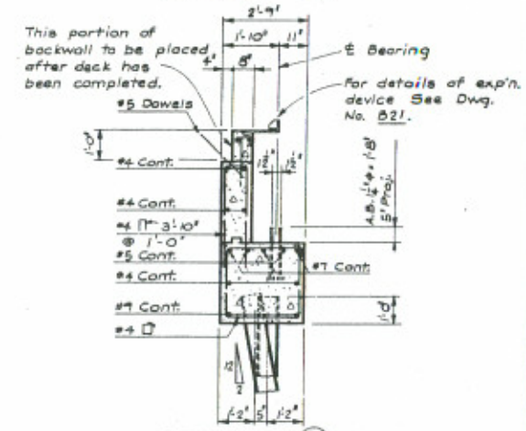

SECTION B12/B

Note:
* For Cut Line Locations See Dwg. No. B11.

Coat all cut line surfaces with Epoxy bonding material. Epoxy shall be included in the Bid Price for Item 601 Concrete, Class A (Bridge).

DIVISION OF HIGHWAYS

ABUTMENT DETAILS
H-17-L SOUTHBOUND

Designer D. Peterson		Structure Numbers	H-17-J Northbound
Detailer B. Walton			H-17-L Southbound
Drawing Number B 12	of 26	Drawings	

FEDERAL ROAD REGION NO.	DISTRICT	PROJ. NO.	SHEET NO.	TOTAL SHEETS
VIII	COLORADO	I 25-2(113)	54	

REVISIONS

AS CONSTRUCTED
NO REVISIONS DATE 3/23/76

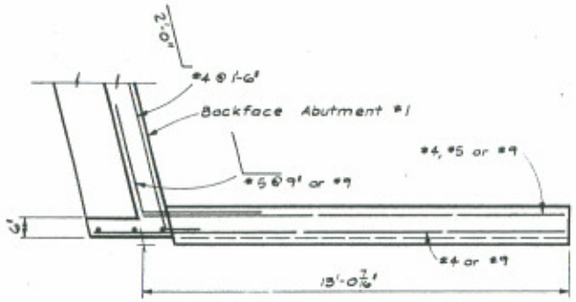

PLAN — WINGWALL @ ABUTMENT NO. 1
H-17-L SOUTHBOUND

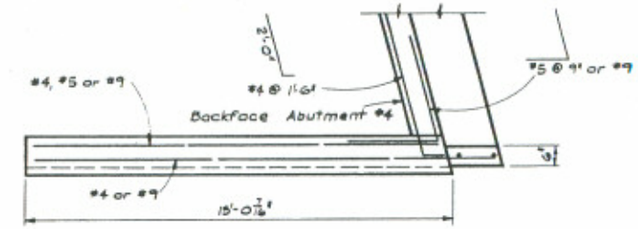

PLAN — WINGWALL @ ABUTMENT NO. 4
H-17-L SOUTHBOUND

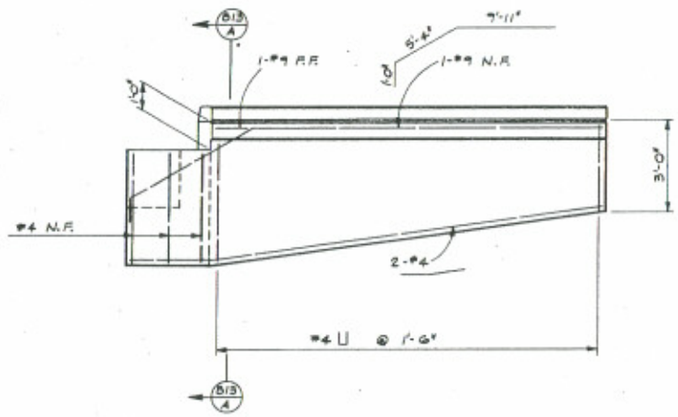

ELEVATION — WINGWALL @ ABUT NO. 1
H-17-L SOUTHBOUND

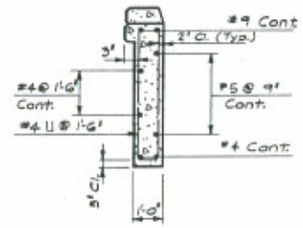

SECTION B13/A

Note:
For curb dowels and reinforcing, See Dwg. No. B24.

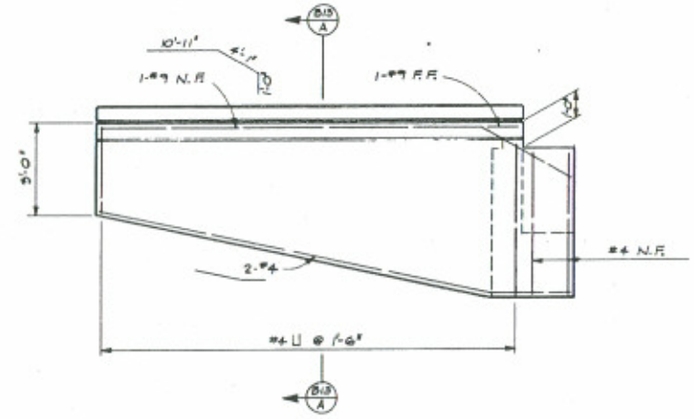

ELEVATION — WINGWALL @ ABUTMENT NO. 4
H-17-L SOUTHBOUND

DIVISION OF HIGHWAYS

ABUTMENT DETAILS
H-17-L SOUTHBOUND

Designer D. Peterson		Structure Numbers	H-17-J Northbound
Detailer B. Walton			H-17-L Southbound
Drawing Number B 13	of 26	Drawings	

FEDERAL ROAD REGION NO.	DISTRICT	PROJ. NO.	SHEET NO.	TOTAL SHEETS
VIII	COLORADO	I 25 - 2(113)	55	

REVISIONS

AS CONSTRUCTED
NO REVISIONS DATE 3/23/76

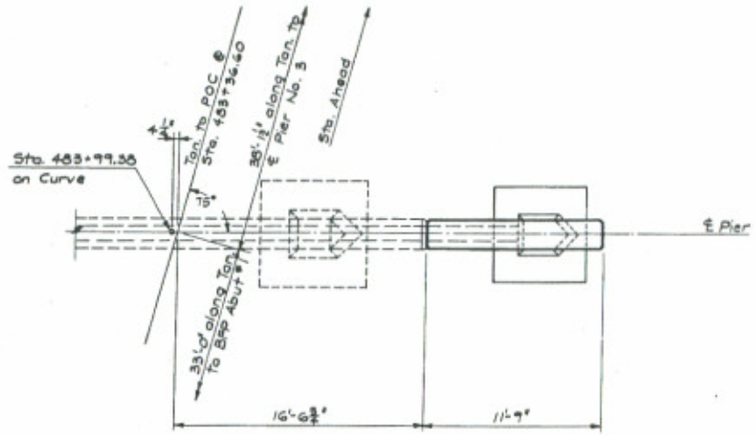

PLAN – PIER NO. 2
(H-17-J Northbound)

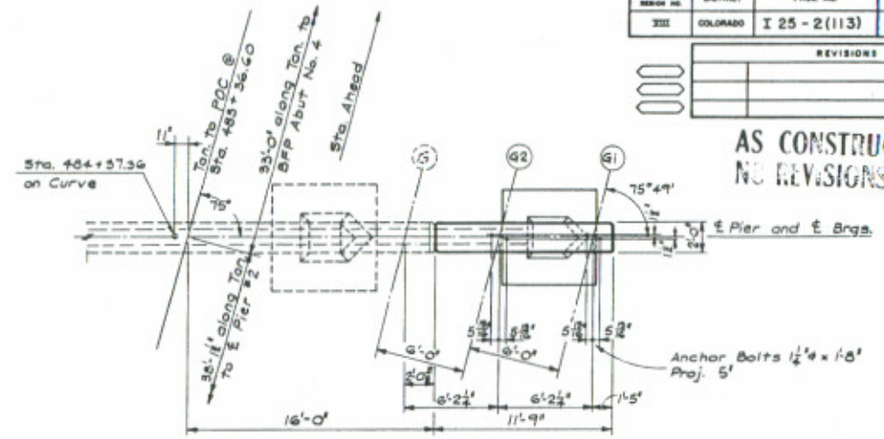

PLAN – PIER NO. 3
(H-17-J Northbound)

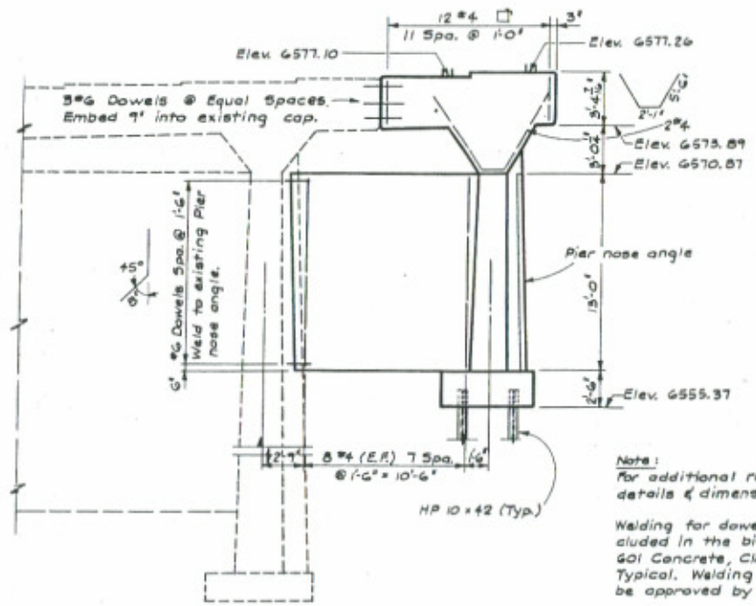

ELEVATION – PIER NO. 2
(H-17-J Northbound)
For Dimensions see Pier No. 3.

Note:
For additional reinforcing steel details & dimensions, See Dwg. No. B16

Welding for dowels shall be included in the bid price for Item 601 Concrete, Class 'A' (Bridge) Typical. Welding procedure shall be approved by the Engineer.

See Dwg. No. B25 for Pier nose angle details.

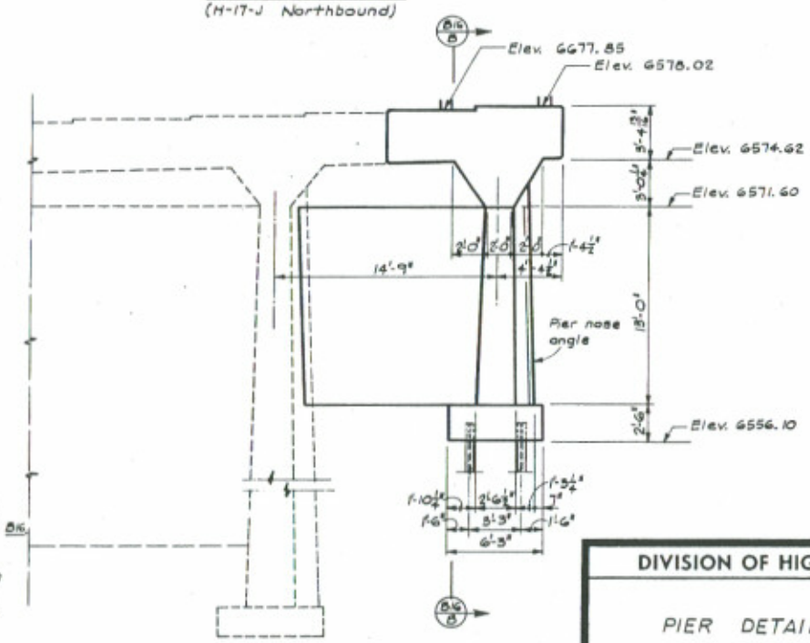

ELEVATION – PIER NO. 3
(H-17-J Northbound)
For Reinforcing see Pier No. 2.

DIVISION OF HIGHWAYS

PIER DETAILS
H-17-J NORTHBOUND

Designer	D. Peterson	Structure Numbers	H-17-J Northbound
Detailer	B. Walton		H-17-L Southbound
Drawing Number B 14 of 26 Drawings			

FEDERAL ROAD REGION NO.	DISTRICT	PROJ. NO.	SHEET NO.	TOTAL SHEETS
VIII	COLORADO	I 25 - 2 (113)	56	

REVISIONS

AS CONSTRUCTED REVISIONS DATE 3/23/76

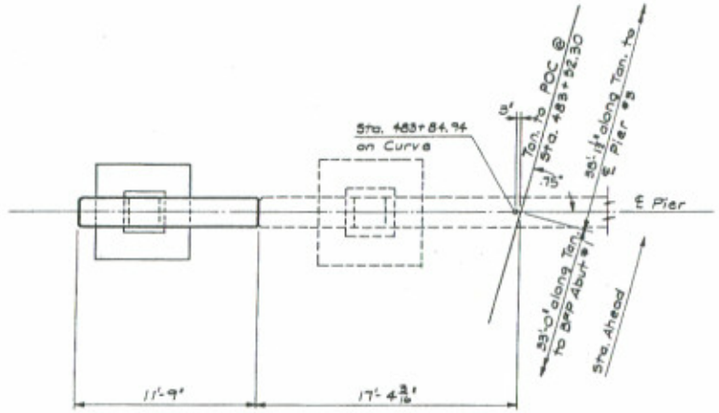

PLAN – PIER NO. 2
(H-17-L Southbound)

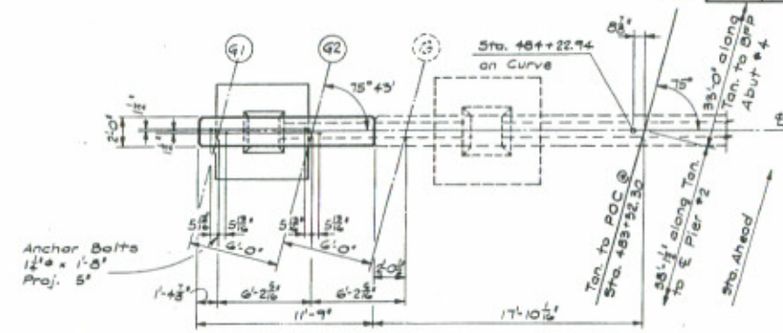

PLAN – PIER NO. 3
(H-17-L Southbound)

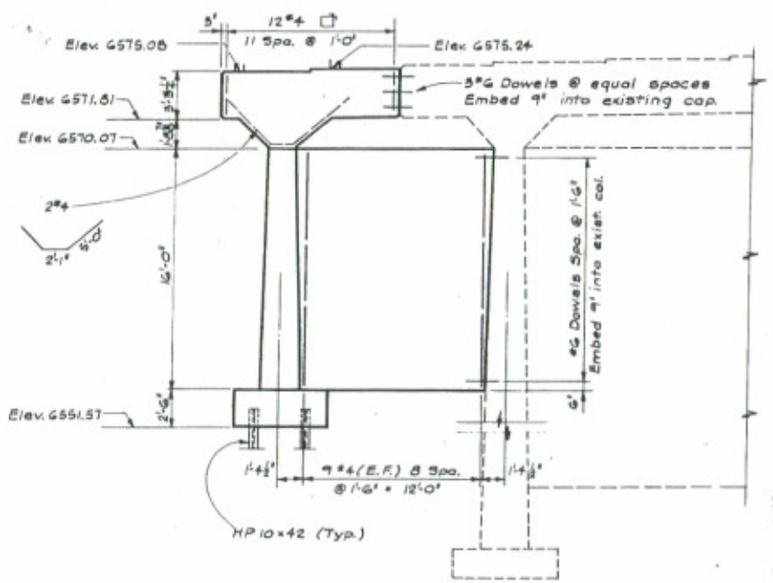

ELEVATION – PIER NO. 2
(H-17-L Southbound)
For Dimensions see Pier No. 3.

Note:
For additional reinforcing steel details & dimensions, See Dwg. No. B16.

Drilling and grouting for dowels shall be included in the bid price for Item 601 Concrete, Class 'A' (Bridge) Typical.

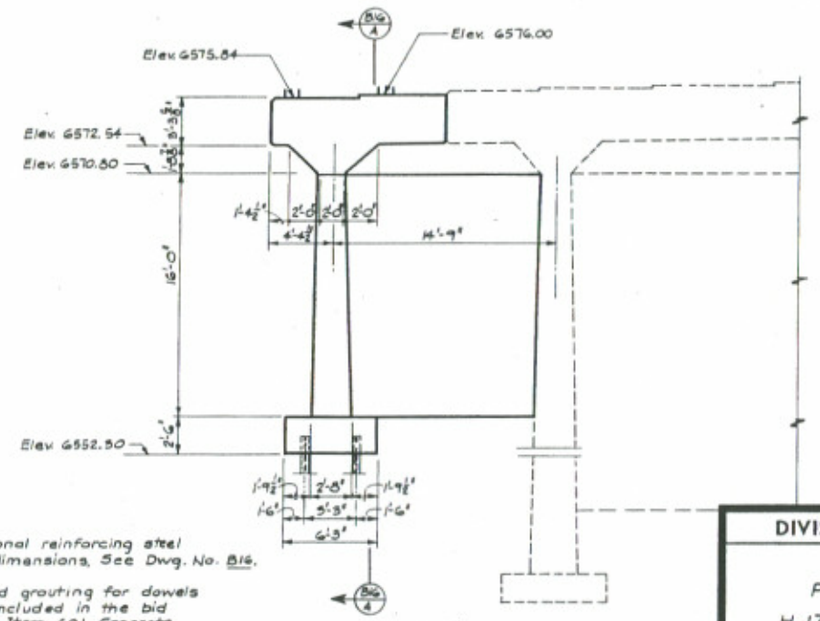

ELEVATION – PIER NO. 3
(H-17-L Southbound)
For Reinforcing see Pier No. 2.

DIVISION OF HIGHWAYS

PIER DETAILS
H-17-L SOUTHBOUND

Designer D. Peterson		Structure Numbers	H-17-J Northbound
Detailer B. Walton			H-17-L Southbound
Drawing Number B 15	of 26	Drawings	

FEDERAL ROAD REGION NO.	DISTRICT	PROJ. NO.	SHEET NO.	TOTAL SHEETS
XIII	COLORADO	I 25-2(113)	57	

REVISIONS

AS CONSTRUCTED
NO REVISIONS DATE 3/23/76

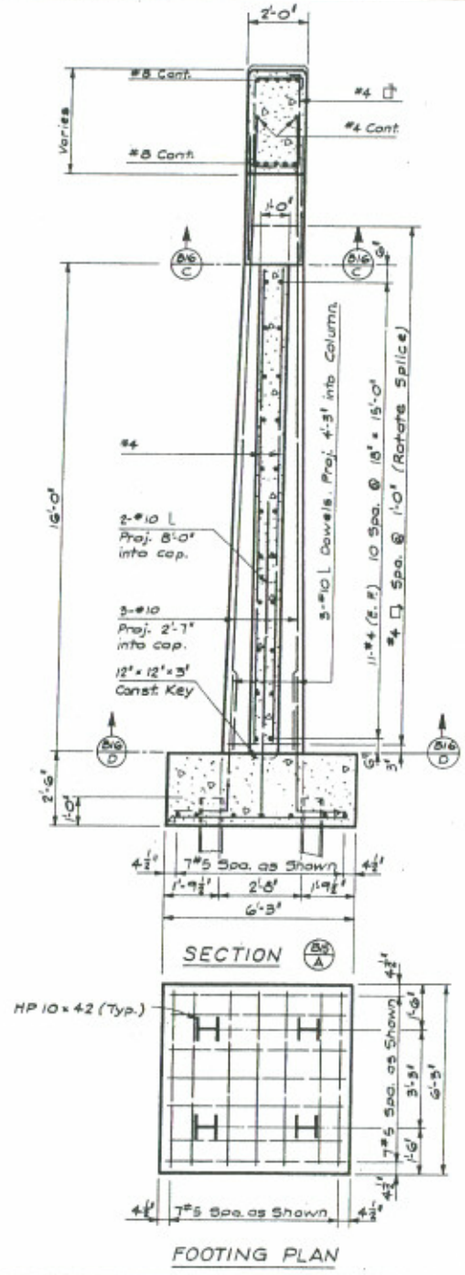

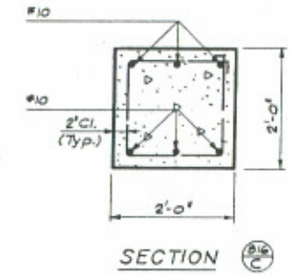

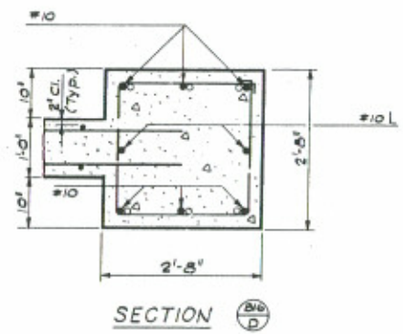

H-17-L SOUTHBOUND

Note:
For additional reinforcing steel details see Dwg. No. B15.

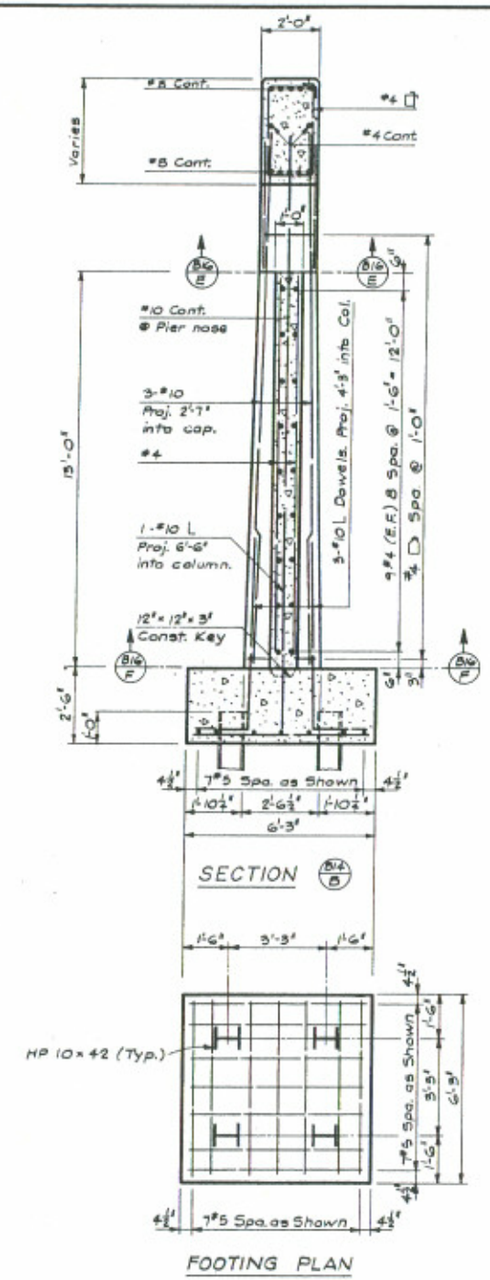

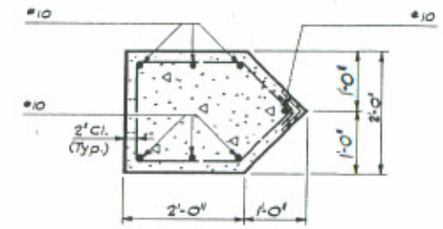

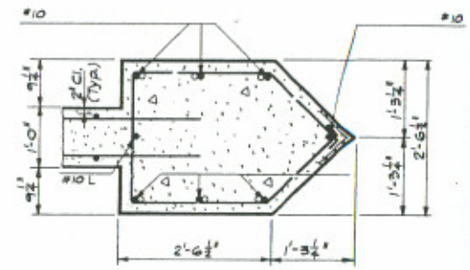

H-17-J NORTHBOUND

Note:
For additional reinforcing steel details See Dwg. No. B14.

DIVISION OF HIGHWAYS

PIER DETAILS
H-17-J NORTHBOUND
H-17-L SOUTHBOUND

Designer D. Peterson		Structure Numbers	H-17-J Northbound H-17-L Southbound
Detailer B. Walton			
Drawing Number B 16	of 26	Drawings	

AS CONSTRUCTED
NO REVISIONS DATE 3/23/76

FEDERAL ROAD REGION NO.	DISTRICT	PROJ. NO.	SHEET NO.	TOTAL SHEETS
XIII	COLORADO	I 25-2(113)	58	

REVISIONS

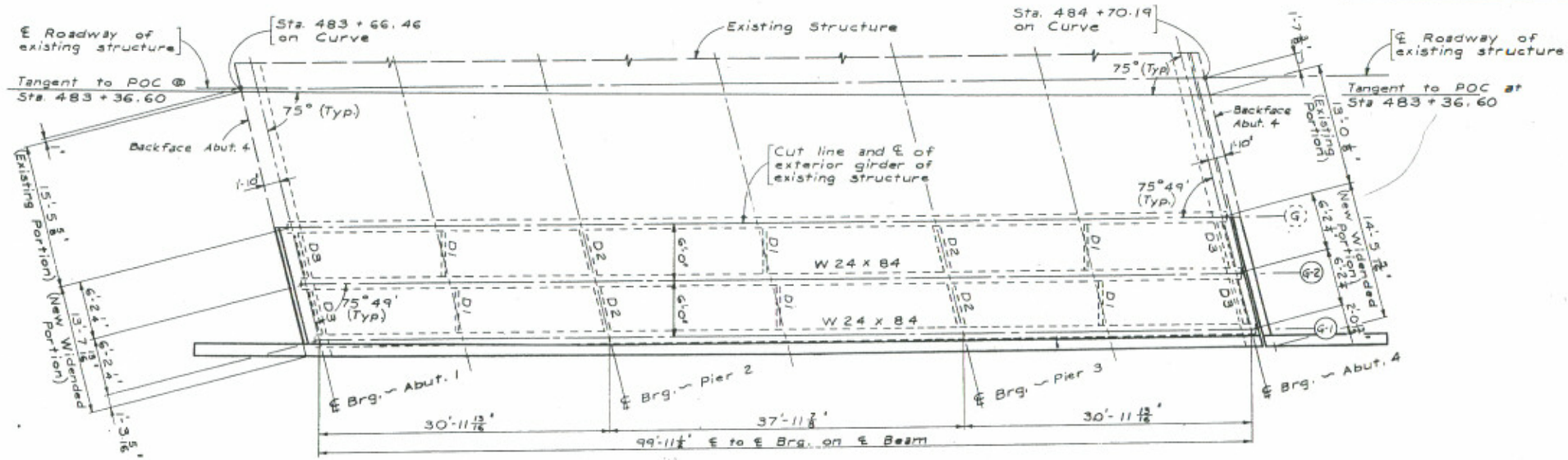

PLAN
H-17-J NORTHBOUND

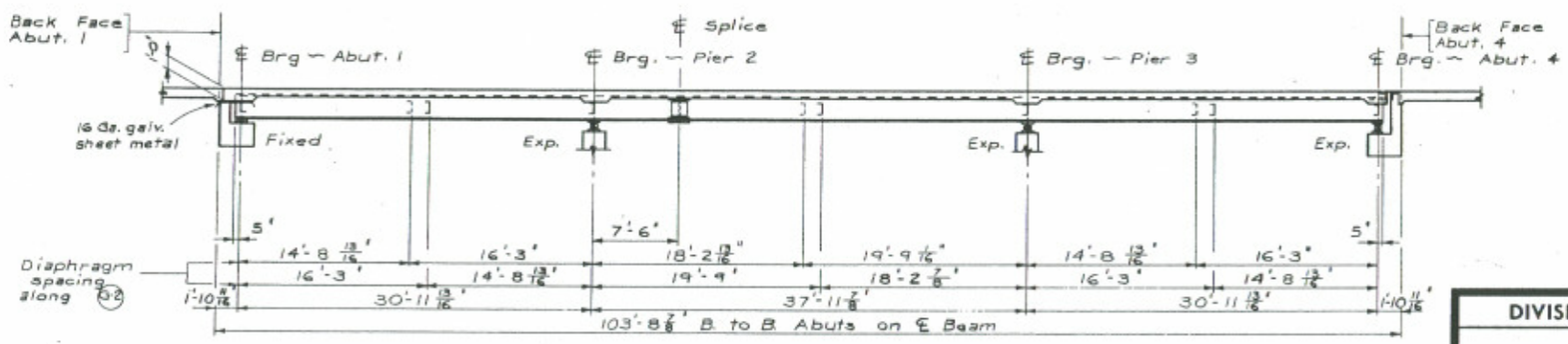

SECTION ALONG ℄ OF BEAM
H-17-J NORTHBOUND

DIVISION OF HIGHWAYS

SUPERSTRUCTURE DETAILS
H-17-J NORTHBOUND

Designer D. Peterson		Structure Numbers	H-17-J Northbound
Detailer K. Sharpley			H-17-L Southbound
Drawing Number 8	17 of 26	Drawings	

FEDERAL ROAD REGION NO.	DISTRICT	PROJ. NO.	SHEET NO.	TOTAL SHEETS
VIII	COLORADO	I 25-2(113)	59	

REVISIONS		

AS CONSTRUCTED
REVISED DATE 3/23/76

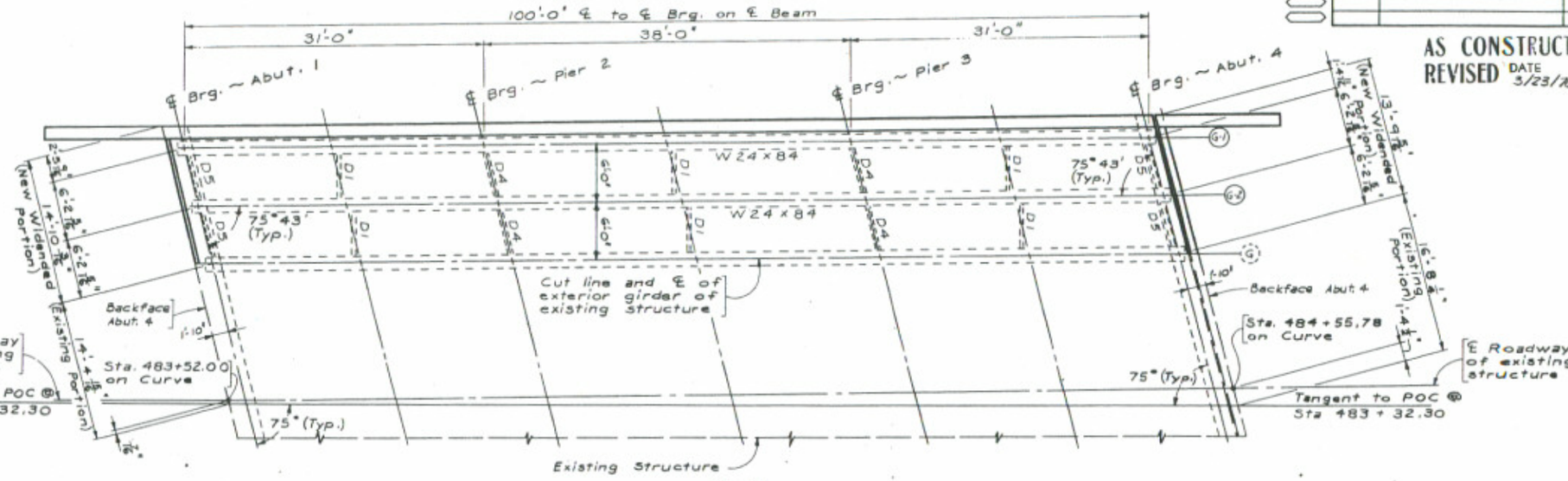

PLAN
H-17-L SOUTHBOUND

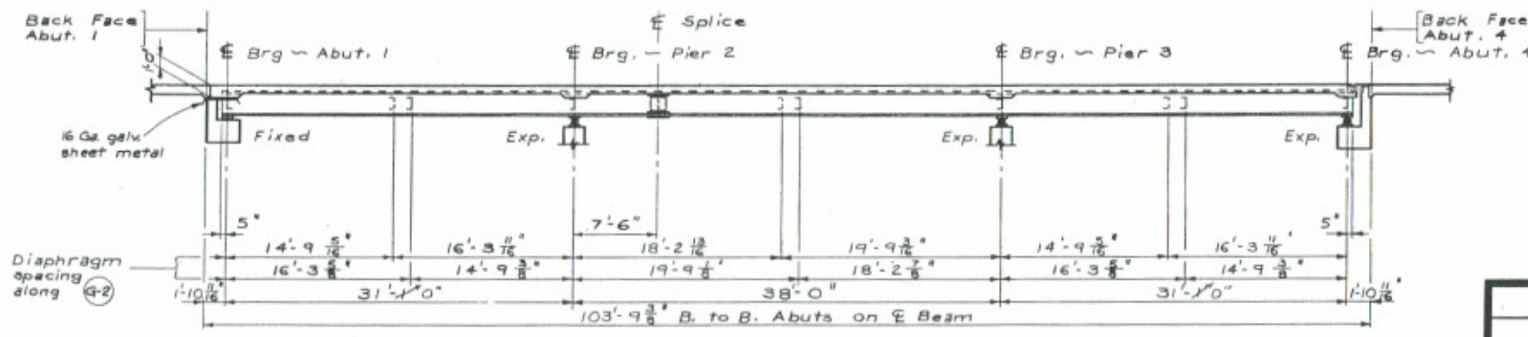

SECTION ALONG ℄ OF BEAM
H-17-L SOUTHBOUND

DIVISION OF HIGHWAYS

SUPERSTRUCTURE DETAILS
H-17-L SOUTHBOUND

Designer D. Peterson		Structure Numbers	H-17-J Northbound
Detailer K. Sharpley			H-17-L Southbound
Drawing Number B 15	of 26	Drawings	

FEDERAL ROAD REGION NO.	DISTRICT	PROJ. NO.	SHEET NO.	TOTAL SHEETS
VIII	COLORADO	I 25-2 (113)	60	

REVISIONS

AS CONSTRUCTED
NO REVISIONS DATE 3/23/76

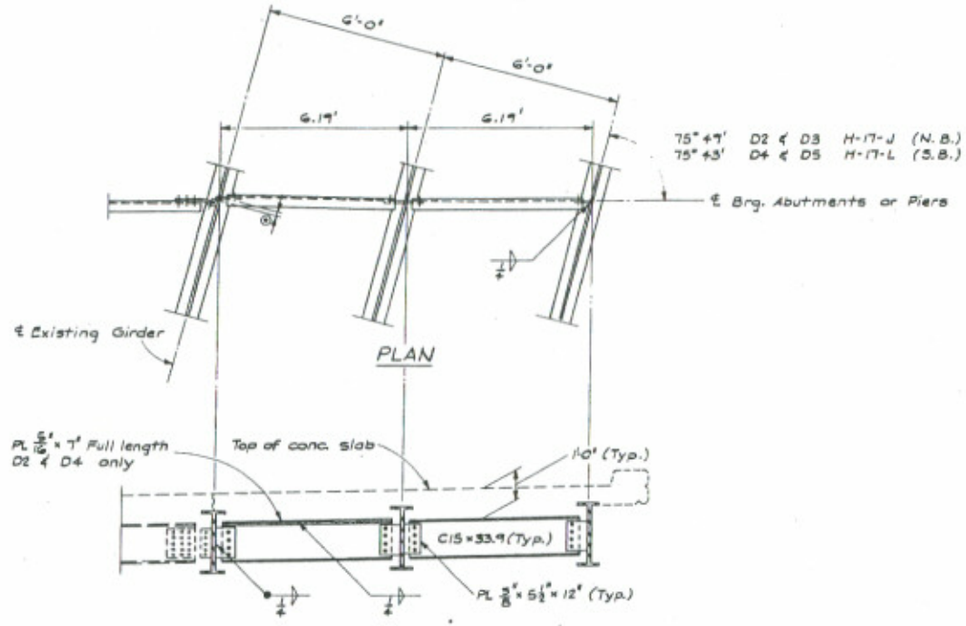

PLAN

DIAPHRAGM D2, D3, D4 & D5 — ELEVATION

Diaphragm D2 & D3 shown; D4 & D5 similar except slope.
@ Offset new 3/8" plates to miss existing rivets (Typ.).

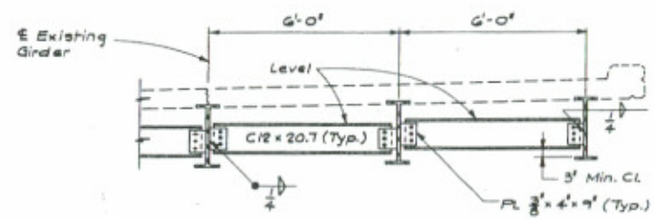

DIAPHRAGM D1 — ELEVATION

NOTES:
All diaphragm bolts are 3/4"ϕ.

The intermediate diaphragm (D1) bolted connections shall not be torqued until the slab has been poured.

Holes in plate to be slotted (1 1/2" x 13/16" slots).

Alterations of the existing exterior girder will not be measured and paid for separately but shall be included in the cost of new structural steel. Areas of girder onto which weld metal will be deposited shall be thoroughly cleaned free of old paint before welding is started.

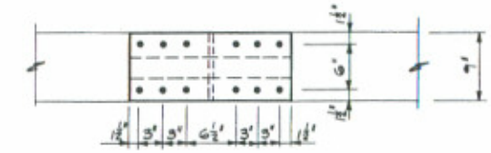

TOP AND BOTTOM PLATES

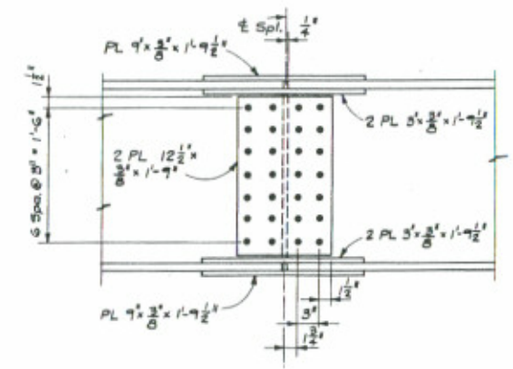

ELEVATION

SPLICE DETAILS
Note: All splice bolts are H.S. 7/8"ϕ.

DIVISION OF HIGHWAYS

SUPERSTRUCTURE DETAILS

Designer	D. Peterson	Structure Numbers	H-17-J Northbound
Detailer	B. Walton		H-17-L Southbound
Drawing Number B 17 of 26 Drawings			

Revision Date (Preliminary Stage Only)

FEDERAL ROAD REGION NO.	DIVISION	PROJ. NO.	SHEET NO.	TOTAL SHEETS
VIII	COLORADO	I 25-2(113)	61	

REVISIONS

AS CONSTRUCTED
NO REVISIONS DATE 3/23/76

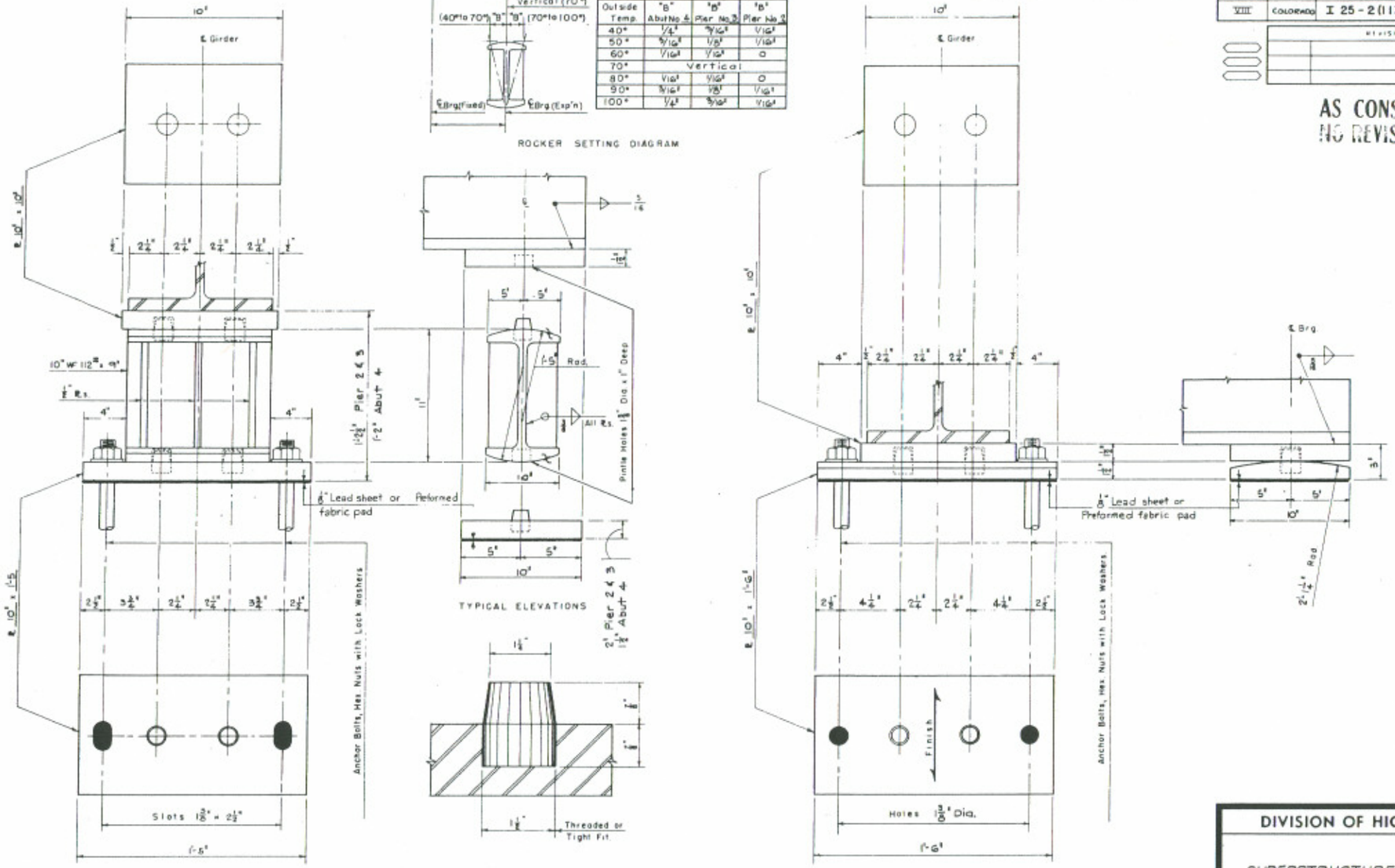

ROCKER SETTING DIAGRAM

Outside Temp.	"B" Abut No. 4	"B" Pier No. 3	"B" Pier No. 2
40°	1/4"	9/16"	1/16"
50°	9/16"	1/8"	1/16"
60°	1/16"	1/16"	0
70°	Vertical		
80°	1/16"	1/16"	0
90°	9/16"	1/8"	1/16"
100°	1/4"	9/16"	1/16"

TYPICAL ELEVATIONS

PINTLE DETAIL

EXPANSION BEARING
2 Req'd. for Pier 2 (H-17-J)
2 Req'd. for Pier 2 (H-17-L)
2 Req'd. for Pier 3 (H-17-J)
2 Req'd. for Pier 3 (H-17-L)
2 Req'd. for Abut 4 (H-17-J)
2 Req'd. for Abut 4 (H-17-L)

FIXED BEARING
2 Req'd. for Abut 1 (H-17-J)
2 Req'd. for Abut 1 (H-17-L)

DETAILS OF BEARINGS

Rocker may be built from plates equal in thickness to designated WF Section or may be made from Cast Steel.

DIVISION OF HIGHWAYS

SUPERSTRUCTURE DETAILS

Designer: D. Peterson | Detailer: B. Walton
Structure Numbers: H-17-J Northbound, H-17-L Southbound
DWG. No. B 20 of 26

(7-1-74)

Revision Dates (Preliminary Stage Only)

AS CONSTRUCTED
NO REVISIONS DATE 3/23/76

FEDERAL HIGHWAY ADMIN. NO.	DISTRICT	PROJ. NO.	SHEET NO.	TOTAL SHEETS
XIII	COLORADO	I 25 - 2(113)	62	

REVISIONS		

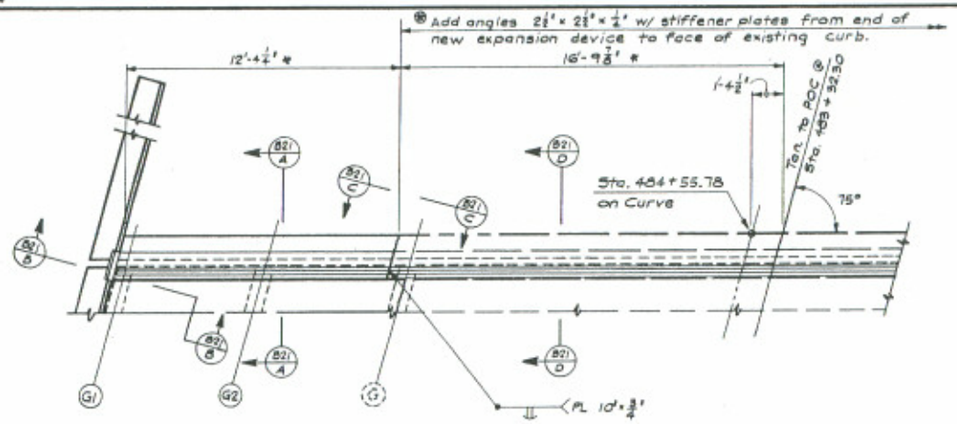

PLAN SHOWING ROADWAY EXPANSION DEVICE FOR NEW WIDENED PORTION
ABUTMENT NO. 4 — H-17-L (S. B.)

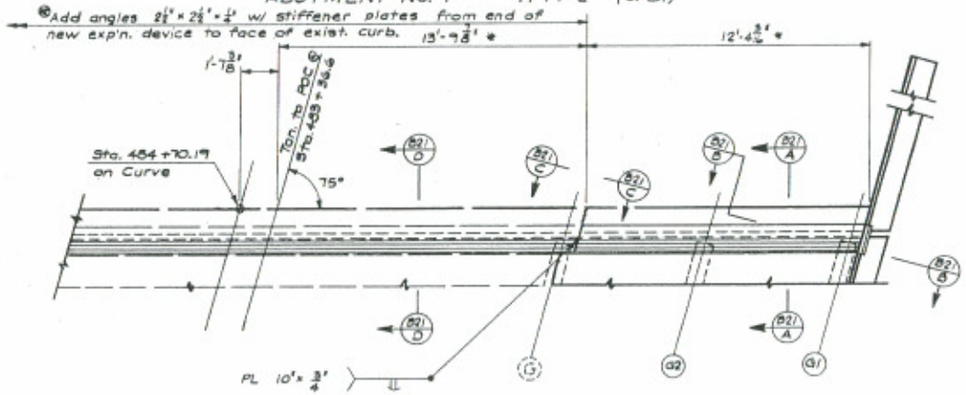

PLAN SHOWING ROADWAY EXPANSION DEVICE FOR NEW WIDENED PORTION
ABUTMENT NO. 4 H-17-J (N. B.)

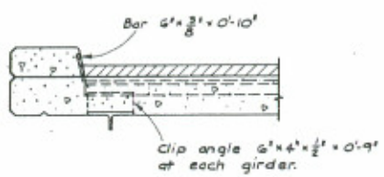

SECTION B21/B

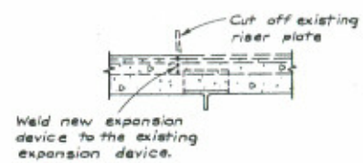

SECTION B21/C

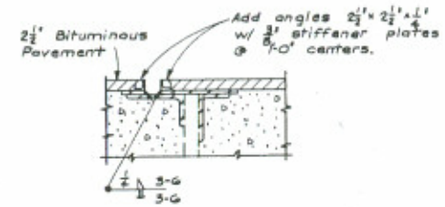

SECTION B21/D

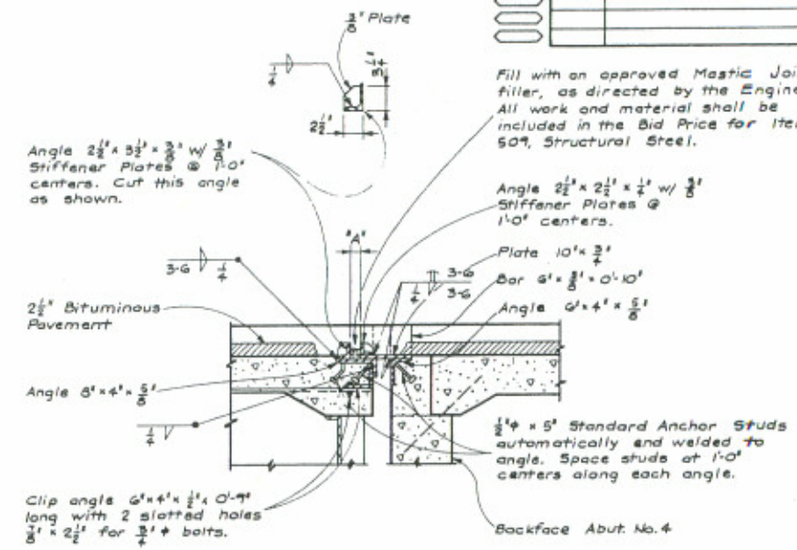

Outside Temp.	Dimension "A"
30°	2⅜"
40°	2¼"
50°	2⅛"
60°	2"
70°	1⅞"
80°	1¾"
90°	1⅝"
100°	1½"

SECTION B21/A

*All work necessary to attach new angles to existing device shall be included in the Bid Price for Item 509, Structural Steel. Length of angles shall be verified in the field prior to fabrication.

* These dimensions shall be verified in the field prior to fabrication of structural steel.

The construction sequence for modifing the existing Expansion Device and method of traffic control shall be approved by the Engineer.

DIVISION OF HIGHWAYS

SUPERSTRUCTURE DETAILS

Designer D. Peterson		Structure Numbers	H-17-J Northbound
Detailer B. Walton			H-17-L Southbound
Drawing Number B 21	of 26 Drawings		

AS CONSTRUCTED
NO REVISIONS DATE 3/25/76

FEDERAL ROAD ADMIN. NO.	DISTRICT	PROJ. NO.	SHEET NO.	TOTAL SHEETS
VIII	COLORADO	I 25-2(113)	63	

REVISIONS			
R-1	HHR	Add membrane	4-8-75

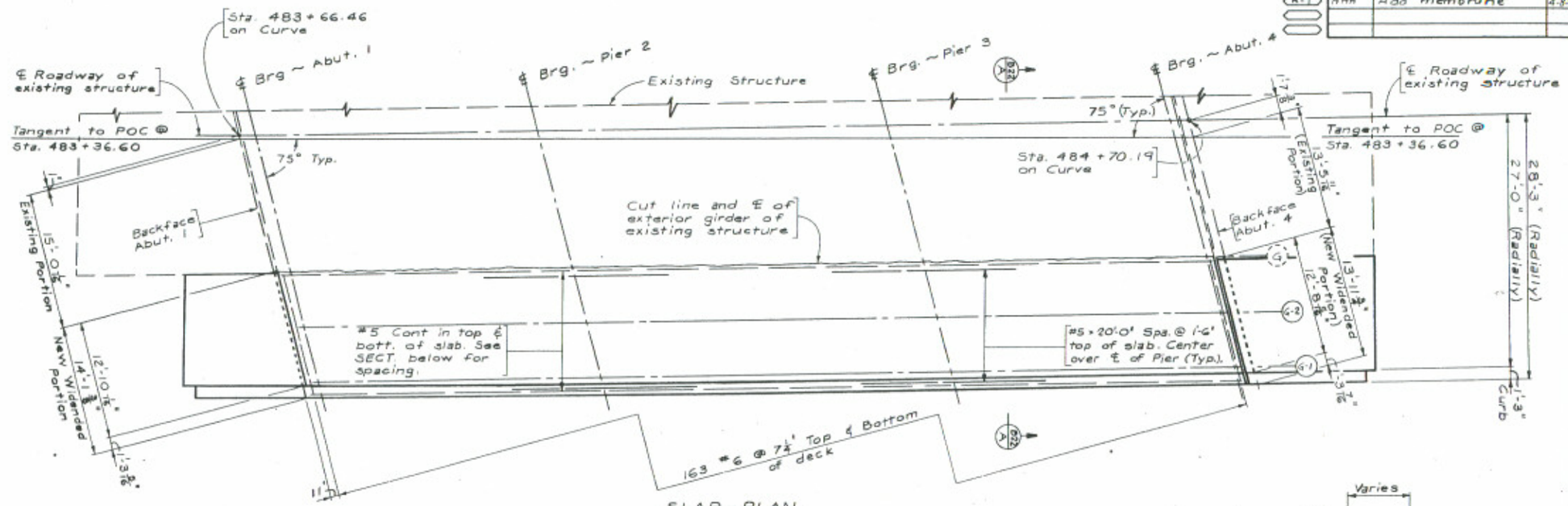

SLAB-PLAN
H-17-J NORTHBOUND

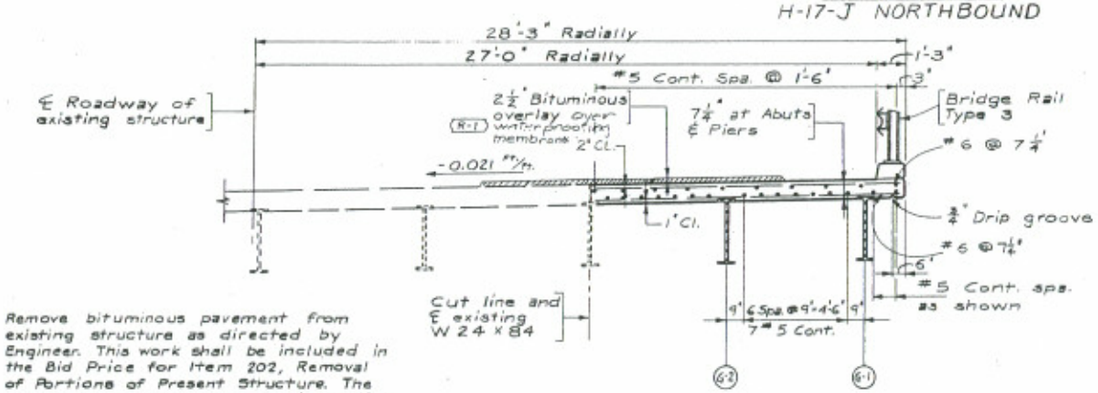

SECTION

Remove bituminous pavement from existing structure as directed by Engineer. This work shall be included in the Bid Price for Item 202, Removal of Portions of Present Structure. The Contractor shall arrange for inspection of the existing concrete deck prior to the placement of the bituminous overlay. If additional deck preparation is required it shall be paid for as extra work.

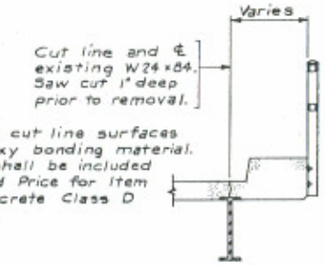

Coat all cut line surfaces with Epoxy bonding material. Epoxy shall be included in the Bid Price for Item 601, Concrete Class D (Bridge).

CUT LINE DETAIL ~ SUPERSTRUCTURE
Showing portions of present structure to be removed.

Note:
Slab thickness shall be increased ⅛" at ℄ of end spans and ¼" at ℄ of center span to compensate for dead load deflection.

See Dwg. No. B-24 for curb dowels and reinforcing.

Clean and straighten projecting slab reinforcing to lap with new slab reinforcing.

Existing railing and posts shall become the property of the Division of Highways State of Colorado.

DIVISION OF HIGHWAYS

SUPERSTRUCTURE DETAILS
H-17-J NORTHBOUND

Designer D. Peterson	Structure Numbers H-17-J Northbound, H-17-L Southbound
Detailer K. Sharpley	
Drawing Number B 22 of 26 Drawings	

AS CONSTRUCTED
NO REVISIONS DATE 3/23/76

FEDERAL ROAD PROJECT NO.	DISTRICT	PROJ. NO.	SHEET NO.	TOTAL SHEETS
XXXX	COLORADO	I 25-2(113)	64	

REVISIONS		
R-1	Add waterproofing	4-8-75

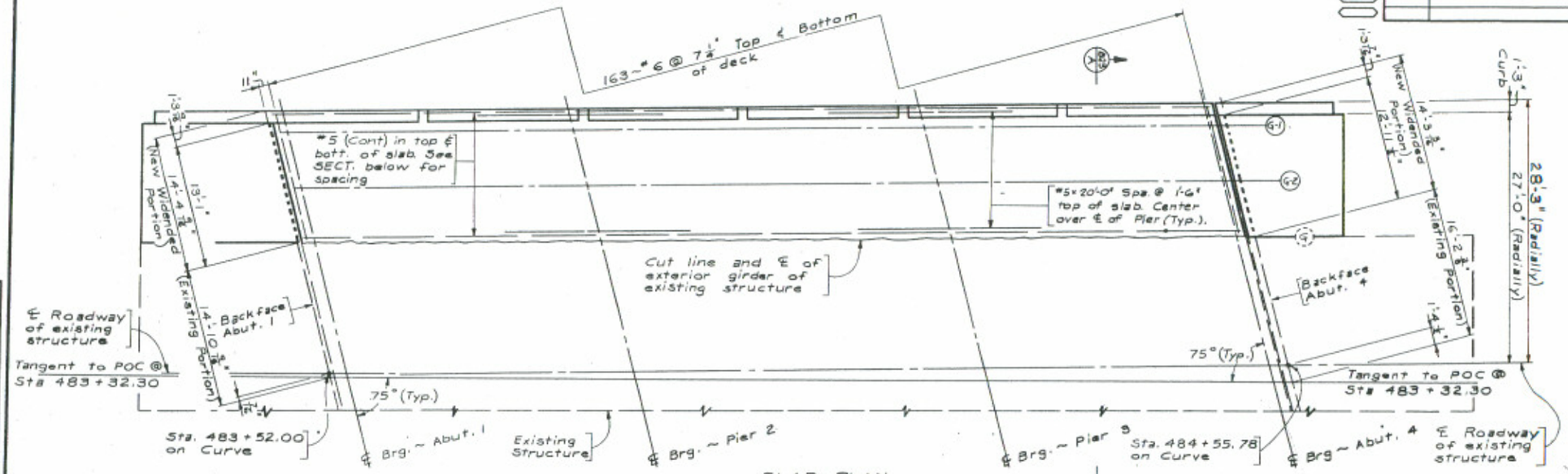

SLAB - PLAN
H-17-L SOUTHBOUND

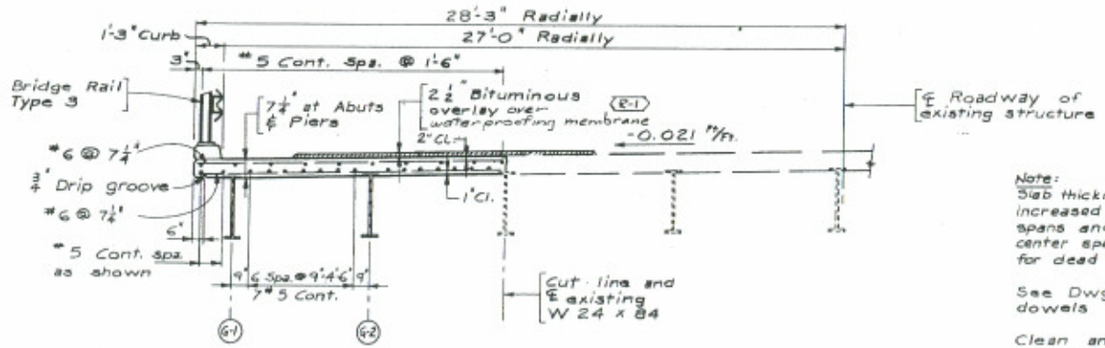

SECTION

Remove bituminous pavement from existing structure as directed by Engineer. This work shall be included in the Bid Price for Item 202, Removal of Portions of Present Structure. The Contractor shall arrange for inspection of the existing concrete deck prior to the placement of the bituminous overlay. If additional deck preparation is required it shall be paid for as extra work.

Coat all cut line surfaces with Epoxy bonding material. Epoxy shall be included in the Bid Price for Item 601, Concrete, Class D (Bridge).

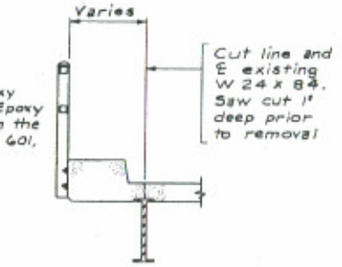

CUT LINE DETAIL - SUPERSTRUCTURE

Showing portions of present structure to be removed.

Note:
Slab thickness shall be increased ⅛" at ℄ of end spans and ¼" at ℄ of center span to compensate for dead load deflection.

See Dwg. No. B-24 for curb dowels and reinforcing.

Clean and straighten projecting slab reinforcing to lap with new slab reinforcing.

Existing railing and posts shall become the property of the Division of Highways State of Colorado.

DIVISION OF HIGHWAYS

SUPERSTRUCTURE DETAILS
H-17-L SOUTHBOUND

Designer D. Peterson		Structure Numbers	H-17-J Northbound
Detailer K. Sharpley			H-17-L Southbound
Drawing Number B 23 of 26 Drawings			

BRIDGE STANDARD -10-

AS CONSTRUCTED
NO REVISIONS DATE 3/25/76

FEDERAL ROAD REGION NO.	DIVISION	PROJ. NO.	SHEET NO.	TOTAL SHEETS
VIII	COLORADO	I 25 - 2 (113)	65	

REVISIONS		

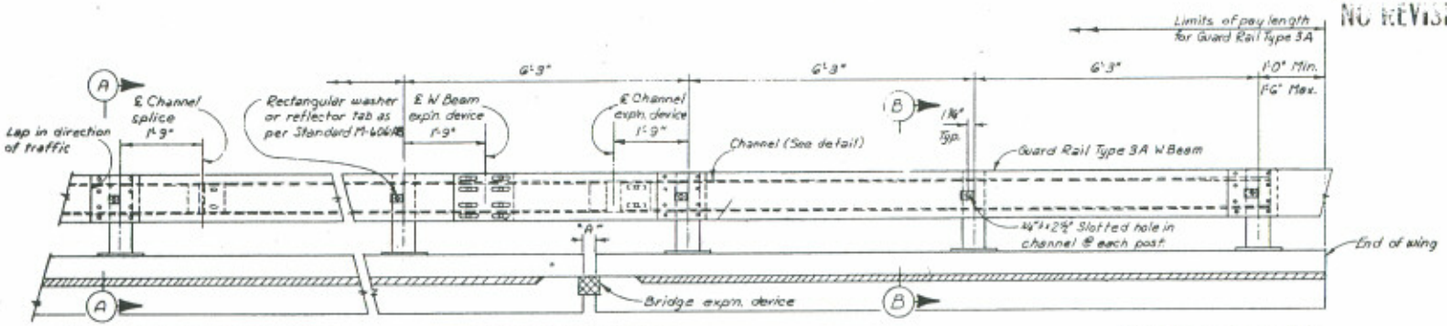

RAIL PANEL @ BRIDGE DECK (SPLICE)

RAIL PANEL @ EXP'N. DEVICE

RAIL PANEL @ END OF WING

ELEVATION BRIDGE RAIL

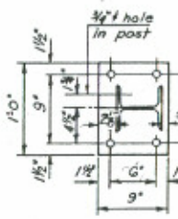

PLAN

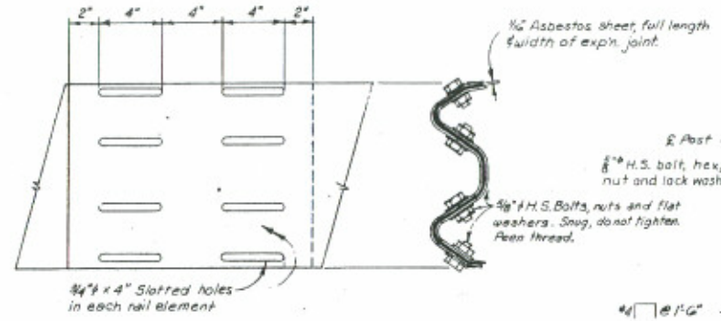

EXP'N. DEVICE (W-BEAM)

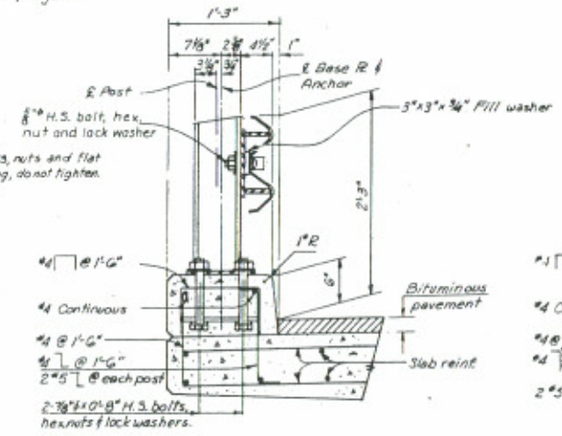

SECTION (A)

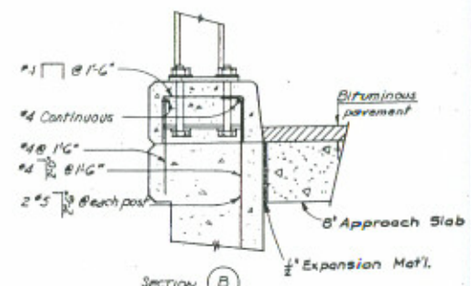

SECTION (B)

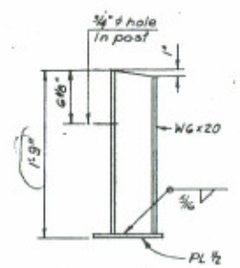

ELEVATION

POST DETAIL

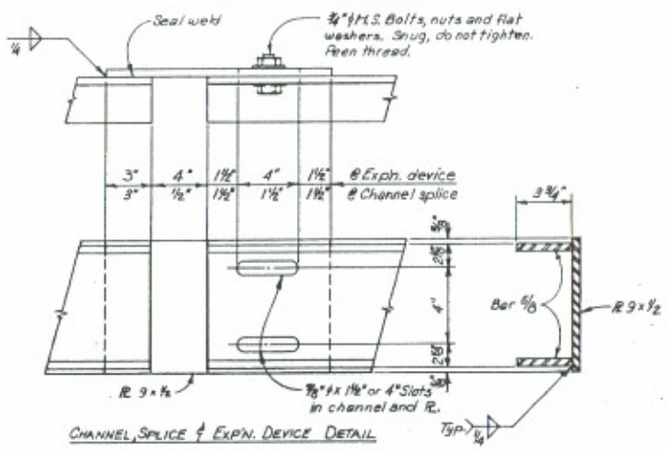

CHANNEL, SPLICE & EXP'N. DEVICE DETAIL

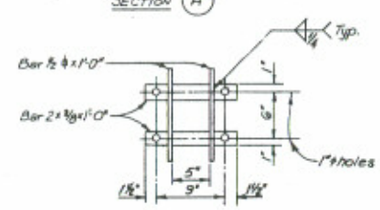

ANCHOR DETAIL

NOTES

POSTS SHALL BE PERPENDICULAR TO THE GRADE OF THE DECK.

ALL POSTS, CHANNEL, CHANNEL SPLICE, EXPANSION DEVICE, ANCHOR ASSEMBLY, BOLTS, NUTS AND WASHERS SHALL BE GALVANIZED AFTER FABRICATION IN ACCORDANCE WITH THE SPECIFICATIONS AND SHALL BE MEASURED AND PAID FOR IN ACCORDANCE WITH SECTION 509.

CHANNEL SHALL BE CONTINUOUS OVER NOT LESS THAN TWO (2) POSTS.

POSTS AT EXPANSION JOINT SHALL BE 1'-9" MINIMUM FROM THE CENTER LINE OF THE JOINT TO CENTER LINE OF POST MEASURED ALONG THE CENTER LINE OF POSTS.

ONE OR MORE 6'-3" PANELS MAY BE REDUCED (5'-0" MIN.) IN ORDER TO MAINTAIN DIMENSIONS FROM THE END OF WINGS AND EXPANSION JOINTS.

ALL EXPOSED CORNERS SHALL BE GROUND SMOOTH.

SEE STANDARD M-606-AB FOR ADDITIONAL DETAILS.

1-9
+2

DATE	ISSUED BY	CHECKED BY	ISSUED BY
12-26-74			

DIVISION OF HIGHWAYS

BRIDGE RAIL TYPE 3

Designer J. GRAVINA		Structure Numbers	M-17-J
Detailer J.R. EVERT			M-17-L
Drawing Number B 24 of 26 Drawings			

Revision Date | Preliminary Issue 10-1-71

(12-26-74)

FEDERAL ROAD REGION NO.	DISTRICT	PROJ. NO.	SHEET NO.	TOTAL SHEETS
VIII	COLORADO	I 25-2(113)	66	

REVISIONS

AS CONSTRUCTED
NO REVISIONS DATE 3/23/76

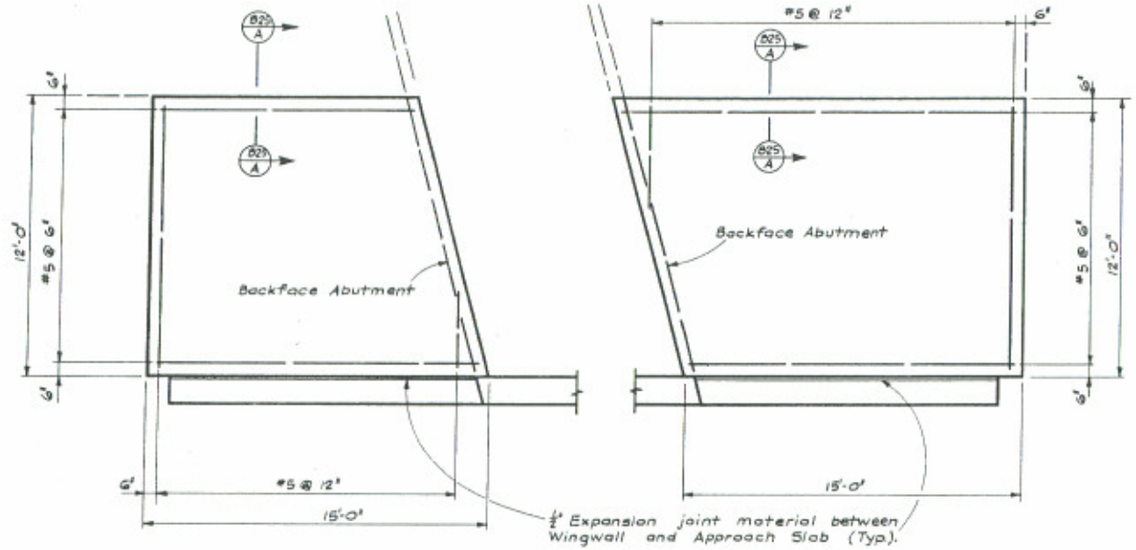

PLAN — APPROACH SLAB
ABUTMENT NO. 1 — H-17-J
ABUTMENT NO. 4 — H-17-L

PLAN — APPROACH SLAB
ABUTMENT NO. 4 H-17-J
ABUTMENT NO. 1 H-17-L

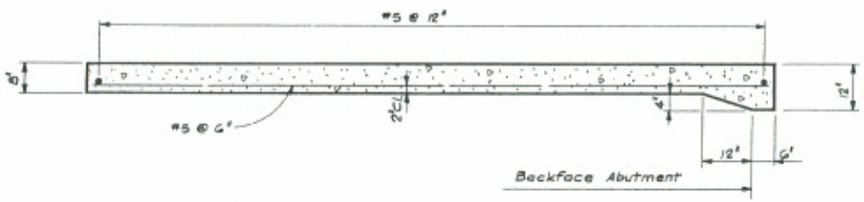

TYPICAL LONGITUDINAL SECTION THRU APPROACH SLAB

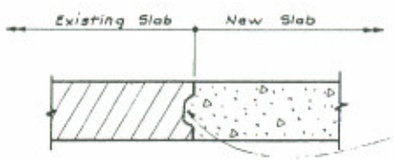

SECTION B25 A

Note:
Portions of existing Approach Slabs that interfere with the new construction shall be removed as directed by the Engineer. All work shall be included in the Bid Price for Item 202, Removal of Portions of Present Structure.

Roughen edge of existing Approach Slab to provide keyway, as directed by Engineer. Work shall be included in the bid price for Item 601 Concrete, Class "A".

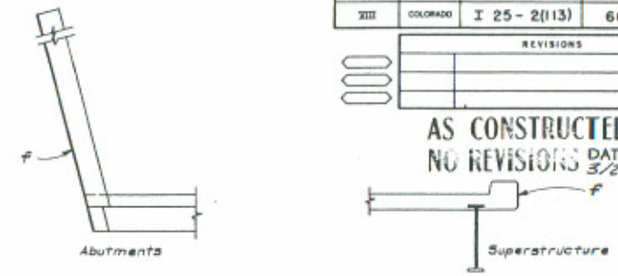

SURFACE FINISH DETAILS

Shows portions of structure to receive class 2 surface finish.

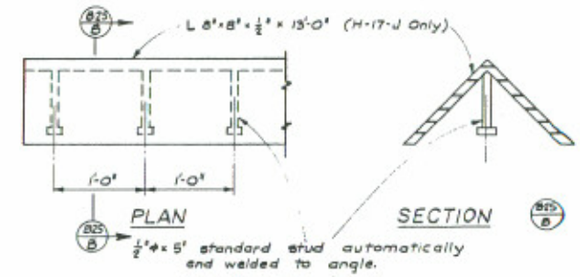

PLAN B25 B

SECTION B25 B

PIER NOSE ANGLE DETAILS
(2 Required)

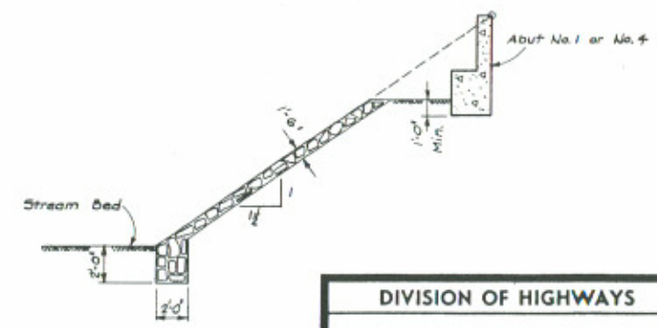

DETAIL OF RIPRAP WITH TOE

Note: Transition ends of riprap may be modified by the Engineer to fit conditions encountered in the field.

DIVISION OF HIGHWAYS

APPROACH SLAB DETAILS
MISCELLANEOUS DETAILS

Designer D. Peterson		Structure Numbers	H-17-J Northbound
Detailer B. Walton			H-17-L Southbound
Drawing Number B 25	of 26	Drawings	

Revision Dates (Preliminary Stage Only)

AS CONSTRUCTED			
NO REVISIONS		REVISED 5/11/87	VOID

FEDERAL ROAD REGION NO.	DIVISION	PROJ. NO.	SHEET NO.	TOTAL SHEETS
VIII	COLORADO	IR 25-2(195)	24	

REVISIONS			
R-1	6-6-86	Changed Quantities	RAD

BRIDGE STANDARD O

GENERAL NOTES

ALL WORK SHALL BE DONE ACCORDING TO THE STANDARD SPECIFICATIONS OF THE DIVISION OF HIGHWAYS, STATE OF COLORADO, APPLICABLE TO THE PROJECT.

Expansion Joint Material shall meet AASHTO Specification M-213.

The following Structural Steel shall be AASHTO M-183 (ASTM A-36): Rail Posts.

STATIONS, ELEVATIONS, AND DIMENSIONS CONTAINED IN THESE PLANS ARE CALCULATED FROM THE "AS CONSTRUCTED PLANS." THESE STATIONS, ELEVATIONS AND DIMENSIONS MAY BE ADJUSTED TO MEET THE EXISTING STRUCTURE. THE CONTRACTOR SHALL VERIFY ALL DEPENDENT DIMENSIONS IN THE FIELD BEFORE ORDERING OR FABRICATING ANY MATERIAL.

FINAL SUMMARY OF QUANTITIES

	Item No.	Description	Unit	H-17-J	H-17-L	Total	BOOK	PAGE
	202	Removal of Asphalt Mat (Planing)	Ton	40	27	67	1	3
	202	Removal of Bridge Railing	Lin. Ft.	225 ~~231~~	225 ~~232~~	450 ~~463~~	1	5
	403	Hot Bituminous Pavement (Gr. E)(Haul & Asphalt)	Ton	54	54	108		
(1)	509	Structural Steel (Galvanized)	Lb.	1300	1300	2600	1	28
	518	Bridge Expansion Device (0-4 Inch)	Lin. Ft.	44	44	88		29
R-1	518	Elastomeric Concrete End Dam	Lin. Ft.	88	88	176	1	30
	606	Bridge Rail Type 3R	Lin. Ft.	100	100	200	1	35

(1) Includes posts and base plates on outside of Str. No's H-17-J & H-17-L.

INDEX OF DRAWINGS

DWG. NO. B. 1 GENERAL INFORMATION - SUMMARY OF QUANTITIES
DWG. NO. B. 2 PLAN
DWG. NO. B. 3 BRIDGE EXPANSION DEVICE DETAIL
DWG. NO. B. 4 BRIDGE RAIL TYPE 3R
DWG. NO. B. 5 DETAILS FOR INSTALLING BRIDGE RAIL SUMMARY OF QUANTITIES

BRIDGE DESCRIPTION

Expansion device and rail replacement on 2 structures.

DESIGNED BY M.S.P. 3-86
CHECKED BY M.S.P. 3-86
DETAILED BY R.A.D. 3-86
QUANTITIES BY R.A.D. 3-86
CHECKED BY M.P.S. 3-86

DESIGN DATA

CURRENT AASHTO SPECIFICATIONS:

LIVE LOAD: AASHTO HS-20-44 AND INTERSTATE ALTERNATE
DEAD LOAD: ASSUMES 48 LBS. PER SQ. FT. FOR BITUMINOUS PAVEMENT

REINFORCED CONCRETE:

CLASS D CONCRETE: f_c = 1,800 psi, n = 8

STRUCTURAL STEEL: AASHTO M-183 (ASTM A-36) f_s = 20,000 psi

CROSS REFERENCE DRAWING NUMBER

SECTION OR DETAIL IDENTIFICATION

(11-1-79)

DIVISION OF HIGHWAYS			
GENERAL INFORMATION SUMMARY OF QUANTITIES			
Station			
Station			
Near	Sec	T	R
Designer M. Pulver		Structure Number(s) H-17-J	
Detailer R. Dickey		H-17-L	
Drawing Number B 1 of 5 Drawings			

Revision Dates (Preliminary Stage Only)

AS CONSTRUCTED							
NO REVISIONS		REVISED	5/16/87	VOID			

FED. ROAD REGION	DIVISION	PROJ. NO.	SHEET NO.	TOTAL SHEETS
XXX	COLO.	IR 25-2(195)	25	

REVISIONS

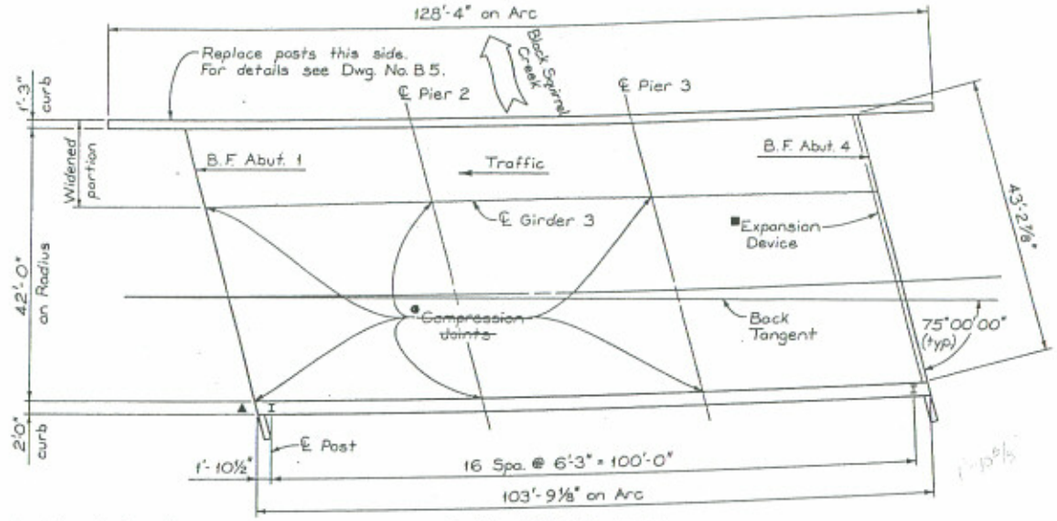

PLAN - STR NO. H-17-L

▲ Denotes required terminal section.
● See detail this sheet.
■ For details see Dwg. No. B 3.

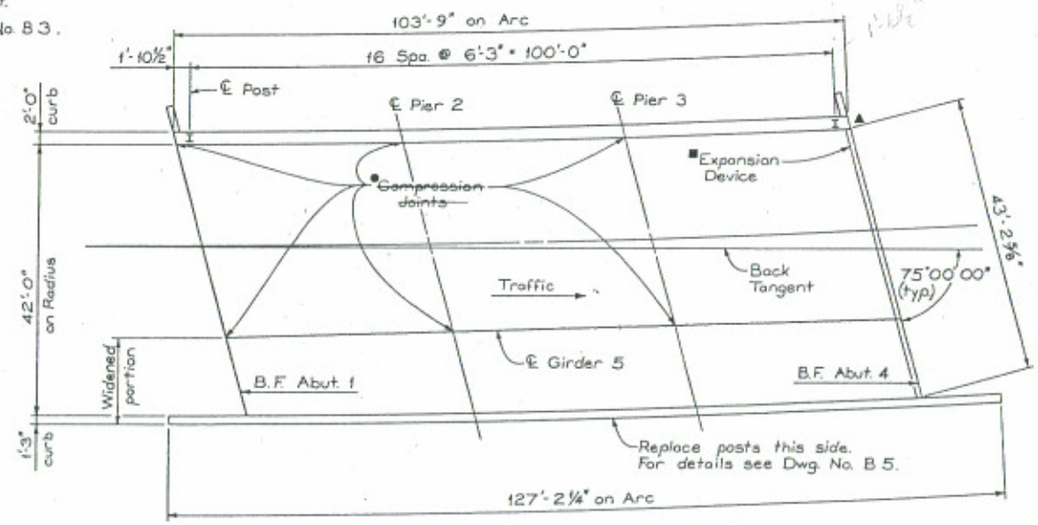

PLAN - STR. NO. H-17-J

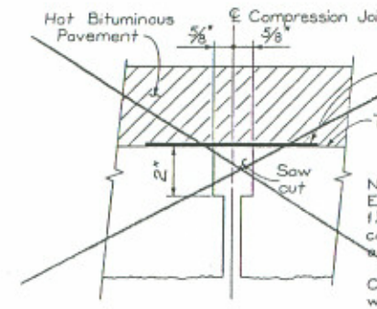

Note:
Existing opening to be saw cut as needed for a 1¼" opening for 1½" × 1½" uncompressed, closed-cell, foamed, cross lined, ethylene vinyl acetate/low density poly-ethylene copolymer.

Compression joint is discontinuous over widened portion.

Price to be included in the bid price of Item 518 Bridge Expansion Device (0-4 Inch)

~~COMPRESSION JOINT DETAIL~~

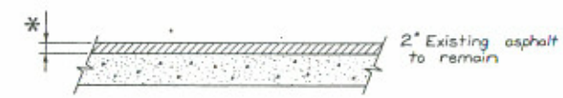

SECTION THRU EXISTING SLAB

		* For information only
Str. No.	H-17-J	Strip 1½" off of existing mat.
	H-17-L	Strip 1" off of existing mat.

DESIGNED BY	INITIAL	DATE	CHECKED BY	KDH	3-86
CHECKED BY	MEP	2-86	QUANTITIES BY	RAD	3-86
DETAILED BY	SC	3-86	CHECKED BY	MEP	3-86
	RAD	2-86			

DIVISION OF HIGHWAYS

PLAN

DESIGNER	M. Pulver	STRUCTURE NUMBERS	H-17-J
DETAILER	R. Dickey		H-17-L

DRAWING NUMBER B 2 OF 5 DRAWINGS

REVISION DATES (PRELIMINARY STAGE ONLY)

STATE OF COLORADO
STATE DEPARTMENT OF HIGHWAYS
DIVISION OF HIGHWAYS
D. O. H. FORM NO. 117
REV. OCT. 1983

AS CONSTRUCTED							
NO REVISIONS		REVISED	5/12/87	VOID			

FED. ROAD REGION	DIVISION	PROJ. NO.	SHEET NO.	TOTAL SHEETS
VIII	COLO.	IR25-2(195)	26	

REVISIONS			
R-1	6-6-86	Changed Notes	R/

STEP NO. 1 : Strip off existing asphalt as shown on Dwg. No. B 2.

STEP NO. 2 : Overlay with 2" of Hot Bituminous Pavement.

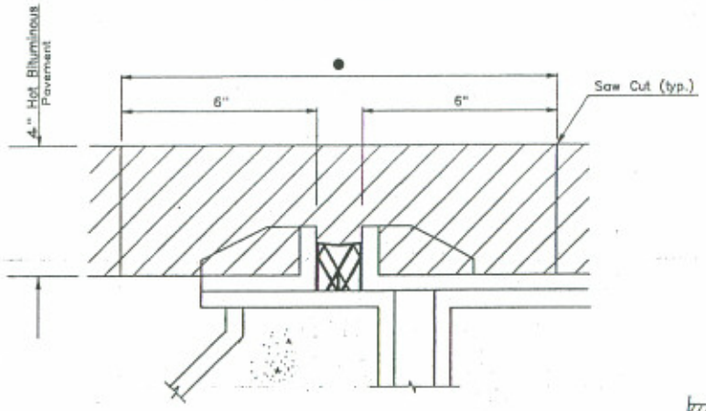

● After removing bituminous pavement in this area, sandblast top of concrete and steel angle. Remove all loose particles before placing expansion device and elastomeric concrete end dam.

STEP NO. 3

Existing device to remain in place.

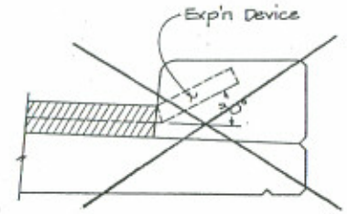

CURB ELEVATION

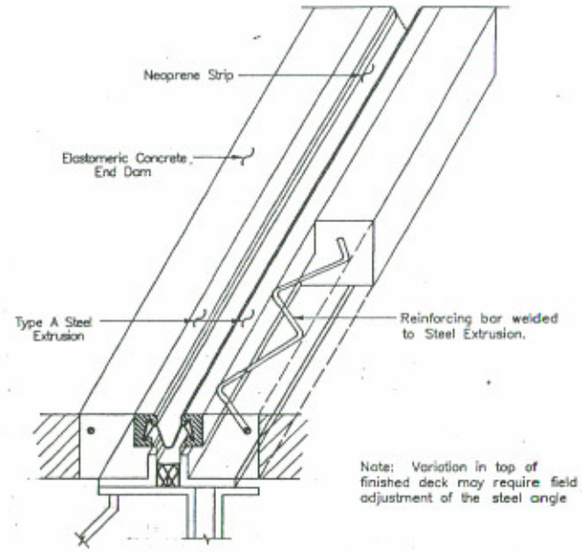

Note: Variation in top of finished deck may require field adjustment of the steel angle

DETAIL AT EXPANSION DEVICE

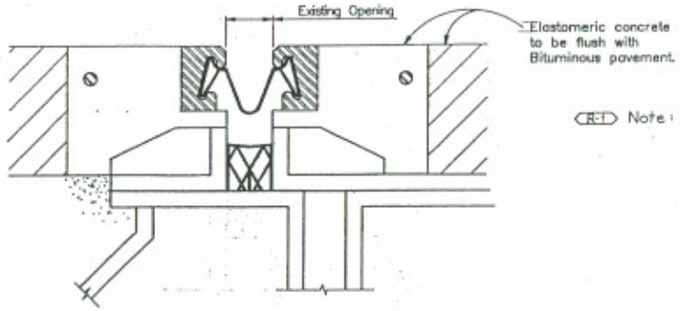

STEP NO. 4

R-1 Note: 6" wide × 4" deep × 1'-0" = 1 Lin. Ft. of Item 518, Elastomeric Concrete End Dam.

Note: Fabricator of expansion device will show special field weld details to handle stage construction on their shop drawings.

ACCEPTABLE ALTERNATES

Wabo-S-400
Gen-Strip CD
R-1 Onflex 40-SEQ
D.S Brown SS-400

DESIGNED BY	INITIAL	DATE	CHECKED BY		
	MEP	2-86		KDH	3-86
CHECKED BY	SC	3-86	QUANTITIES BY	RAD	3-86
DETAILED BY	RAD	2-86	CHECKED BY	MEP	3-86

DIVISION OF HIGHWAYS

BRIDGE EXPANSION DEVICE DETAIL

DESIGNER	M. Pulver	STRUCTURE NUMBERS	H-17-J
DETAILER	R. Dickey		H-17-L

DRAWING NUMBER B 3 OF 5 DRAWINGS

REVISION DATES 6/85 (PRELIMINARY STAGE ONLY)

EXPDEV4

NO number C... 85 00:15:57 _DUAL:(DRAW.STDS.BSTDS) EXPDEV4

STATE OF COLORADO
STATE DEPARTMENT OF HIGHWAYS
DIVISION OF HIGHWAYS
D. O. H. FORM NO. 1261
REV. FEB. 1964

AS CONSTRUCTED			
NO REVISIONS	5/12/87	REVISED	VOID

FED. ROAD REGION	DIVISION	PROJ. NO.	SHEET NO.	SH TOT
VIII	COLO.	IR 25-2(195)	27	

REVISIONS

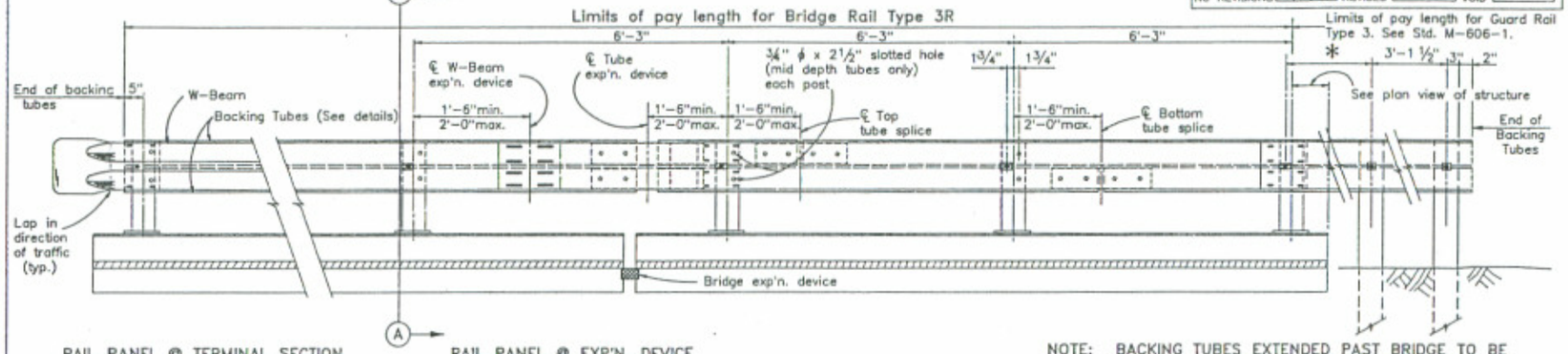

NOTE: BACKING TUBES EXTENDED PAST BRIDGE TO BE INCLUDED IN ITEM 606 – BRIDGE RAIL TYPE 3R.

RAIL PANEL @ TERMINAL SECTION

(See roadway plans for ends requiring terminal section.)

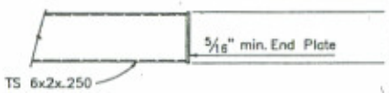

END DETAIL – BACKING TUBES

RAIL PANEL @ EXP'N. DEVICE

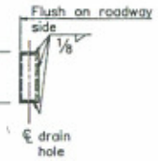

ELEVATION – BRIDGE RAIL

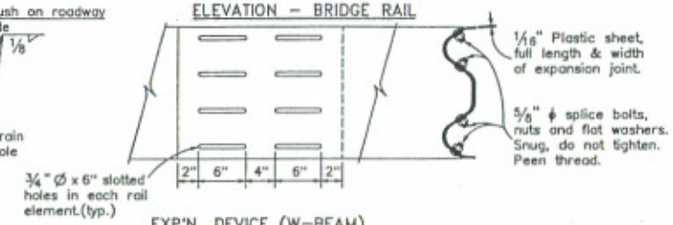

EXP'N. DEVICE (W-BEAM)

POST DETAIL MEASUREMENTS

STR. NO.	▲	■	*
H-17-J	1'-9"	1'-9"	6'-3"
H-17-L	1'-9"	1'-9"	6'-3"

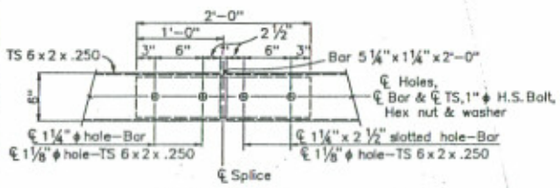

TUBE SPLICE

Top and bottom tube splices shall not be located together but staggered as shown.

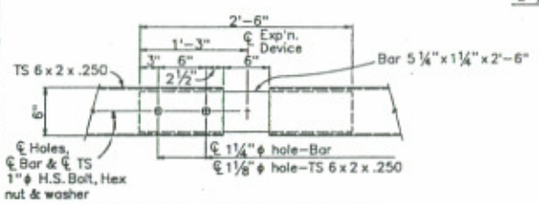

BACKING TUBE @ EXP'N DEVICE

Req'd. near all bridge exp'n. joints as shown on the plans.

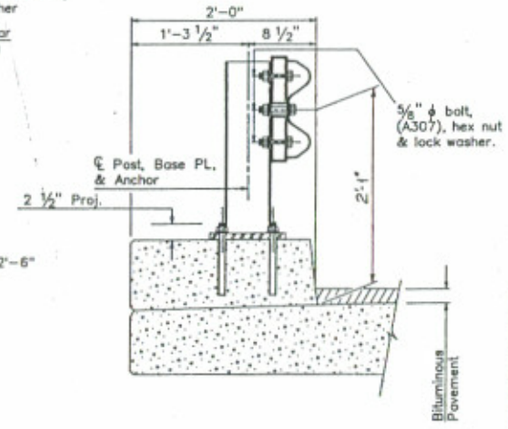

SECTION (A)

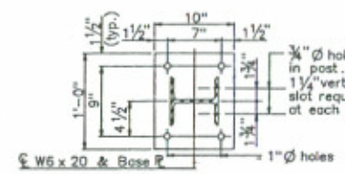

PLAN

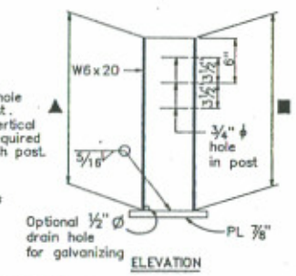

ELEVATION

POST DETAIL

INFORMATION ONLY

Description	Unit	Per Lin. Ft.
Structural Steel (Galvanized)	Lb.	51.6 Avg.
Bridge Rail Type 3R –W Beam	Lin.Ft.	1.0

Note: At each expansion device add 235 lb. of Structural Steel (Galvanized)

NOTES

ALL TUBES SHALL BE FABRICATED FROM ASTM A-500 GRADE B.

ALL POSTS SHALL BE FABRICATED FROM ASTM A-36 STEEL. ALL SPLICES AND EXPANSION DEVICES FOR TUBE SHALL BE FABRICATED FR ASTM A572, GRADE 50. THE ABOVE MATERIAL W-BEAM, AND ALL ANCHOR BOLTS AND MISCE LANEOUS BOLTS, NUTS AND WASHERS SHALL GALVANIZED AFTER FABRICATION IN ACCORD- ANCE WITH THE SPECIFICATIONS.

POSTS, BASE PLATES, ANCHOR BOLTS, MISC- ELLANEOUS BOLTS, NUTS, WASHERS, TUBES, TUBE EXPANSION DEVICES, TUBE SPLICES, END PLATES, W-BEAM, AND W-BEAM EXPANSI DEVICES SHALL BE INCLUDED IN ITEM 606 – BRIDGE RAIL TYPE 3R.

THE BACKING TUBES SHALL BE SHOP BENT O FABRICATED TO FIT HORIZONTAL CURVE WHEN RADIUS IS LESS THAN 1500 FEET.

TUBES SHALL BE CONTINUOUS OVER NOT LES THAN TWO POSTS.

POSTS SHALL BE PERPENDICULAR TO THE GR OF THE DECK.

CONTRACTOR SHALL PROVIDE TERMINAL SECTIO (FLARED) WHEN NO APPROACH GUARD RAIL IS USED WITH THE COST INCLUDED IN ITEM 606 BRIDGE RAIL, TYPE 3R. FOR DETAILS SEE STD. M-606-1.

FOR ADDITIONAL DETAILS, SEE STD. M-606-1.

OPTIONAL DRAIN HOLE FOR GALVANIZING MAY BE DRILLED, PUNCHED, OR CLIPPED LEAVING SMOOTH SURFACES AND TRANSITIONS. NO FLAME CUTTING OR AIR CARBON ARC GOUGING IS ALLOWED.

STRUCTURAL STEEL:

AASHTO M-183(ASTM A-36)	f_s = 20,000
AASHTO M-223(ASTM A-572) GRADE 50	f_s = 37,500
COLD FORMED ASTM A-500 GRADE B	f_s = 27,600

DIVISION OF HIGHWAYS

BRIDGE RAIL TYPE 3R

DESIGNER	M. Pulver	STRUCTURE NUMBERS	H-17-J
DETAILER	R. Dickey		H-17-L
DRAWING NUMBER B 4 OF 5			DRAWING

REVISION DATES			GRAD. (PRELIMINARY STAGE ONLY)		
5/85	6/85	3/86			

	INITIAL	DATE		CHECKED BY	DATE
DESIGNED BY	M.E.P.	2-85		K.D.H.	3-86
CHECKED BY	S.C.	3-86	QUANTITIES BY	R.A.D.	3-86
DETAILED BY	R.A.D.	2-86	CHECKED BY	M.E.P.	3-86

BRT1

HD NUMBER 0:\-/86 16:20:38 :DGN: STDS_MSTDS1 BRT1

STATE OF COLORADO
STATE DEPARTMENT OF HIGHWAYS
DIVISION OF HIGHWAYS
C. O. H. FORM NO. 126
REV. FEB. 1984

AS CONSTRUCTED			
NO REVISIONS	REVISED 3/16/87	VOID	

FED. ROAD REGION	DIVISION	PROJ. NO.	SHEET NO.	SHE TOTA
VIII	COLO.	IR 25-2(195)	28	

REVISIONS

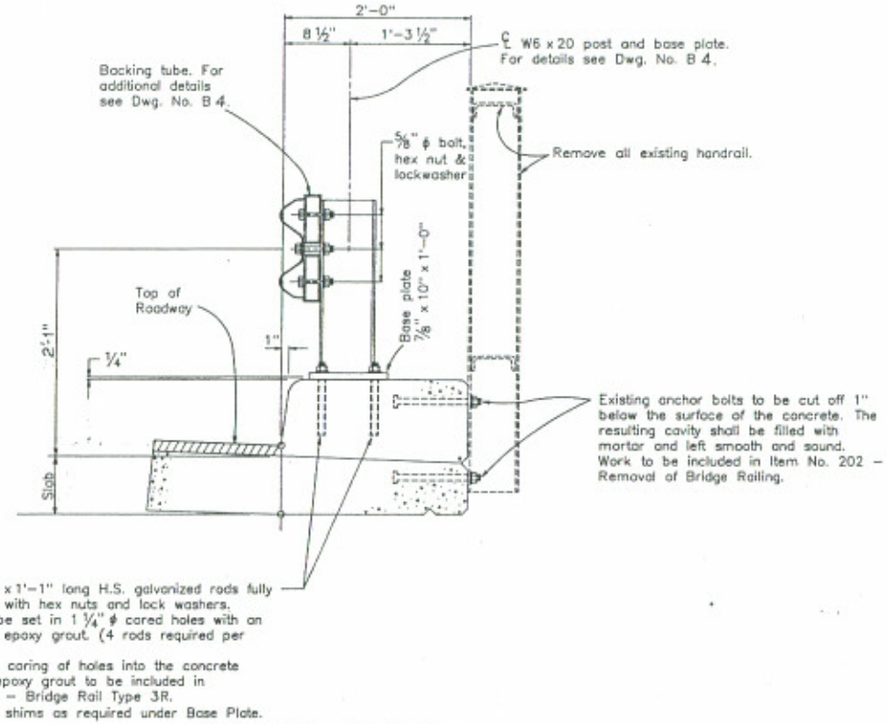

BRIDGE RAIL TYPE 3R
For Str. No's H-17-J & H-17-L (Median Side Only)

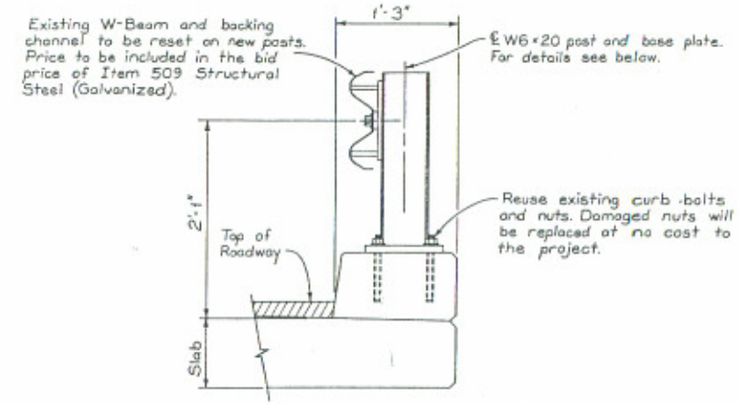

POST REPLACEMENT DETAIL
For Str. No's H-17-J & H-17-L (Outside Only)

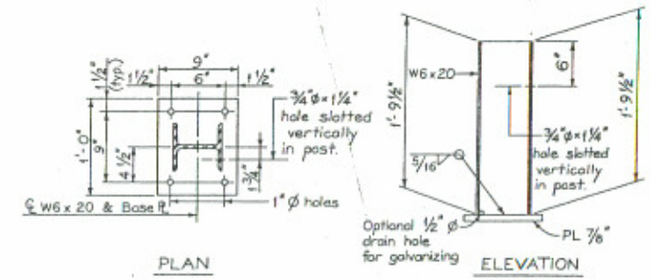

POST DETAIL
For Str. No's H-17-J & H-17-L (Outside Only)

SUMMARY OF QUANTITIES

BOOK	PAGE	Item No.	Description	Unit	Str. No. H-17-J	Str. No. H-17-L	Str. No.	Str. No.	Str. No.	Str. No.	Str. No.	Str. No.
1	5	202	Removal of Bridge Railing	Lin.Ft.	~~231~~ 225	~~232~~ 225						
1	35	606	Bridge Rail Type 3R	Lin.Ft.	100	100						

GENERAL NOTES

ALL WORK SHALL BE DONE ACCORDING TO THE STANDARD SPECIFICATIONS OF THE DIVISION OF HIGHWAY, STATE OF COLORADO, APPLICABLE TO THE PROJECT.

DIMENSIONS CONTAINED IN THESE PLANS ARE CALCULATED FROM THE "AS CONSTRUCTED PLANS." THESE DIMENSIONS MAY BE ADJUSTED TO MEET THE EXISTING STRUCTURE. THE CONTRACTOR SHALL VERIFY ALL DEPENDENT DIMENSIONS IN THE FIELD BEFORE ORDERING OR FABRICATING ANY MATERIAL.

DRAWINGS REFLECT THE FINISHED CONDITION AND NOT THE EXISTING CONDITIONS. ALL WORK TO GET TO FINISHED PRODUCT WILL BE INCLUDED IN THE COST.

DIVISION OF HIGHWAYS
DETAILS FOR INSTALLING BRIDGE RAI
SUMMARY OF QUANTITIES

DESIGNER	M. Pulver	STRUCTURE NUMBERS	H-17-J
DETAILER	R. Dickey		H-17-L

DRAWING NUMBER B 5 OF 5 DRAWINGS

REVISION DATES		(PRELIMINARY STAGE ONLY)				
6/85	9/85					

BRT22

INITIAL	DATE			
DESIGNED BY	M.E.P.	2-86	CHECKED BY	K.D.H. 3-86
CHECKED BY	S.C.	3-86	QUANTITIES BY	R.A.D. 3-86
DETAILED BY	R.A.D.	2-86	CHECKED BY	M.E.P. 3-86

NO number OL 85 16:56:13 DUA1:(DRAW.STDS.MSTDS) BRT22