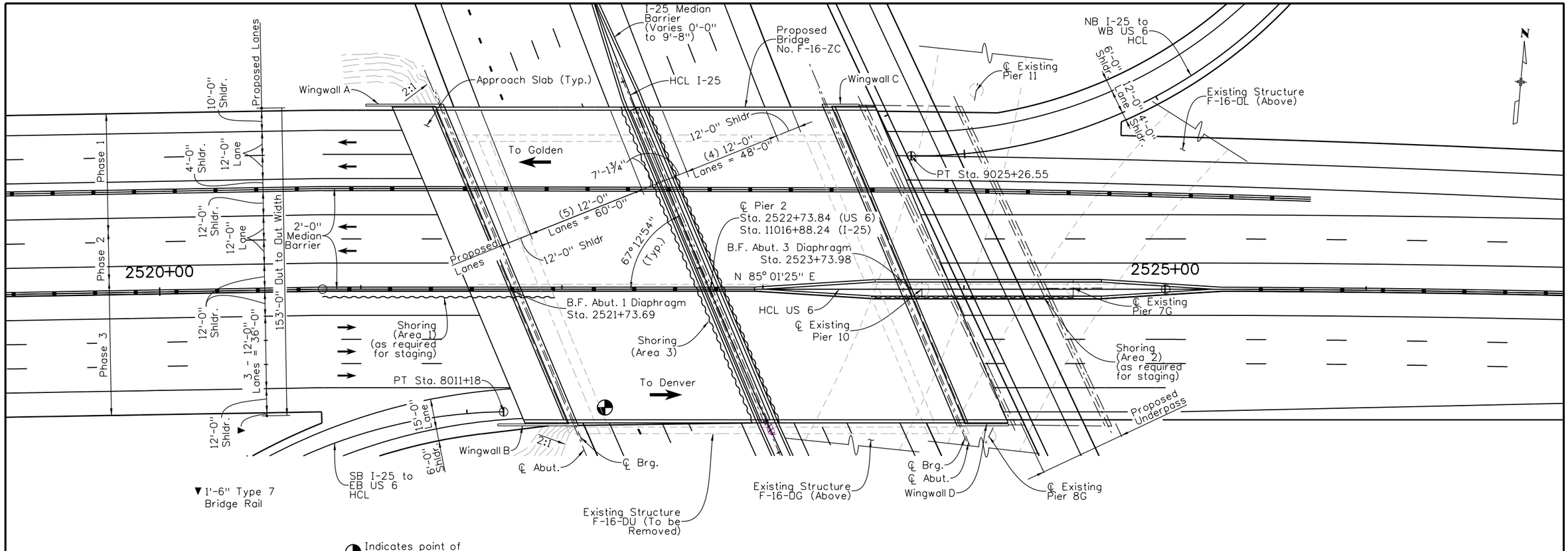

PLAN

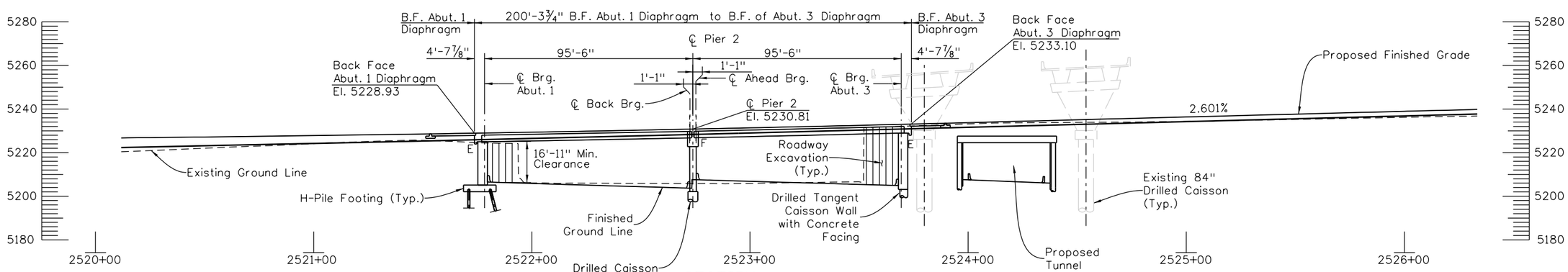

SECTION

(Taken at Horizontal Control Line)
Elevations are at Finished Grade.

NOTE:

1. See Roadway Plans for phasing requirements

Print Date: 9/19/2012	Sheet Revisions	Colorado Department of Transportation	DRAFT
File Name: 18192BRDG_US6_I25 GENERAL LAYOUT.dgn	Date: / Comments / Init.	8833 South Wadsworth Court, Littleton, CO 80128, Phone: 303-972-9112 FAX: 303-972-9114	Date: 09-19-12
Horiz. Scale: 1:50 Vert. Scale: As Noted	R-X	Region 6 MDP	Void:
Unit Information Unit Leader Initials			

US 6 OVER I-25 GENERAL LAYOUT			Project No./Code
Designer: H. REED	Structure Numbers	F-16-ZC	US 6 BRIDGES DESIGN BUILD PROJECT
Detailer: H. REED			18838
Sheet Subset: BRIDGE	Subset Sheets: of XXX		Sheet Number

kbrubaker 10:09:29 AM P:\CDOT\Region 6\US 6 Bridges\18192\Bridge\Drawings\18192BRDG_US6_I25 GENERAL LAYOUT.dgn

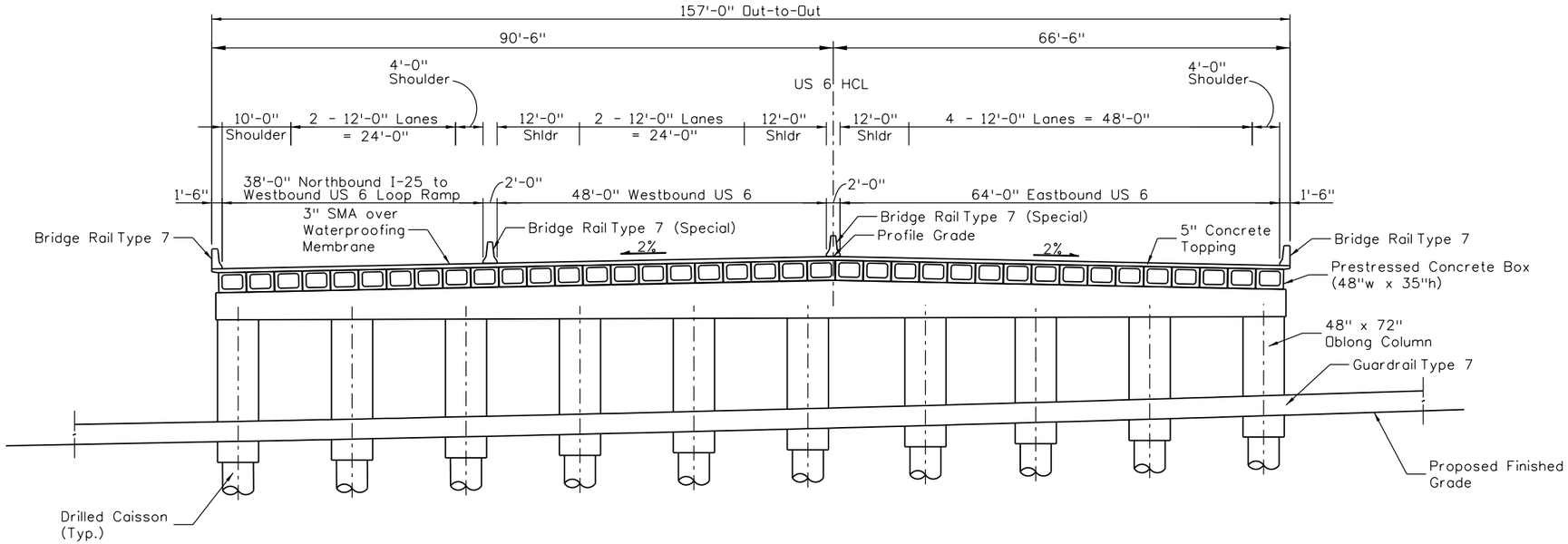

TYPICAL SECTION

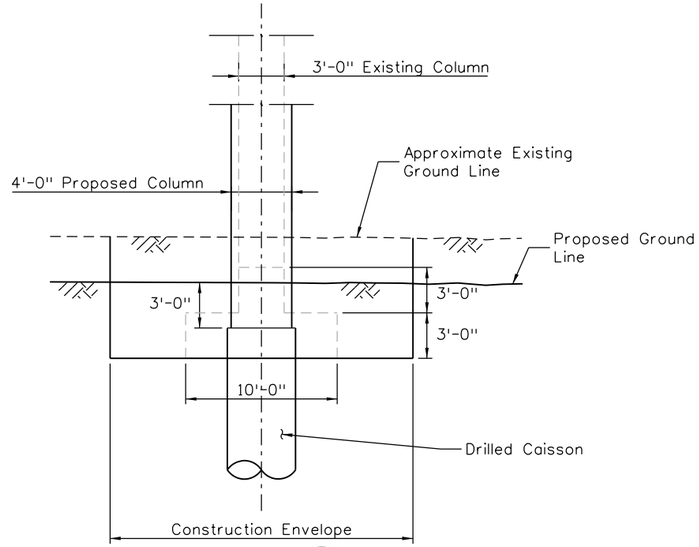

SECTION A

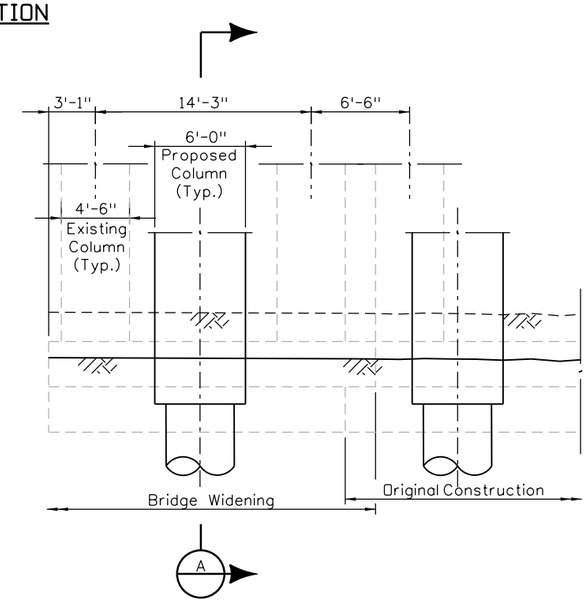

PIER COLUMN/FOOTING DETAIL

Print Date: 9/19/2012	Sheet Revisions			
File Name: 18192BRDG_US6_I25 TYPICAL SECTION.dgn	Date:	Comments	Init.	
Horiz. Scale: 1:20 Vert. Scale: As Noted	R-X			
Unit Information Unit Leader Initials				

Colorado Department of Transportation
8833 South Wadsworth Court
Littleton, CO 80128
Phone: 303-972-9112 FAX: 303-972-9114
Region 6 MDP

DRAFT
Date: 09-19-12
Void:

US 6 OVER I-25
TYPICAL SECTION

Designer:	H. REED	Structure Numbers	F-16-DU
Detailer:	H. REED		
Sheet Subset:	BRIDGE	Subset Sheets:	of

Project No./Code
US 6 BRIDGES DESIGN BUILD PROJECT
18838
Sheet Number

kbrubaker 10:09:31 AM P:\CDOT\Region 6\US 6 Bridges\18192\Bridge\Drawings\18192BRDG_US6_I25 TYPICAL SECTION.dgn

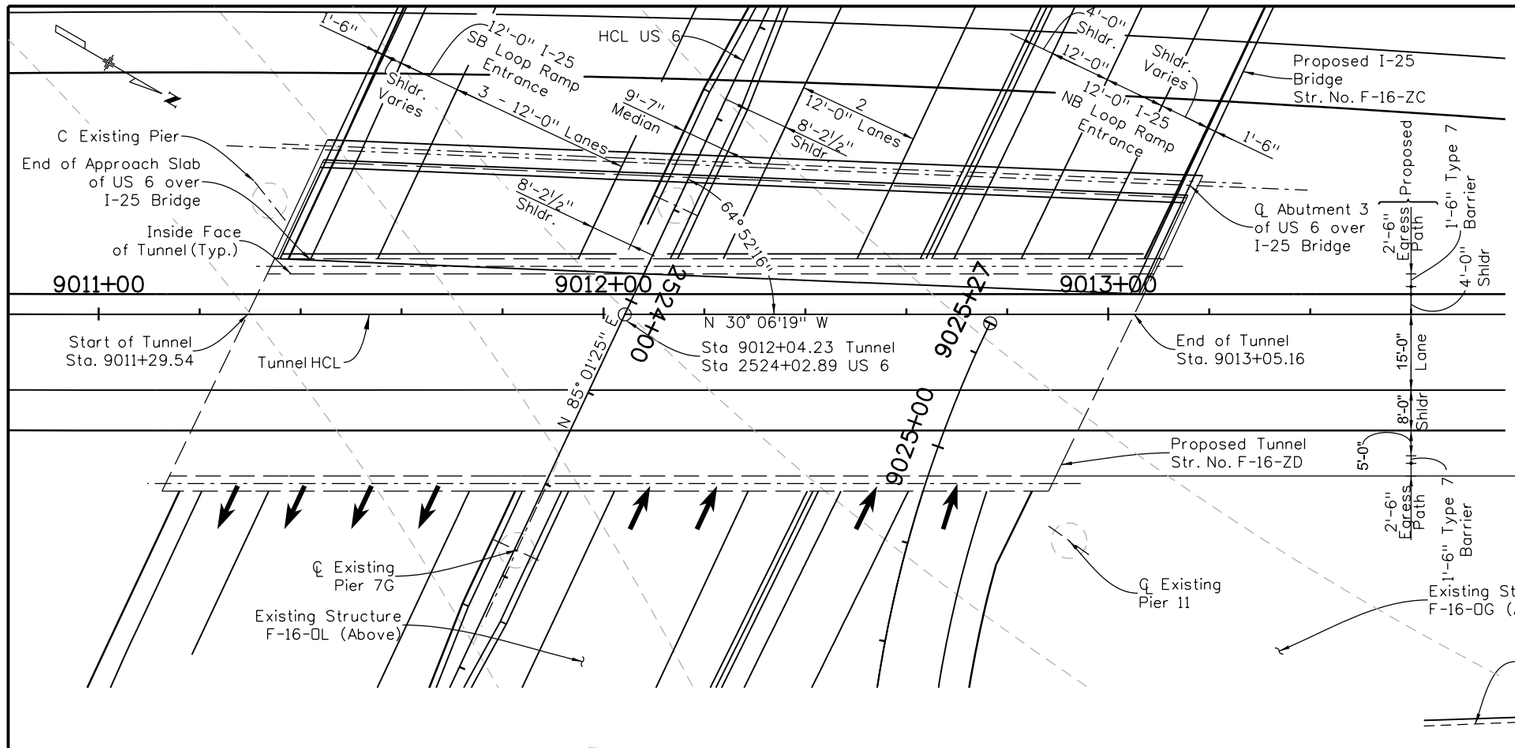

PLAN

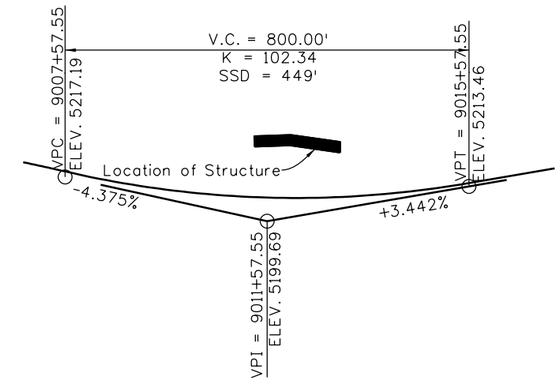

PROFILE GRADE

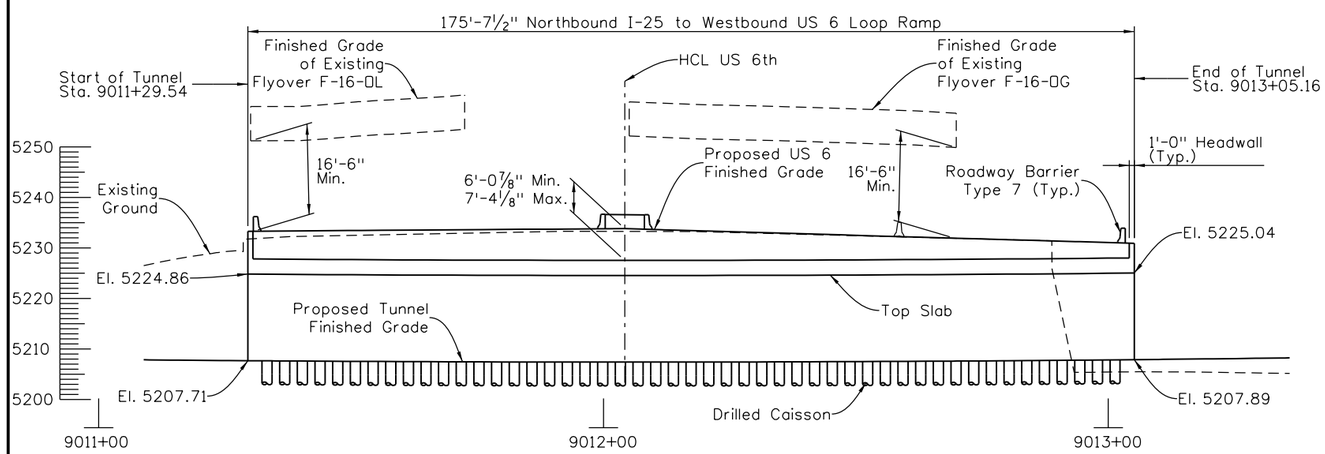

SECTION
TAKEN AT TUNNEL HCL

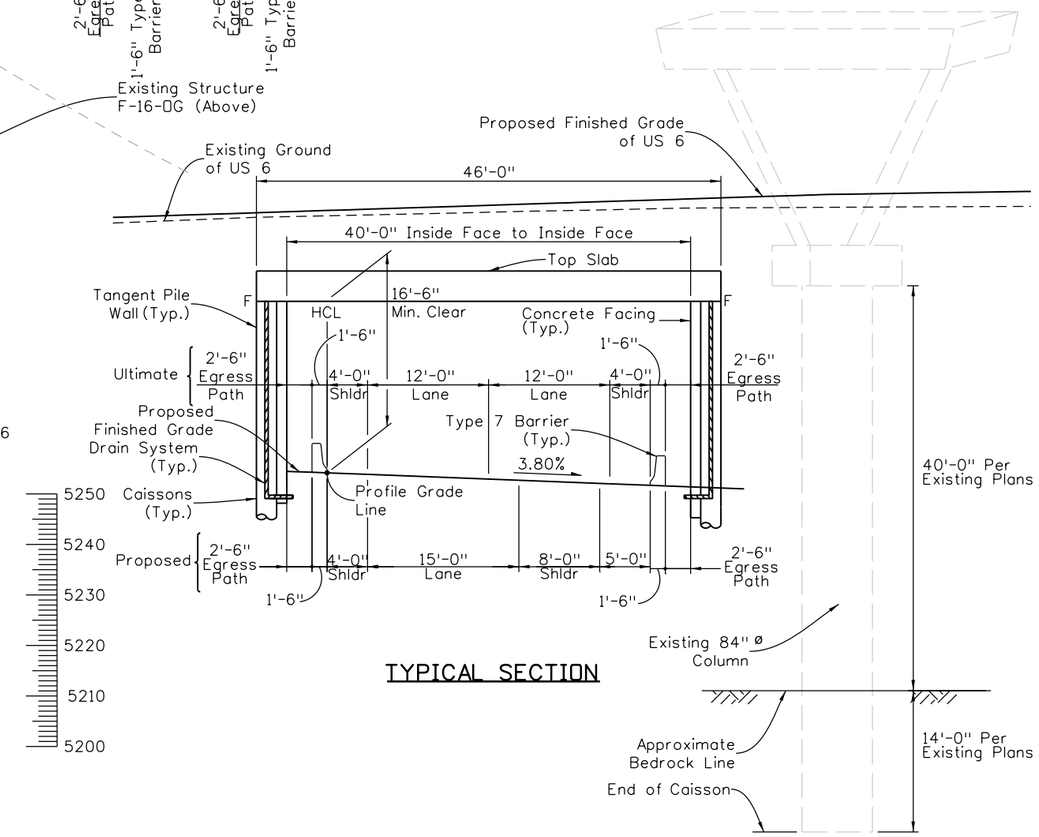

TYPICAL SECTION

Print Date: 9/19/2012		Sheet Revisions			
File Name: 18192BRDG_US6_TUNNEL GENERAL LAYOUT.dgn	R-X	Date:	Comments	Init.	
Horiz. Scale: 1:30 Vert. Scale: As Noted					
Unit Information Unit Leader Initials					

Colorado Department of Transportation
8833 South Wadsworth Court
Littleton, CO 80128
Phone: 303-972-9112 FAX: 303-972-9114
Region 6 MDP

DRAFT
Date: 09-19-12
Void:

NB I-25 TO WB US 6 TUNNEL GENERAL LAYOUT/TYP. SECTION

Designer:	H. REED	Structure Numbers	F-16-ZD
Detailer:	H. REED		
Sheet Subset:		Subset Sheets:	of

Project No./Code
US 6 BRIDGES DESIGN BUILD PROJECT
18838
Sheet Number

kbrubaker 10:09:33 AM P:\CDOT\Region 6\US 6 Bridges\18192\Bridge\Drawings\18192BRDG_US6_TUNNEL GENERAL LAYOUT.dgn

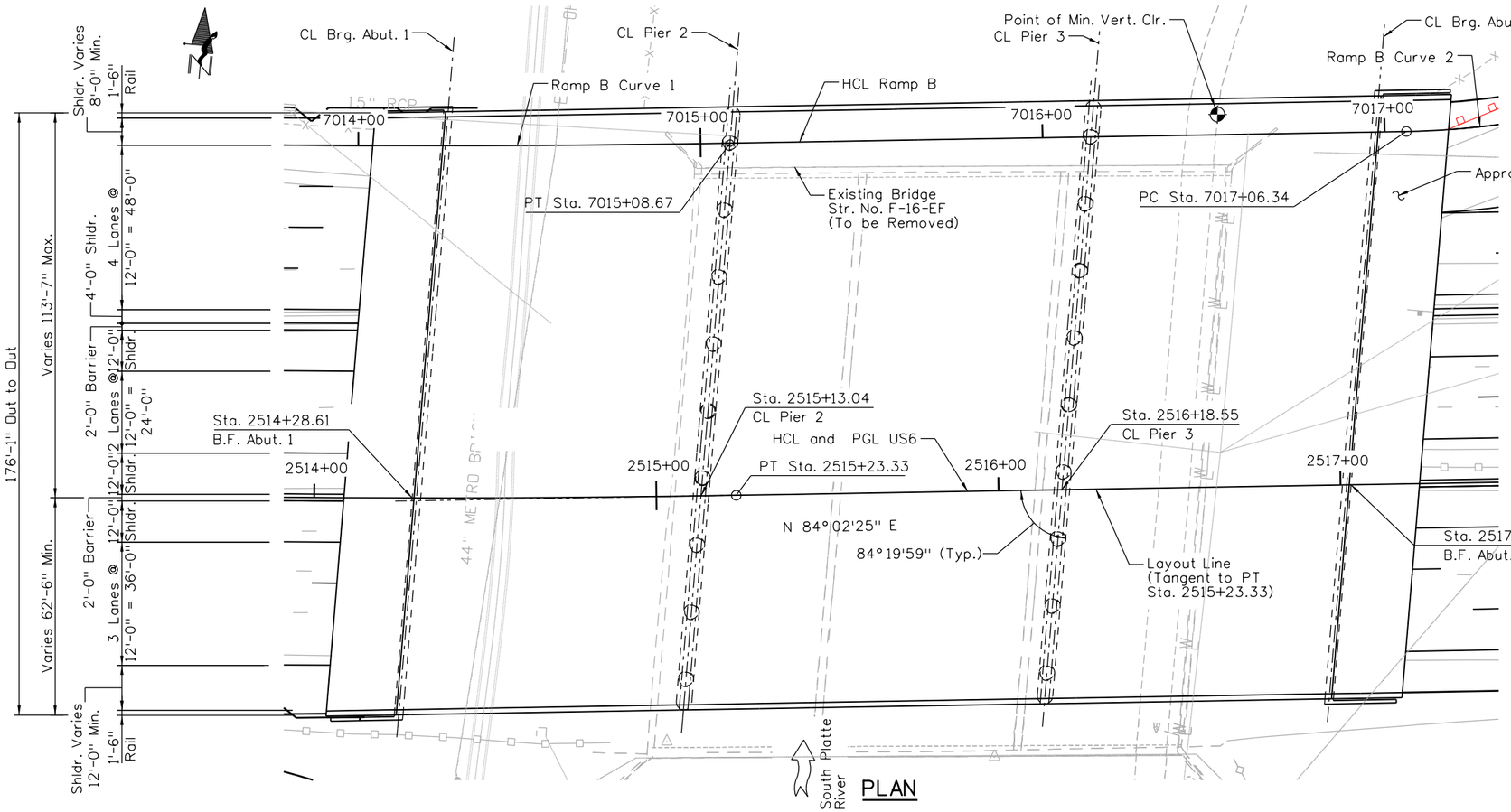

PLAN

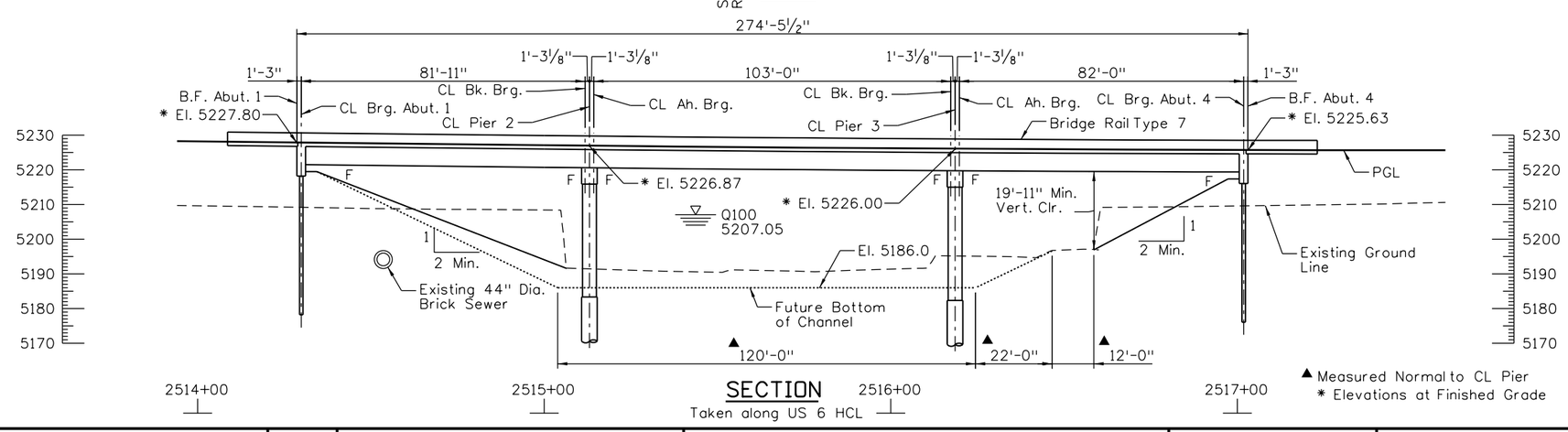

SECTION

Taken along US 6 HCL

▲ Measured Normal to CL Pier
* Elevations at Finished Grade

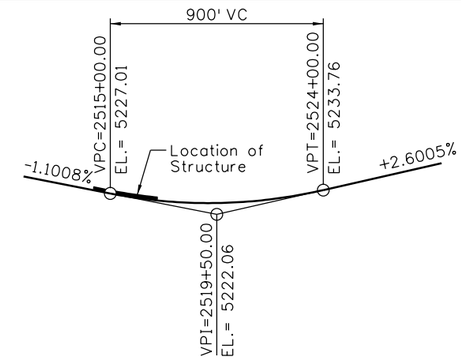

US 6 PROFILE GRADE

RAMP B CURVE 1 DATA

P.I. Sta. = 7012+10.70
Δ = 6° 42'31" (LT)
D = 1° 07'28"
L = 596.62'
T = 298.65'
R = 5095.61'
P.C. Sta. = 7009+12.05
P.T. Sta. = 7015+08.67

RAMP B CURVE 2 DATA

P.I. Sta. = 7018+73.61
Δ = 71° 49'07" (LT)
D = 24° 48'12"
L = 289.55'
T = 167.27'
R = 231.00'
P.C. Sta. = 7017+06.34
P.R.C. Sta. = 7019+95.89

US 6 CURVE DATA

P.I. Sta. = 2510+73.04
Δ = 9° 57'03" (LT)
D = 1° 06'08"
L = 902.86'
T = 452.57'
R = 5198.61'
P.C. Sta. = 2506+20.47
P.T. Sta. = 2515+23.33

Print Date: 9/19/2012	Sheet Revisions	Colorado Department of Transportation	DRAFT	US 6 OVER SOUTH PLATTE RIVER GENERAL LAYOUT	Project No./Code
File Name: 18192_PlatteGlt01.dgn	Date: / Comments / Init.	8833 South Wadsworth Court, Littleton, CO 80128, Phone: 303-972-9112 FAX: 303-972-9114			US 6 BRIDGES DESIGN BUILD PROJECT
Horiz. Scale: 1:40 Vert. Scale: As Noted	R-X		Date: 09-19-12	Designer: / Structure Numbers	18838
Unit Information Unit Leader Initials		Region 6 MDP	Void:	Detailer:	Sheet Number
				Sheet Subset: / Subset Sheets: of	

kbrubaker 10:09:36 AM P:\CDOT\Region 6\US 6 Bridges\18838\Bridge\Drawings\18192_PlatteGlt01.dgn
9/19/2012

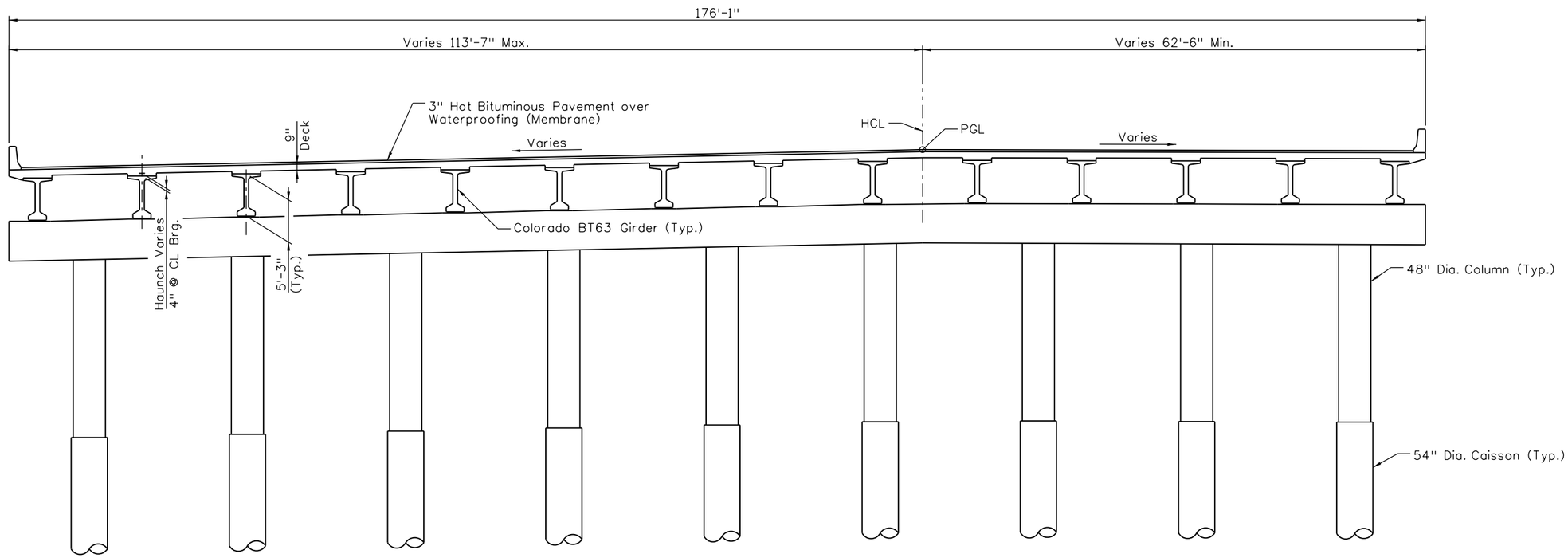

TYPICAL SECTION

Print Date: 9/19/2012	Sheet Revisions			Colorado Department of Transportation	DRAFT
File Name: 18192_PlatteTyp01.dgn	Date:	Comments	Init.	8833 South Wadsworth Court Littleton, CO 80128 Phone: 303-972-9112 FAX: 303-972-9114	
Horiz. Scale: 1:15 Vert. Scale: As Noted	R-X			Region 6 MDP	Date: 09-19-12
Unit Information Unit Leader Initials					Void:

US 6 OVER SOUTH PLATTE RIVER
TYPICAL SECTION

Designer:		Structure Numbers	
Detailer:			
Sheet Subset:		Subset Sheets:	of

Project No./Code

US 6 BRIDGES
DESIGN BUILD PROJECT

18838

Sheet Number

kbrubaker 10:09:38 AM P:\CDOT\Region 6\US 6 Bridges\18838\Bridge\Drawings\18192_PlatteTyp01.dgn
9/19/2012

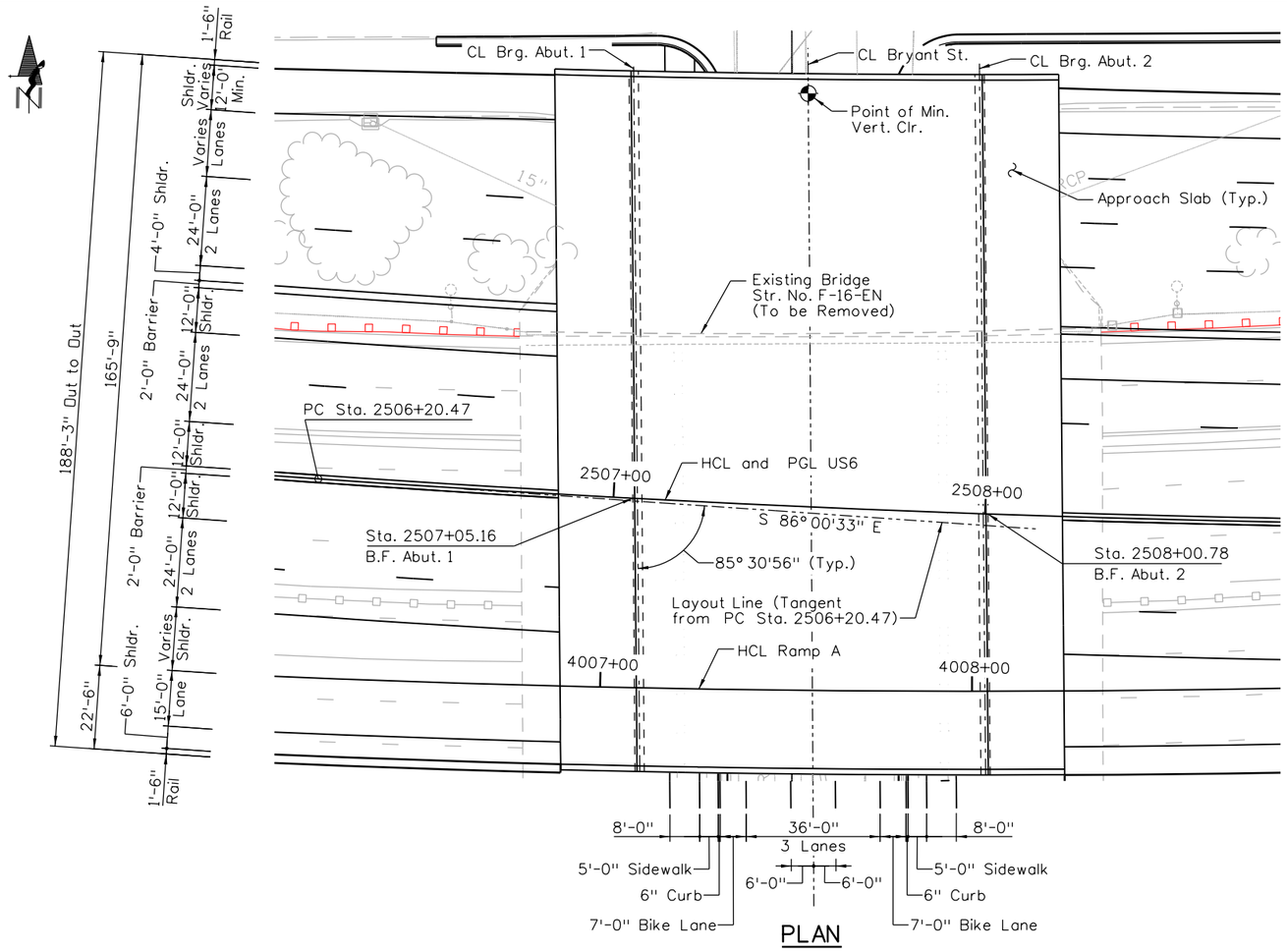

PLAN

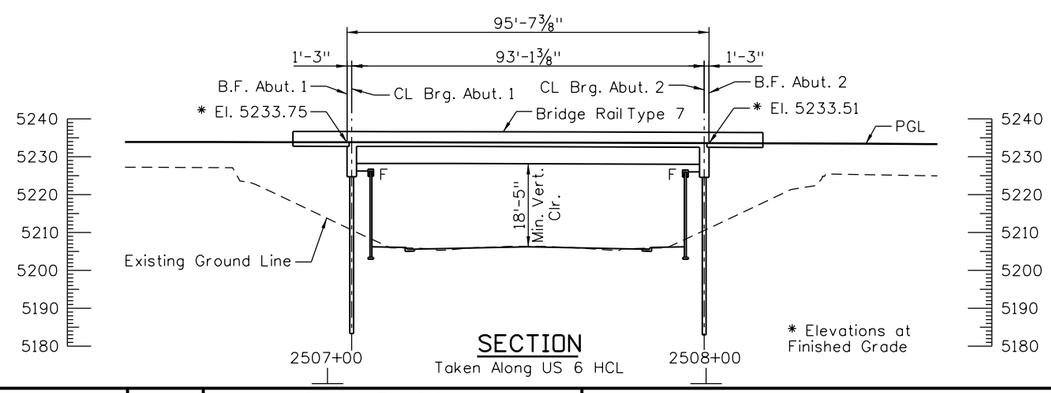

SECTION
Taken Along US 6 HCL

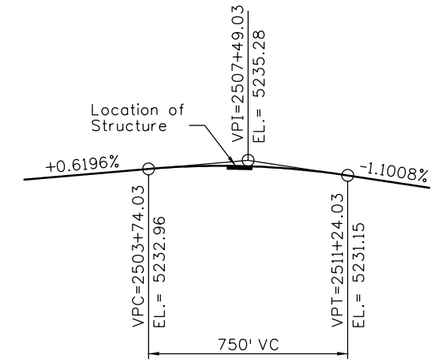

US 6 PROFILE GRADE

US 6 CURVE DATA

P.I. Sta. = 2510+73.04
Δ = 9° 57'03" (LT)
D = 1° 06'08"
L = 902.86'
T = 452.57'
R = 5198.61'
P.C. Sta. = 2506+20.47
P.T. Sta. = 2515+23.33

RAMP A CURVE DATA

P.I. Sta. = 4007+29.36
Δ = 6° 07'27" (LT)
D = 1° 18'09"
L = 470.14'
T = 235.29'
R = 4398.46'
P.C. Sta. = 4004+94.07
P.T. Sta. = 4009+64.20

Print Date: 9/19/2012
File Name: 18192_BryantGlt01.dgn
Horiz. Scale: 1:40 Vert. Scale: As Noted
Unit Information Unit Leader Initials

R-X

Sheet Revisions		
Date:	Comments	Init.

Colorado Department of Transportation
DOT
DEPARTMENT OF TRANSPORTATION
8833 South Wadsworth Court
Littleton, CO 80128
Phone: 303-972-9112 FAX: 303-972-9114
Region 6 MDP

DRAFT
Date: 09-19-12
Void:

US 6 OVER BRYANT ST
GENERAL LAYOUT

Designer:
Detailer:
Sheet Subset:
Structure Numbers
Subset Sheets: of

Project No./Code
US 6 BRIDGES
DESIGN BUILD PROJECT
18838
Sheet Number

kbrubaker 10:09:41 AM P:\CDOT\Region 6\US 6 Bridges\18838\Bridge\Drawings\18192_BryantGlt01.dgn
9/19/2012

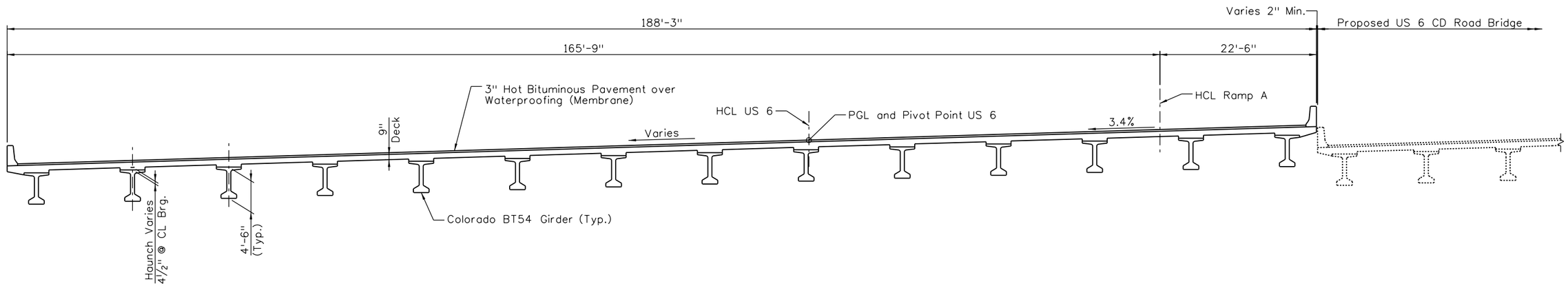

TYPICAL SECTION

Print Date: 9/19/2012		Sheet Revisions			Colorado Department of Transportation	DRAFT	US 6 OVER BRYANT ST TYPICAL SECTION	Project No./Code
File Name: 18192_BryantTyp01.dgn		Date:	Comments	Init.	8833 South Wadsworth Court Littleton, CO 80128 Phone: 303-972-9112 FAX: 303-972-9114			US 6 BRIDGES DESIGN BUILD PROJECT
Horiz. Scale: 1:15 Vert. Scale: As Noted	R-X					Date: 09-19-12	Designer: / Structure Numbers	18838
Unit Information Unit Leader Initials					Region 6 MDP	Void:	Detailer: / Sheet Subset: / Subset Sheets: of	Sheet Number

kbrubaker 10:09:43 AM P:\CDOT\Region 6\US 6 Bridges\18838\Bridge\Drawings\18192_BryantTyp01.dgn
9/19/2012

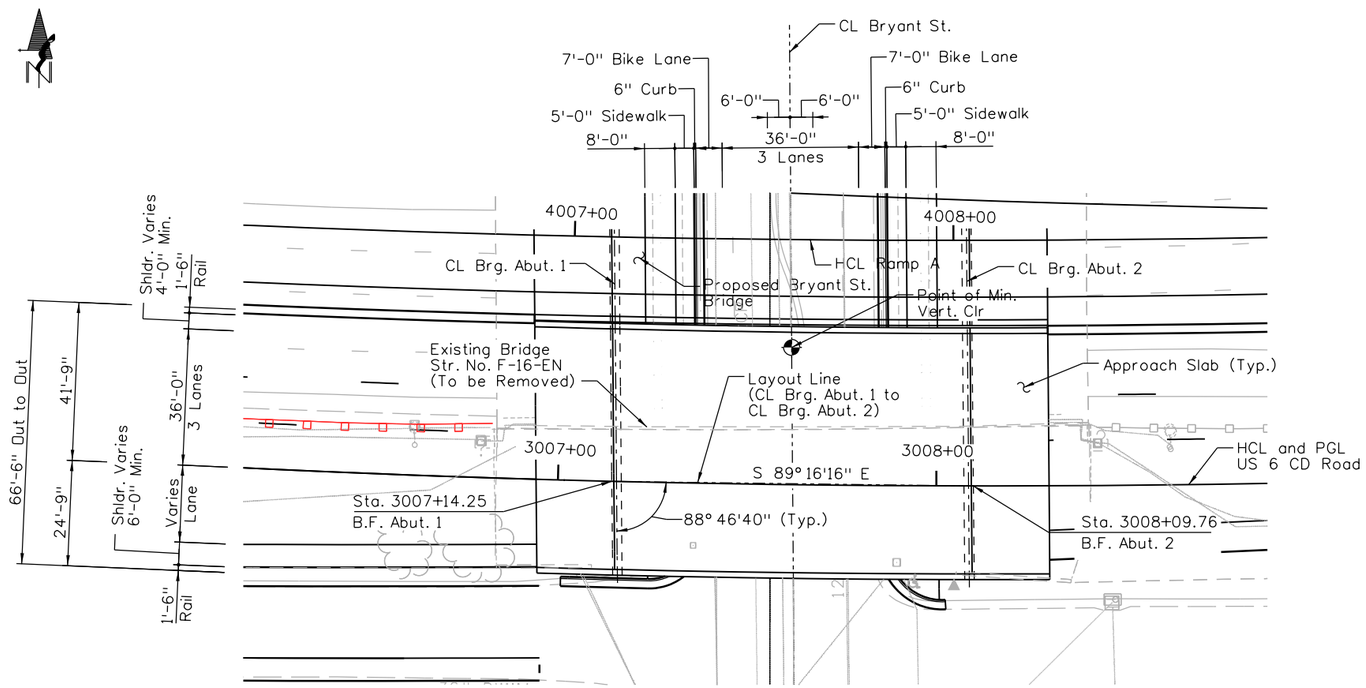

PLAN

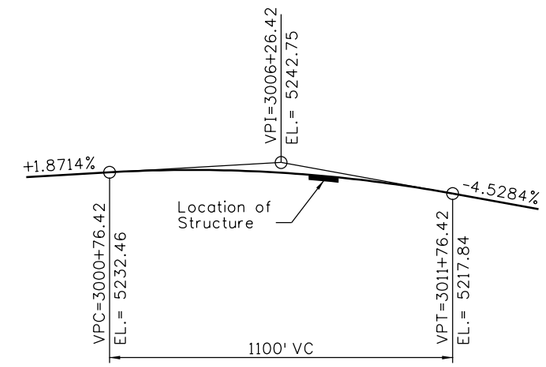

PROFILE GRADE

US 6 CD ROAD CURVE DATA

P.I. Sta. = 3007+18.29
Δ = 5°16'49" (LT)
D = 1°25'06"
L = 372.33'
T = 186.30'
R = 4040.00'
P.C. Sta. = 3005+31.99
P.T. Sta. = 3009+04.32

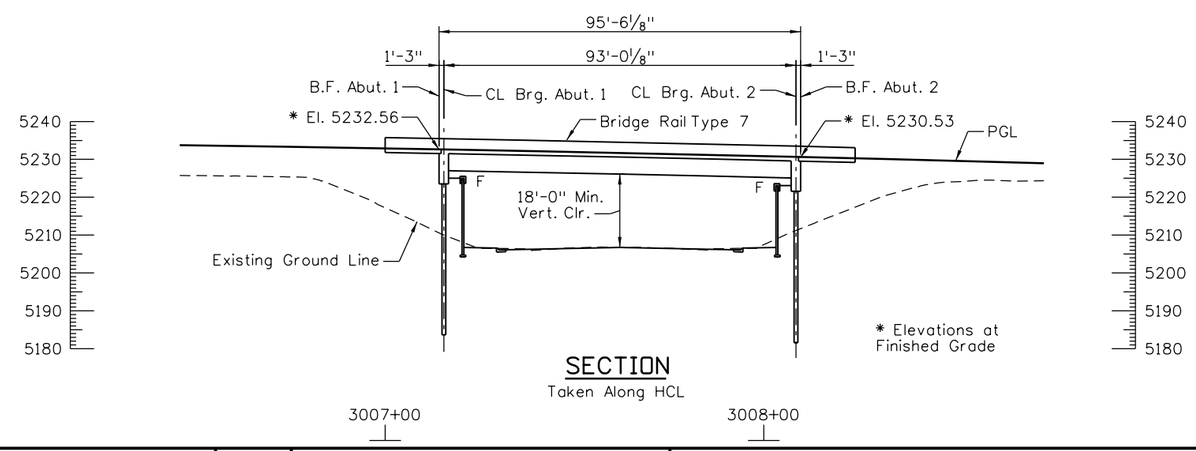

SECTION
Taken Along HCL

Print Date: 9/19/2012		Sheet Revisions			Colorado Department of Transportation	As Constructed	US 6 CD ROAD OVER BRYANT ST GENERAL LAYOUT	Project No./Code
File Name: 18192_BryantCDGlt01.dgn		Date:	Comments	Init.		No Revisions:		Project Number
Horiz. Scale: 1:40 Vert. Scale: As Noted	R-X				8833 South Wadsworth Court Littleton, CO 80128 Phone: 303-972-9112 FAX: 303-972-9114	Revised:	Designer: / Structure Numbers	18192
Unit Information Unit Leader Initials					Region 6 HC	Void:	Detailer:	Sheet Number
							Sheet Subset: / Subset Sheets: of	

kbrubaker 10:09:46 AM P:\CDOT\Region 6\US 6 Bridges\18838\Bridge\Drawings\18192_BryantCDGlt01.dgn
9/19/2012

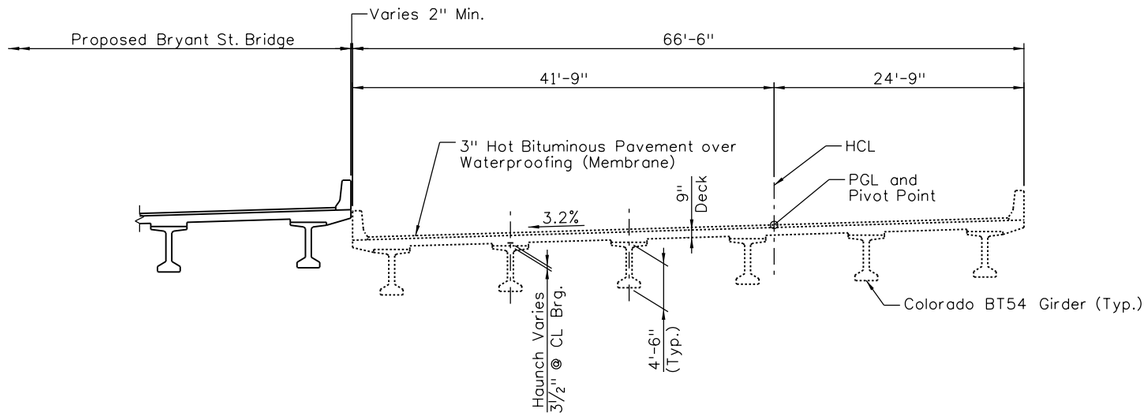

TYPICAL SECTION

Print Date: 9/19/2012		Sheet Revisions			
File Name: 18192_BryantCDTyp01.dgn		Date:	Comments	Init.	
Horiz. Scale: 1:15 Vert. Scale: As Noted	R-X				
Unit Information Unit Leader Initials					

Colorado Department of Transportation
8833 South Wadsworth Court
Littleton, CO 80128
Phone: 303-972-9112 FAX: 303-972-9114
Region 6 HC

As Constructed
No Revisions:
Revised:
Void:

US 6 CD ROAD OVER BRYANT ST
TYPICAL SECTION

Designer:
Detailer:
Sheet Subset:
Structure Numbers
Subset Sheets: of

Project No./Code
Project Number
18192
Sheet Number

kbrubaker 10:09:48 AM P:\CDOT\Region 6\US 6 Bridges\18838\Bridge\Drawings\18192_BryantCDTyp01.dgn
9/19/2012

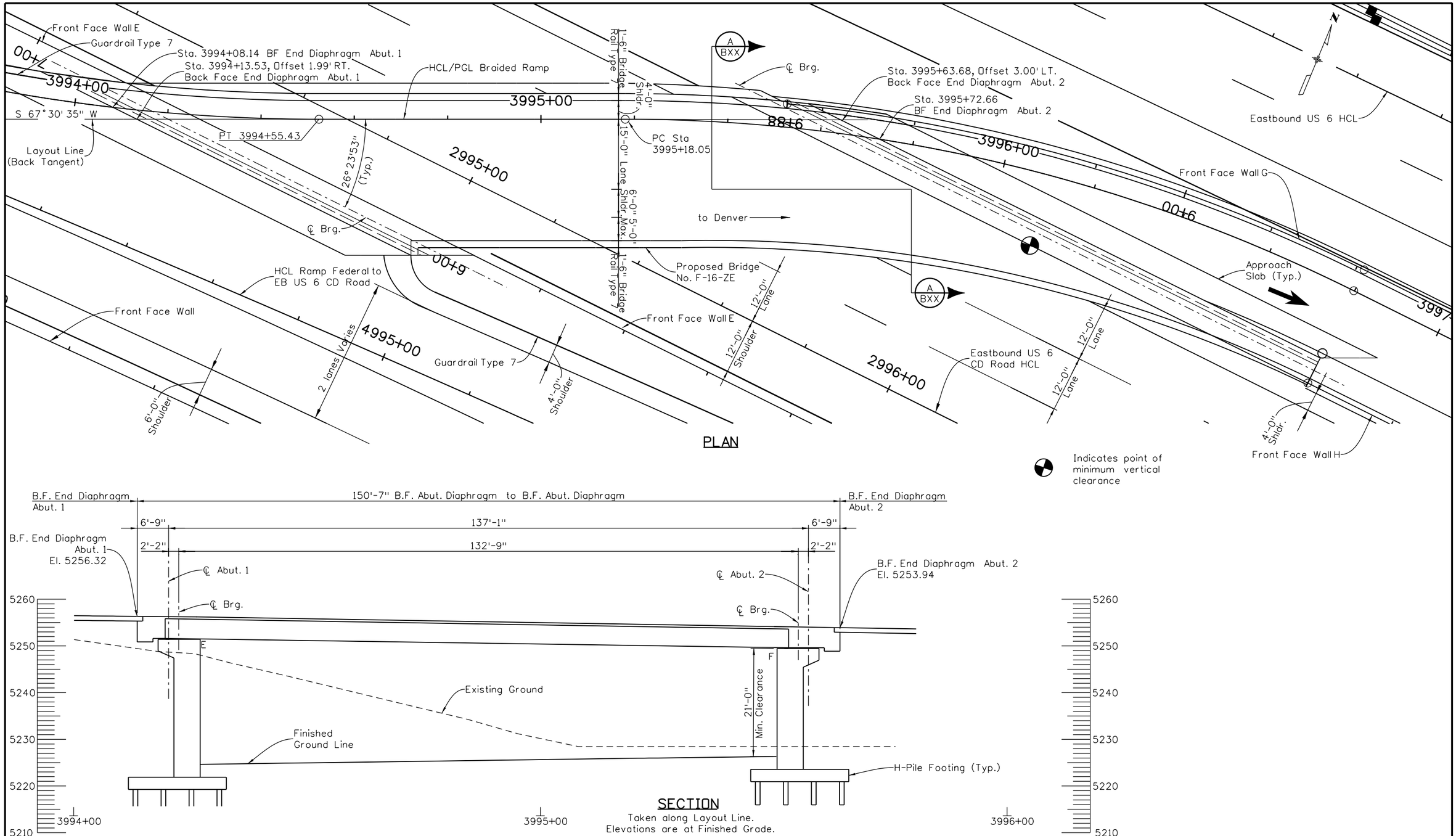

Print Date: 9/19/2012	LAYOUT.dgn	Sheet Revisions		
File Name: 18192BRDG_US6_BRAIDED RAMP GENERAL	R-X	Date:	Comments	Init.
Horiz. Scale: 1:20 Vert. Scale: As Noted				
Unit Information Unit Leader Initials				

Colorado Department of Transportation
8833 South Wadsworth Court
Littleton, CO 80128
Phone: 303-972-9112 FAX: 303-972-9114
Region 6 MDP

DRAFT
Date: 09-19-12
Void:

BRAIDED RAMP OVER EB CD ROAD
GENERAL LAYOUT

Designer:	H. REED	Structure Numbers	F-16-ZE
Detailer:	H. REED		
Sheet Subset:	BRIDGE	Subset Sheets:	of

Project No./Code
US 6 BRIDGES
DESIGN BUILD PROJECT
18838
Sheet Number

kbrubaker 10:09:50 AM P:\CDOT\Region 6\US 6 Bridges\18192\Bridge\Drawings\18192BRDG_US6_BRAIDED RAMP GENERAL LAYOUT.dgn

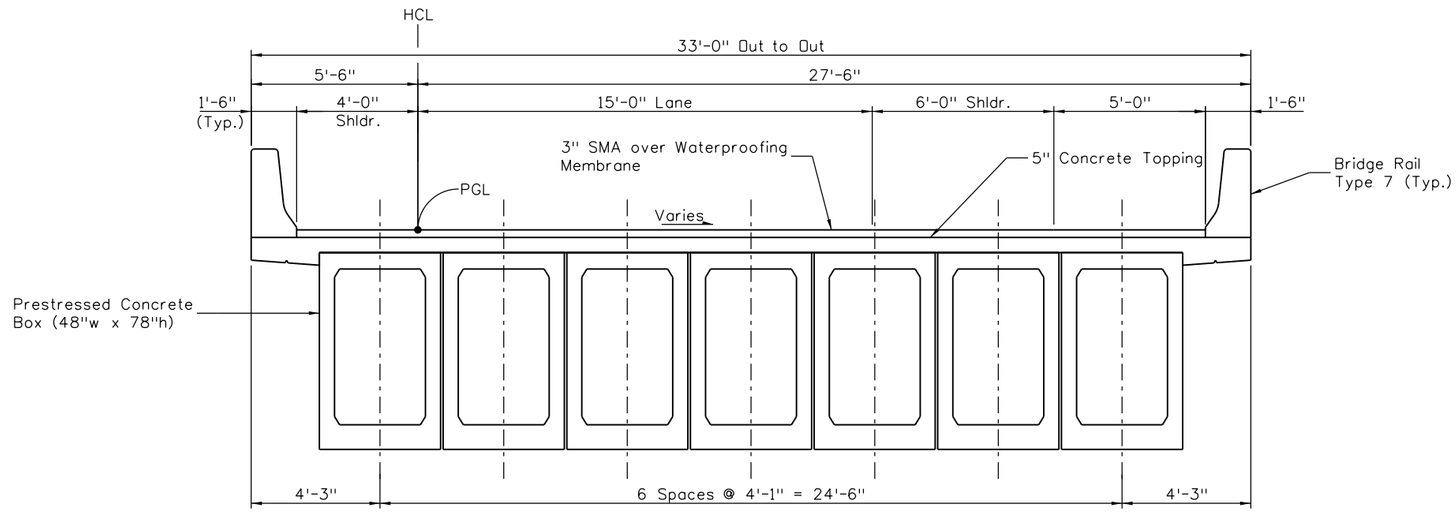

TYPICAL SECTION

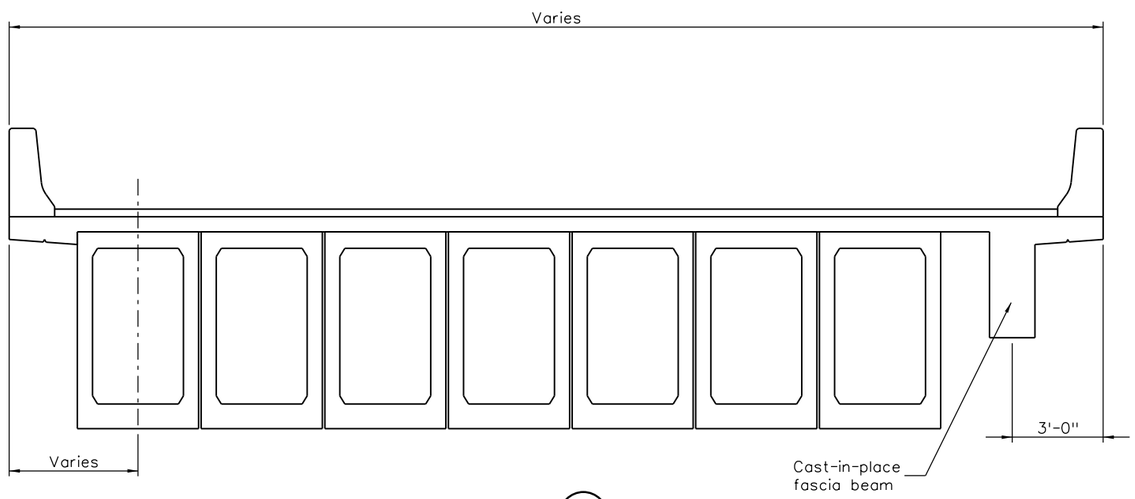

SECTION A

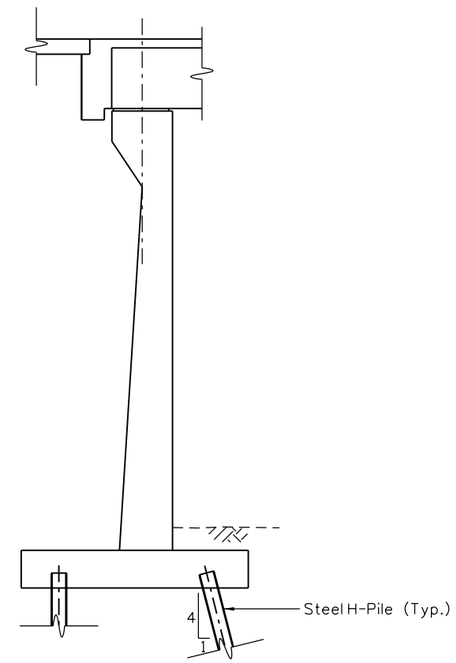

TYPICAL ABUTMENT SECTION

Print Date: 9/19/2012	SECTION.dgn	Sheet Revisions			Colorado Department of Transportation
File Name: 18192BRDG_US6_BRAIDED RAMP TYPICAL	R-X	Date:	Comments	Init.	8833 South Wadsworth Court
Horiz. Scale: 1:5 Vert. Scale: As Noted					Littleton, CO 80128
Unit Information Unit Leader Initials					Phone: 303-972-9112 FAX: 303-972-9114
					Region 6 MDP

DRAFT

Date: 09-19-12

Void:

BRAIDED RAMP OVER EB CD ROAD
TYPICAL SECTIONS

Designer:	H. REED	Structure Numbers	F-16-ZE
Detailer:	H. REED		
Sheet Subset:	BRIDGE	Subset Sheets:	of

Project No./Code

US 6 BRIDGES
DESIGN BUILD PROJECT

18838

Sheet Number

kbrubaker 10:09:51 AM P:\CDOT\Region 6\US 6 Bridges\18192\Bridge\Drawings\18192BRDG_US6_BRAIDED RAMP TYPICAL SECTION.dgn

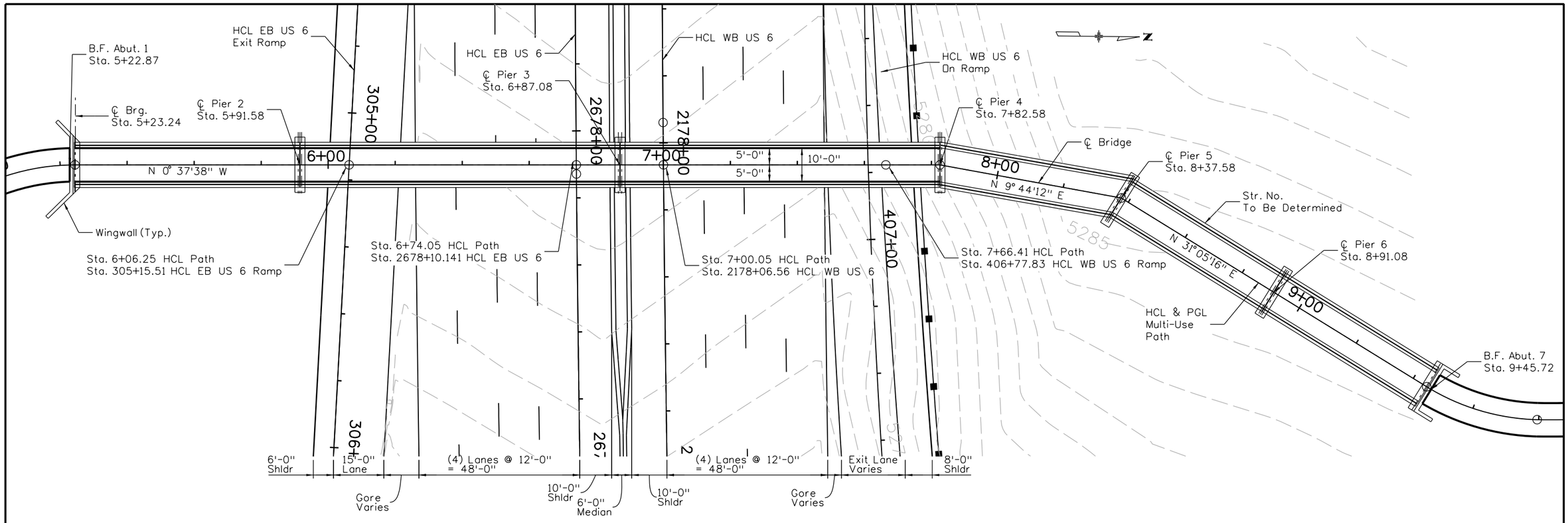

SECTION

(Taken along HCL Bridge)
(Elevations shown are at top of deck)

NOTE:

1. Elevations are at finished grade.

Print Date: 9/19/2012		Sheet Revisions		
File Name: 18192BRDG_US6_PEDESTRIAN GENERAL LAYOUT.dgn	R-X	Date:	Comments	Init.
Horiz. Scale: 1:30 Vert. Scale: As Noted				
Unit Information Unit Leader Initials				

Colorado Department of Transportation
8833 South Wadsworth Court
Littleton, CO 80128
Phone: 303-972-9112 FAX: 303-972-9114
Region 6 MDP

DRAFT

Date: 09-19-12
Void:

MULTI-USE PATH
GENERAL LAYOUT

Designer:	C. TEPEN	Structure Numbers	TBD
Detailer:	H. REED		
Sheet Subset:		Subset Sheets:	of

Project No./Code
US 6 BRIDGES
DESIGN BUILD PROJECT
18838
Sheet Number

kbrubaker 10:09:54 AM P:\CDOT\Region 6\US 6 Bridges\18192\Bridge\Drawings\18192BRDG_US6_PEDESTRIAN GENERAL LAYOUT.dgn

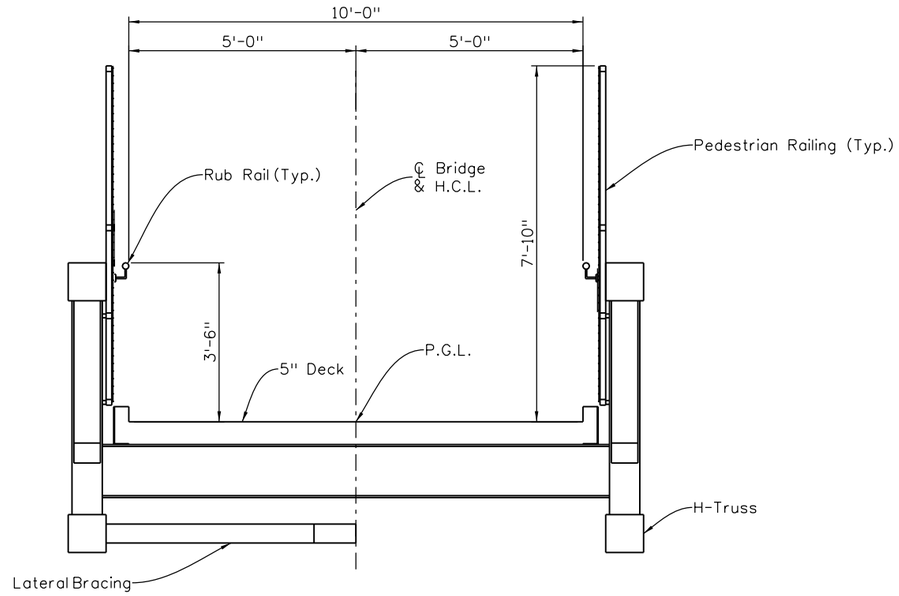

TYPICAL SECTION

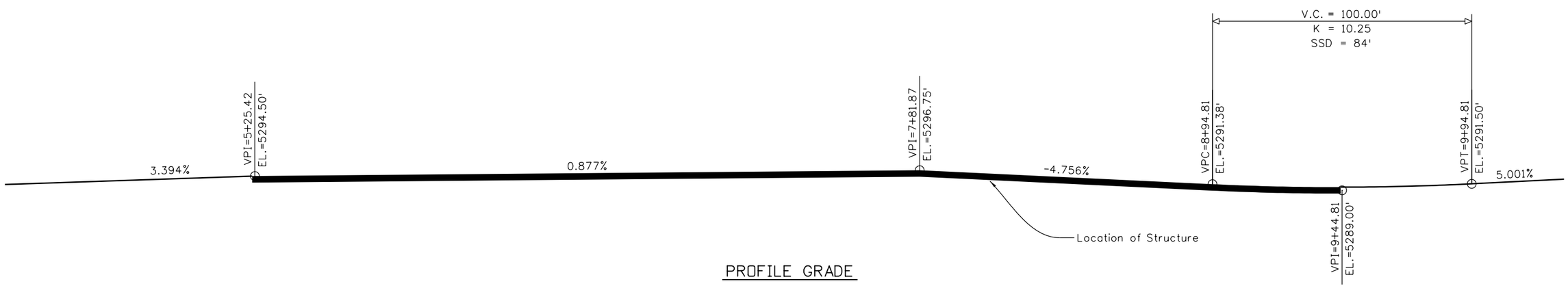

PROFILE GRADE

Print Date: 9/19/2012	SECTION.dgn	Sheet Revisions	Colorado Department of Transportation	DRAFT	US 6 BRIDGES PEDESTRIAN BRIDGE TYPICAL SECTION	Project No./Code
File Name: 18192BRDG_PEDESTRIAN BRIDGE TYPICAL	R-X	Date: / Comments / Init.	DOT 8833 South Wadsworth Court Littleton, CO 80128 Phone: 303-972-9112 FAX: 303-972-9114	Date: 09-19-12	Designer: C. TEPEN / Structure Numbers: X-XX-XX	US 6 BRIDGES DESIGN BUILD PROJECT
Horiz. Scale: 1:40 Vert. Scale: As Noted			Region 6 MDP	Void:	Detailer: K. BRUBAKER	18838
Unit Information Unit Leader Initials					Sheet Subset: BRIDGE / Subset Sheets: XXX of XXX	Sheet Number

kbrubaker 10:09:55 AM P:\CDOT\Region 6\US 6 Bridges\18192\Bridge\Drawings\18192BRDG_PEDESTRIAN BRIDGE TYPICAL SECTION.dgn