FEDERAL ROAD REGION NO.	DISTRICT	PROJ. NO.	SHEET NO.	TOTAL SHEETS
VIII	COLORADO	I25-2(91)209	70	

REVISIONS		

AS CONSTRUCTED
NO REVISIONS
Date Completed ~~6-28-74~~

GENERAL NOTES

ALL WORK SHALL BE DONE ACCORDING TO THE STANDARD SPECIFICATIONS OF THE DIVISION OF HIGHWAYS, STATE OF COLORADO, APPLICABLE TO THE PROJECT.

USE GRADE 60 FOR ALL REINFORCING STEEL UNLESS OTHERWISE NOTED.

ALL CONCRETE SURFACES MARKED WITH THE SYMBOL f AS SHOWN ON DRAWING NO. B 4 SHALL RECEIVE A CLASS 2 SURFACE FINISH.

ALL CONCRETE CHAMFERS SHALL BE 3/4 INCH UNLESS OTHERWISE NOTED.

EXPANSION JOINT MATERIAL SHALL MEET A.A.S.H.O. SPECIFICATION M 213-65 UNLESS OTHERWISE NOTED.

SOUNDINGS AND DEPTH OF FOOTINGS ARE IN ACCORDANCE WITH THE BEST AVAILABLE DATA. WHEN DIFFERENT CONDITIONS ARE ENCOUNTERED, THE BRIDGE ENGINEER WILL INSPECT AND DETERMINE IF REDESIGN IS NECESSARY.

WHEN TREATED TIMBER PILING IS SHOWN ON THE PLANS, THE PRESERVATIVE FOR TREATMENT SHALL BE CREOSOTE OIL.

WHEN EXCAVATING FOR FOOTINGS, THE FINAL SIX INCHES IN DEPTH SHALL BE DONE BY HAND LABOR METHODS.

FOR DETAILS OF STRUCTURE EXCAVATION AND STRUCTURE BACKFILL, SEE STANDARD M-206-AA.

ALL STRUCTURAL STEEL NOT OTHERWISE NOTED SHALL BE A.A.S.H.O. SPECIFICATION M-183.

ALL STRUCTURAL STEEL NOT OTHERWISE NOTED SHALL BE PAINTED IN ACCORDANCE WITH SECTION 509 FOR (GREEN) PAINT.

ALL BOLTS SHALL BE 3/4" DIAMETER, HIGH STRENGTH, UNLESS OTHERWISE NOTED.

NO WELDING OF ANY KIND SHALL BE PERMITTED ON THE FLANGES OF STEEL GIRDERS UNLESS SPECIFICALLY CALLED FOR IN THE PLANS.

EACH REINFORCING BAR SHALL BE TAGGED WITH BAR DESIGNATION, STRUCTURE NUMBER, AND STATION OF THE PROJECT. THE FIRST DIGIT OR DIGITS: 4-11 OF THE BAR DESIGNATION INDICATES THE BAR SIZE; EXAMPLE: 406 = #4 BAR, 1103 = #11 BAR, ETC. ALL DIMENSIONS ON BAR BENDING DIAGRAMS ARE OUT TO OUT. DIMENSIONS FOR REINFORCING BARS NOT SHOWN AS CLEAR SHALL BE TO THE CENTERLINE OF THE BAR. IF, BY PERMISSION OF THE ENGINEER, PRIMARY BARS ARE SPLICED, THEY SHALL LAP A MINIMUM OF 40 DIAMETERS.

ALL REINFORCING BAR SPLICES SHOWN IN THE SUPERSTRUCTURE SHALL HAVE A MINIMUM LAP OF 40 DIAMETERS UNLESS OTHERWISE NOTED. WHERE SPLICES CONTAIN BARS OF DIFFERENT DIAMETERS, THE SPLICE LENGTH SHALL BE GOVERNED BY THE SMALLEST BAR.

THE FOLLOWING TABLE SHOWS THE MINIMUM 40 DIAMETER LAP FOR COMMON BAR SIZES:

BAR SIZE	#4	#5	#6	#7	#8	#9	#10	#11
LAP	1'-8"	2'-1"	2'-6"	2'-11"	3'-4"	3'-10"	4'-3"	4'-9"

E.F. = EACH FACE
N.F. = NEAR FACE
F.F. = FAR FACE
B.E.I. = BY EQUAL INCREMENTS

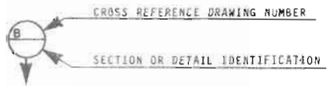

	INITIAL	DATE		INITIAL	DATE
DESIGNED BY	J.L.B.	9-71	CHECKED BY	EAH	3-72
CHECKED BY			QUANTITIES BY	MLR	3-72
DETAILED BY	M.L.R.	3-72	CHECKED BY	EAH	3-72

INDEX OF DRAWINGS

DWG. NO. B 1 GENERAL INFORMATION
DWG. NO. B 2 SUMMARY OF QUANTITIES
DWG. NO. B 3 GENERAL LAYOUT
DWG. NO. B 4 ELEVATIONS-DEAD LOAD DEFLECTION; SURFACE FINISH DETAILS
DWG. NO. B 5 BAR LIST
DWG. NO. B 6 BAR LIST
DWG. NO. B 7 CONSTRUCTION LAYOUT
DWG. NO. B 8 CONSTRUCTION LAYOUT
DWG. NO. B 9 FOOTING & PILING LAYOUT
DWG. NO. B 10 DETAILS-ABUTMENT 1, EAST SIDE WIDENING, MEDIAN
DWG. NO. B 11 DETAILS-ABUTMENT 1, WEST SIDE WIDENING
DWG. NO. B 12 DETAILS-ABUTMENT 4, EAST SIDE WIDENING, MEDIAN
DWG. NO. B 13 DETAILS-ABUTMENT 4, WEST SIDE WIDENING
DWG. NO. B 14 DETAILS-PIERS 2 & 3 EAST SIDE WIDENING F-16-EG MEDIAN WIDENING
DWG. NO. B 15 DETAILS-PIERS 2 & 3 WEST SIDE WIDENING F-16-EH
DWG. NO. B 16 FRAMING PLANS
DWG. NO. B 17 FRAMING PLAN WEST SIDE FIELD SPLICE DETAIL GIRDER DETAIL & BLOCKING DIAGRAM
DWG. NO. B 18 SUPERSTRUCTURE SECTIONS-MEDIAN BARRIER
DWG. NO. B 19 SUPERSTRUCTURE SECTION-DIAPHRAGM DETAILS
DWG. NO. B 20 SUPERSTRUCTURE REINFORCING
DWG. NO. B 21 SUPERSTRUCTURE REINFORCING
DWG. NO. B 22 EXPANSION DEVICE DETAILS
DWG. NO. B 23 BRIDGE RAIL TYPE 1
DWG. NO. B 24 BEARING DETAIL
DWG. NO. B 25 APPROACH SLABS ABUTMENT 1
DWG. NO. B 26 APPROACH SLABS ABUTMENT 4

BRIDGE DESCRIPTION

Widening of Existing Structures, 3-Spans (44'-0", 55'-0", 44'-0") Continuous Concrete Slab and I-Beam Bridges.
Over Colorado and Southern Railroad Spur
Roadway Width Varies See Details
Skew Varies See Details
1'-3" Curbs. Bridge Rail Type I
Median-Guard Rail Type 5

LOADING DATA

LIVELOAD: A.A.S.H.O. HS-20-44 OR INTERSTATE ALTERNATE.
DEADLOAD: ASSUMES 20 LBS. PER SQ. FT. ADDITIONAL WEARING SURFACE. NO PROVISION HAS BEEN MADE FOR ADDITIONAL OVERLAYS.

DESIGN DATA

A.A.S.H.O. UNIT STRESSES, EXCEPT AS NOTED.

REINFORCING STEEL:		Fs = 20,000 LBS. PER SQ. IN. FOR TRANSVERSE BARS IN ROADWAY SLAB ONLY.
		Fs = 24,000 LBS. PER SQ. IN.
STRUCTURAL STEEL:	A36	Fs = 20,000 LBS. PER SQ. IN.
	A572, GRADE 50	Fs = 27,000 LBS. PER SQ. IN.
CONCRETE:		Fc = 1,200 LBS. PER SQ. IN.
		n = 10

PAUL CHUVARSKY JR. REGISTERED 4687 PROFESSIONAL ENGINEER STATE OF COLORADO

Approved
P. Chuvarsky P.E. 6/8/72
Bridge Engineer Date

DIVISION OF HIGHWAYS

GENERAL INFORMATION

Station 286+69.301 to 288+16.480 Str. EG
Station 287+57.219 to 289+04.223 Str. EH
Near Denver Sec 9 T 4S R 68W
Designer J. L. Barber — Structure Number F-16-EG
Detailer M. L. Roseberry — Structure Number F-16-EH
Drawing Number B 1 of 26 Drawings

O (7-1-71)

AS CONSTRUCTED
WITH REVISIONS
Date Completed 6-28-74

FEDERAL ROAD REGION NO.	DISTRICT	PROJ. NO.	SHEET NO.	TOTAL SHEETS
VIII	COLORADO	I 25-2(91)209	71	

REVISIONS			
R-1	8-25-72	Revised quantities, added Item per C.O. # 04683	TCF

SUMMARY OF QUANTITIES

	Item No.	Description	Unit	Superstructure East	Superstructure West	Superstructure Med.	Abutment 1 East	Abutment 1 West	Abutment 1 Med.	Pier 2 East	Pier 2 West	Pier 2 Med.	Pier 3 East	Pier 3 West	Pier 3 Med.	Abutment 4 East	Abutment 4 West	Abutment 4 Med.	Total	
	202	Removal of Portions of Present Structure	ea.																2	
	206	Structure Excavation	Cu.Yd.				12	16	6	47	90	46	46	92	41	12	16	6	~~430~~	510
	206	Structure Backfill (class 2)	Cu.Yd.				7	11	5	41	80	39	40	84	34	8	11	5	~~365~~	442
	403	Hot Bituminous Pavement (Grading D X) (Haul & Asphalt)	Ton	14	23	21													58	
(1)	502	Steel Piling (10BP42)	Lin.Ft.				100	150	100							100	100	100	650	
(2)	509	Structural Steel (Galvanized)	Lb.	6607	6525	603													13,735	
	509	Structural Steel	Lb.	22816	66,276	39,467	85	253	168	184	553	369	184	553	369	174	520	347	~~136,160~~	132,318 R-1
(4)	509	Point Existing Structure	Ea.																+	2
	518	Waterstop (split) (6 inch)	Lin.Ft.				8	8								10	10		36	
	518	Bridge Expansion Device (Type 2)	Lin.Ft.													65.9	51.4	37.9	155.2	R-1
	601	Concrete Class A (Bridge)	Cu.Yd.				5.8	13.3	6.2	7.3	14.8	7.3	7.3	14.4	7.3	8.5	12.7	7.1	~~112~~	115.05
	601	Concrete Class D (Bridge)	Cu.Yd.	53.3	33.5	62.6				2.9	5.9	3.8	2.9	5.3	3.8				234	
	602	Reinforcing Steel	Lb.	16,596	30,802	21,423	476	1209	415	2092	5494	2789	2092	5161	2775	704	1234	509	~~93,771~~	98,059
	626	Mobilization	L.S.																Paid in full	
	613	1½ Inch Electrical Conduit	Lin.Ft.	168	165														~~333~~	377
(3)		16 Gage Galvanized Sheet Metal	Sq.Ft.	25	50	35													110	
(3)		½ Inch Expansion Joint Material	Sq.Ft.			100													100	

(1) 10 WF 45 or HPS10x42 may be used in lieu of the 10BP42.
(2) Contains mounting bases for Type 5 Guard Rail. Type 5 Guard Rail included in roadway quantities.
(3) To be included in the bid price for Item No. 601 Concrete Class D (Bridge).
(4) Non - Federal Aid

	INITIAL	DATE		INITIAL	DATE
DESIGNED BY	J.B.	5-71	CHECKED BY	MLR	2-72
CALCULATED BY				EHH	8-72
			QUANTITIES BY	MLR	7-72
DETAILED BY	N.H.M.	2-72	CHECKED BY	EHH	8-72

DIVISION OF HIGHWAYS

SUMMARY OF QUANTITIES

Designer J.L. Barber
Detailer Moore
Structure Numbers E-16-EG, E-16-EH
Drawing Number B 2 of 26 Drawings

FEDERAL ROAD REGION NO.	DISTRICT	PROJ. NO.	SHEET NO.	TOTAL SHEETS
VIII	COLORADO	I 25-2(91)209	72	

AS CONSTRUCTED
NO REVISIONS
Date Completed 6-28-74

REVISIONS			
R-1	8-25-72	Added battered piling	TCF
		per C.O. # 04683	

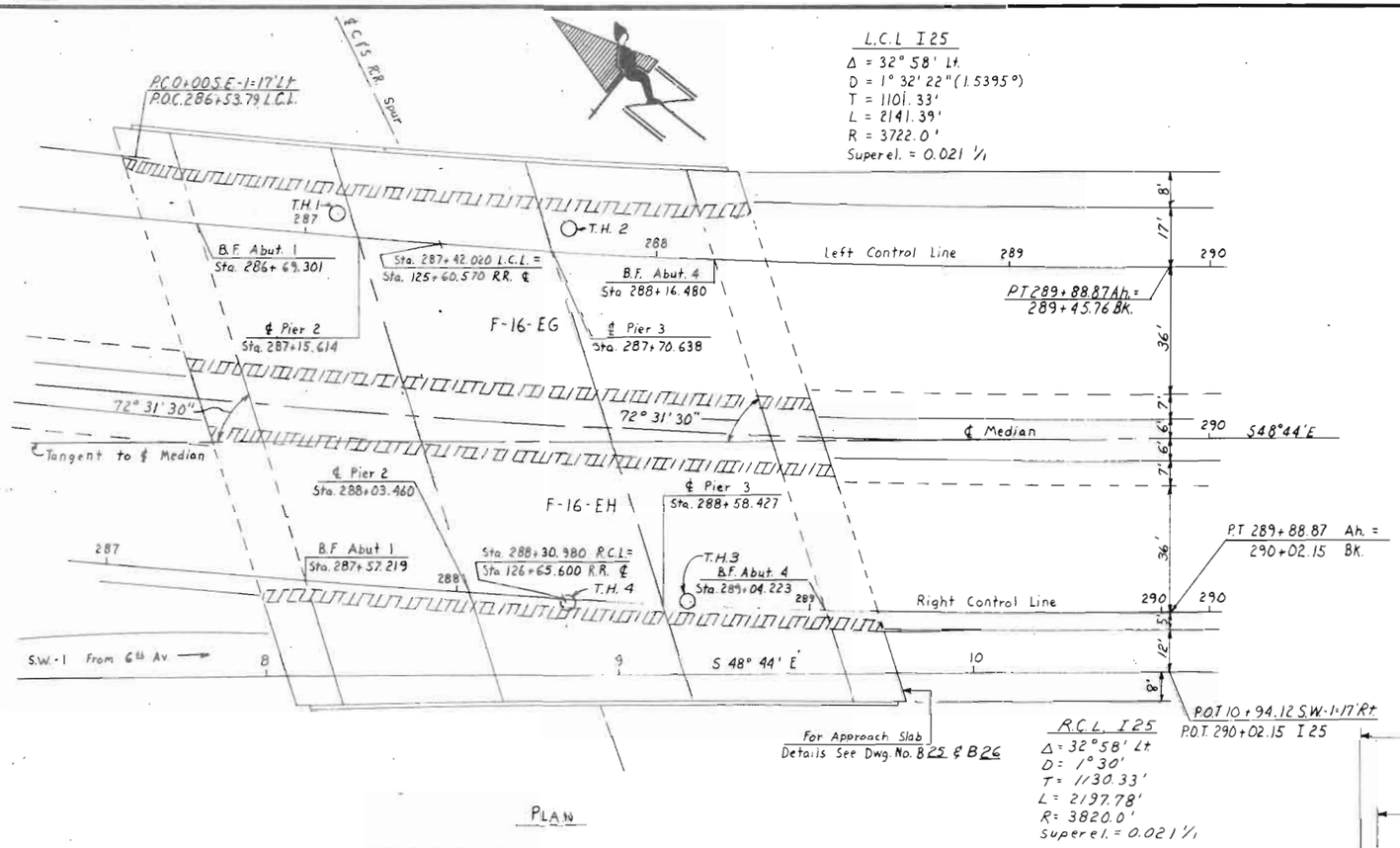

PLAN

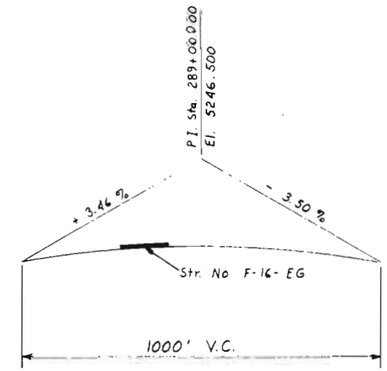

VERTICAL CURVE DIAGRAM (F-16-EG)

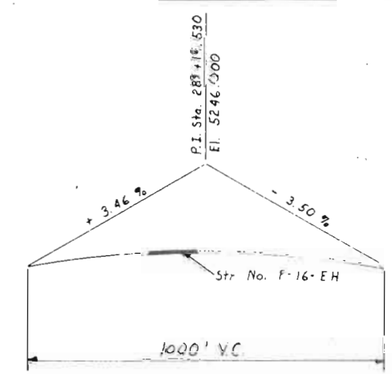

VERTICAL CURVE DIAGRAM (F-16-EH)

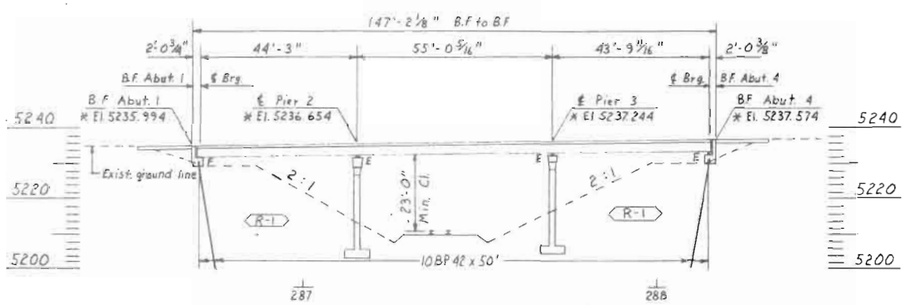

SECTION TAKEN ALONG LEFT CONTROL LINE

Notes:

All pile lengths are estimated.
All piling are end bearing.
* Finished roadway elevations
To be removed

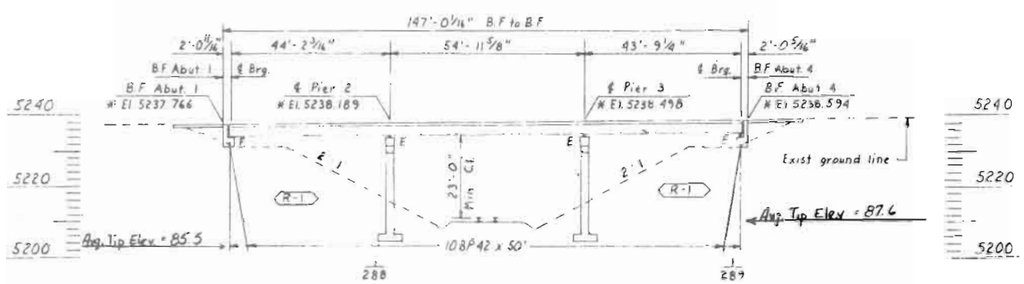

SECTION TAKEN ALONG RIGHT CONTROL LINE

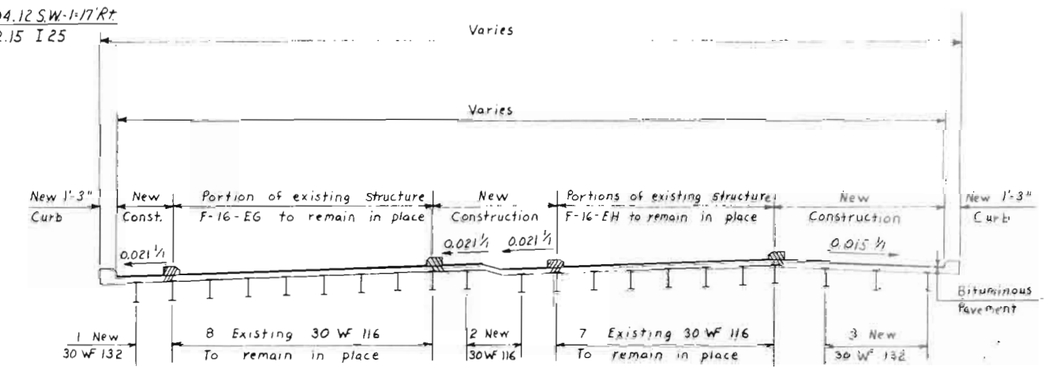

TYPICAL SECTION
(Taken Radially)

For more section information See Dwg No B18 & Dwg. No. B19

① Silty Sand
② Sand & Gravel
③ Brown Shale
④ Blue Shale

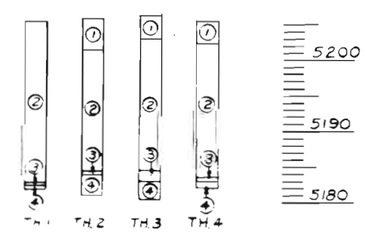

BORING LOG

INITIAL	DATE	CHECKED BY	DATE	CHECKED BY
DESIGNED BY JLB	9-71	QUANTITIES BY	2-72	EHH 2-72
CHECKED BY RWG	2-72	CHECKED BY	2-72	MLR 2-72
DETAILED BY				EHH 2-72
				MLR 2-72

DIVISION OF HIGHWAYS

GENERAL LAYOUT

Designer J. Barber		Structure Numbers	F-16-EG
Detailer R. Gilliland			F-16-EH
Drawing Number B 3	of 26	Drawings	

STATE DEPARTMENT OF HIGHWAYS
DIVISION OF HIGHWAYS — STATE OF COLORADO
CDH FORM NO. 117
JULY 1966

FEDERAL ROAD REGION NO.	DISTRICT	PROJ. NO.	SHEET NO.	TOTAL SHEETS
VIII	COLORADO	I25-2(91)209	73	

AS CONSTRUCTED
NO REVISIONS
Date Completed 6-28-74

REVISIONS		

	INITIAL	DATE		
DESIGNED BY			CHECKED BY	MLR 2-72
CHECKED BY	JLB	9-71	QUANTITIES BY	MLR 2-72
DETAILED BY	RNA	2-72	CHECKED BY	EHH 2-72

EAST SIDE WIDENING — STR F-16-EG

CL BRG ABUT 1
CL PIER 2

	ELEVATION
EAST OUT	
STA BACK	5235.1396
1 10TH	5235.2121
2 10TH	5235.2834
3 10TH	5235.3533
4 10TH	5235.4218
5 10TH	5235.4889
6 10TH	5235.5547
7 10TH	5235.6190
8 10TH	5235.6820
9 10TH	5235.7436
STA AHEAD	5235.8038
E GIRDER 1	
STA BACK	5235.2627
1 10TH	5235.3321
2 10TH	5235.4004
3 10TH	5235.4673
4 10TH	5235.5331
5 10TH	5235.5976
6 10TH	5235.6608
7 10TH	5235.7228
8 10TH	5235.7835
9 10TH	5235.8429
STA AHEAD	5235.9012
EXIST EAST GIRD	
STA BACK	5235.6465
1 10TH	5235.7147
2 10TH	5235.7817
3 10TH	5235.8474
4 10TH	5235.9119
5 10TH	5235.9752
6 10TH	5236.0372
7 10TH	5236.0980
8 10TH	5236.1575
9 10TH	5236.2158
STA AHEAD	5236.2728

CL PIER 2
CL PIER 3

EAST OUT	
STA BACK	5235.8038
1 10TH	5235.8767
2 10TH	5235.9475
3 10TH	5236.0162
4 10TH	5236.0827
5 10TH	5236.1470
6 10TH	5236.2093
7 10TH	5236.2693
8 10TH	5236.3273
9 10TH	5236.3831
STA AHEAD	5236.4367
E GIRDER 1	
STA BACK	5235.9012
1 10TH	5235.9722
2 10TH	5236.0412
3 10TH	5236.1083
4 10TH	5236.1734
5 10TH	5236.2366
6 10TH	5236.2978
7 10TH	5236.3571
8 10TH	5236.4144
9 10TH	5236.4697
STA AHEAD	5236.5231
EXIST EAST GIRD	
STA BACK	5236.2728
1 10TH	5236.3423
2 10TH	5236.4099
3 10TH	5236.4755
4 10TH	5236.5392
5 10TH	5236.6009
6 10TH	5236.6607
7 10TH	5236.7186
8 10TH	5236.7744
9 10TH	5236.8286
STA AHEAD	5236.8804

CL PIER 3
CL BRG ABUT 4

EAST OUT	
STA BACK	5236.4367
1 10TH	5236.4779
2 10TH	5236.5178
3 10TH	5236.5562
4 10TH	5236.5933
5 10TH	5236.6291
6 10TH	5236.6635
7 10TH	5236.6965
8 10TH	5236.7282
9 10TH	5236.7585
STA AHEAD	5236.7875
E GIRDER 1	
STA BACK	5236.5231
1 10TH	5236.5643
2 10TH	5236.6044
3 10TH	5236.6431
4 10TH	5236.6807
5 10TH	5236.7169
6 10TH	5236.7519
7 10TH	5236.7857
8 10TH	5236.8182
9 10TH	5236.8494
STA AHEAD	5236.8794
EXIST EAST GIRD	
STA BACK	5236.8804
1 10TH	5236.9288
2 10TH	5236.9595
3 10TH	5236.9872
4 10TH	5237.0136
5 10TH	5237.0388
6 10TH	5237.1027
7 10TH	5237.1356
8 10TH	5237.1669
9 10TH	5237.1971
STA AHEAD	5237.2260

WEST SIDE WIDENING — STR F-16-EG

CL BRG ABUT 1
CL PIER 2

	ELEVATION
EXIST WEST GIRD	
STA BACK	5236.9739
1 10TH	5237.0355
2 10TH	5237.0958
3 10TH	5237.1549
4 10TH	5237.2129
5 10TH	5237.2696
6 10TH	5237.3251
7 10TH	5237.3794
8 10TH	5237.4324
9 10TH	5237.4843
STA AHEAD	5237.5350
W GIRDER 1	
STA BACK	5237.1725
1 10TH	5237.2332
2 10TH	5237.2926
3 10TH	5237.3508
4 10TH	5237.4078
5 10TH	5237.4636
6 10TH	5237.5182
7 10TH	5237.5716
8 10TH	5237.6238
9 10TH	5237.6748
STA AHEAD	5237.7245
CL JOINT	
STA BACK	5237.1933
1 10TH	5237.2554
2 10TH	5237.3162
3 10TH	5237.3757
4 10TH	5237.4338
5 10TH	5237.4907
6 10TH	5237.5462
7 10TH	5237.6004
8 10TH	5237.6533
9 10TH	5237.7048
STA AHEAD	5237.7550

CL PIER 2
CL PIER 3

EXIST WEST GIRD	
STA BACK	5237.5350
1 10TH	5237.5986
2 10TH	5237.6563
3 10TH	5237.7141
4 10TH	5237.7701
5 10TH	5237.8241
6 10TH	5237.8763
7 10TH	5237.9265
8 10TH	5237.9749
9 10TH	5238.0213
STA AHEAD	5238.0659
W GIRDER 1	
STA BACK	5237.7245
1 10TH	5237.7851
2 10TH	5237.8437
3 10TH	5237.9004
4 10TH	5237.9553
5 10TH	5238.0083
6 10TH	5238.0594
7 10TH	5238.1086
8 10TH	5238.1559
9 10TH	5238.2013
STA AHEAD	5238.2449
CL JOINT	
STA BACK	5237.7550
1 10TH	5237.8156
2 10TH	5237.8742
3 10TH	5237.9307
4 10TH	5237.9852
5 10TH	5238.0377
6 10TH	5238.0880
7 10TH	5238.1364
8 10TH	5238.1827
9 10TH	5238.2269
STA AHEAD	5238.2691

CL PIER 3
CL BRG ABUT 4

EXIST WEST GIRD	
STA BACK	5238.0659
1 10TH	5238.1002
2 10TH	5238.1333
3 10TH	5238.1652
4 10TH	5238.1958
5 10TH	5238.2253
6 10TH	5238.2535
7 10TH	5238.2805
8 10TH	5238.3063
9 10TH	5238.3309
STA AHEAD	5238.3543
W GIRDER 1	
STA BACK	5238.2449
1 10TH	5238.2786
2 10TH	5238.3106
3 10TH	5238.3417
4 10TH	5238.3715
5 10TH	5238.4002
6 10TH	5238.4276
7 10TH	5238.4539
8 10TH	5238.4789
9 10TH	5238.5027
STA AHEAD	5238.5253
CL JOINT	
STA BACK	5238.2691
1 10TH	5238.3012
2 10TH	5238.3321
3 10TH	5238.3616
4 10TH	5238.3899
5 10TH	5238.4168
6 10TH	5238.4425
7 10TH	5238.4668
8 10TH	5238.4899
9 10TH	5238.5116
STA AHEAD	5238.5321

EAST SIDE WIDENING — STR F-16-EH

CL BRG ABUT 1
CL PIER 2

	ELEVATION
W SLOPE MEDIAN	
STA BACK	5236.4694
1 10TH	5236.5219
2 10TH	5236.5731
3 10TH	5236.6229
4 10TH	5236.6712
5 10TH	5236.7182
6 10TH	5236.7638
7 10TH	5236.8080
8 10TH	5236.8508
9 10TH	5236.8922
STA AHEAD	5236.9321
E GIRDER 1	
STA BACK	5236.4922
1 10TH	5236.5424
2 10TH	5236.5913
3 10TH	5236.6389
4 10TH	5236.6852
5 10TH	5236.7303
6 10TH	5236.7741
7 10TH	5236.8166
8 10TH	5236.8579
9 10TH	5236.8979
STA AHEAD	5236.9366
EXIST EAST GIRD	
STA BACK	5236.6767
1 10TH	5236.7260
2 10TH	5236.7740
3 10TH	5236.8207
4 10TH	5236.8661
5 10TH	5236.9103
6 10TH	5236.9532
7 10TH	5236.9949
8 10TH	5237.0353
9 10TH	5237.0744
STA AHEAD	5237.1123

CL PIER 2
CL PIER 3

W SLOPE MEDIAN	
STA BACK	5236.9321
1 10TH	5236.9799
2 10TH	5237.0256
3 10TH	5237.0690
4 10TH	5237.1103
5 10TH	5237.1495
6 10TH	5237.1864
7 10TH	5237.2213
8 10TH	5237.2539
9 10TH	5237.2844
STA AHEAD	5237.3127
E GIRDER 1	
STA BACK	5236.9366
1 10TH	5236.9832
2 10TH	5237.0279
3 10TH	5237.0705
4 10TH	5237.1112
5 10TH	5237.1499
6 10TH	5237.1866
7 10TH	5237.2213
8 10TH	5237.2540
9 10TH	5237.2847
STA AHEAD	5237.3134
EXIST EAST GIRD	
STA BACK	5237.1123
1 10TH	5237.1578
2 10TH	5237.2014
3 10TH	5237.2430
4 10TH	5237.2826
5 10TH	5237.3203
6 10TH	5237.3559
7 10TH	5237.3896
8 10TH	5237.4213
9 10TH	5237.4510
STA AHEAD	5237.4787

CL PIER 3
CL BRG ABUT 4

W SLOPE MEDIAN	
STA BACK	5237.3127
1 10TH	5237.3337
2 10TH	5237.3533
3 10TH	5237.3716
4 10TH	5237.3885
5 10TH	5237.4040
6 10TH	5237.4182
7 10TH	5237.4310
8 10TH	5237.4424
9 10TH	5237.4524
STA AHEAD	5237.4611
E GIRDER 1	
STA BACK	5237.3134
1 10TH	5237.3350
2 10TH	5237.3553
3 10TH	5237.3742
4 10TH	5237.3920
5 10TH	5237.4084
6 10TH	5237.4236
7 10TH	5237.4375
8 10TH	5237.4501
9 10TH	5237.4615
STA AHEAD	5237.4715
EXIST EAST GIRD	
STA BACK	5237.4787
1 10TH	5237.4995
2 10TH	5237.5189
3 10TH	5237.5372
4 10TH	5237.5541
5 10TH	5237.5698
6 10TH	5237.5842
7 10TH	5237.5973
8 10TH	5237.6092
9 10TH	5237.6198
STA AHEAD	5237.6291

WEST SIDE WIDENING — STR F-16-EH

CL BRG ABUT 1
CL BRG PIER 2

	ELEVATION
EXIST WEST GIRDER	
STA BACK	5237.8123
1 TENTH	5237.8563
2 TENTH	5237.8990
3 TENTH	5237.9404
4 TENTH	5237.9807
5 TENTH	5238.0196
6 TENTH	5238.0574
7 TENTH	5238.0939
8 TENTH	5238.1292
9 TENTH	5238.1632
STA AHEAD	5238.1960
WEST GIRDER 1	
STA BACK	5237.7130
1 TENTH	5237.7562
2 TENTH	5237.7981
3 TENTH	5237.8389
4 TENTH	5237.8783
5 TENTH	5237.9166
6 TENTH	5237.9317
7 TENTH	5237.9894
8 TENTH	5238.0239
9 TENTH	5238.0572
STA AHEAD	5238.0891
WEST GIRDER 2	
STA BACK	5237.6134
1 TENTH	5237.6559
2 TENTH	5237.6970
3 TENTH	5237.7371
4 TENTH	5237.7757
5 TENTH	5237.8133
6 TENTH	5237.8495
7 TENTH	5237.8846
8 TENTH	5237.9183
9 TENTH	5237.9509
STA AHEAD	5237.9899
WEST GIRDER 3	
STA BACK	5237.5049
1 TENTH	5237.5487
2 TENTH	5237.5915
3 TENTH	5237.6329
4 TENTH	5237.6732
5 TENTH	5237.7122
6 TENTH	5237.7501
7 TENTH	5237.7868
8 TENTH	5237.8222
9 TENTH	5237.8572
STA AHEAD	5237.8910
WEST OUT	
STA BACK	5237.4745
1 TENTH	5237.5183
2 TENTH	5237.5609
3 TENTH	5237.6022
4 TENTH	5237.6423
5 TENTH	5237.6813
6 TENTH	5237.7191
7 TENTH	5237.7556
8 TENTH	5237.7909
9 TENTH	5237.8627
STA AHEAD	5237.8940

CL BRG PIER 2
CL BRG PIER 3

	ELEVATION
EXIST WEST GIRDER	
STA BACK	5238.1960
1 TENTH	5238.2353
2 TENTH	5238.2727
3 TENTH	5238.3081
4 TENTH	5238.3416
5 TENTH	5238.3731
6 TENTH	5238.4027
7 TENTH	5238.4304
8 TENTH	5238.4561
9 TENTH	5238.4800
STA AHEAD	5238.5018
WEST GIRDER 1	
STA BACK	5238.0891
1 TENTH	5238.1275
2 TENTH	5238.1640
3 TENTH	5238.1985
4 TENTH	5238.2310
5 TENTH	5238.2616
6 TENTH	5238.2903
7 TENTH	5238.3170
8 TENTH	5238.3419
9 TENTH	5238.3647
STA AHEAD	5238.3857
WEST GIRDER 2	
STA BACK	5237.9899
1 TENTH	5238.0269
2 TENTH	5238.0620
3 TENTH	5238.0952
4 TENTH	5238.1264
5 TENTH	5238.1557
6 TENTH	5238.1831
7 TENTH	5238.2085
8 TENTH	5238.2321
9 TENTH	5238.2536
STA AHEAD	5238.2695
WEST GIRDER 3	
STA BACK	5237.8910
1 TENTH	5237.9307
2 TENTH	5237.9685
3 TENTH	5238.0044
4 TENTH	5238.0384
5 TENTH	5238.0706
6 TENTH	5238.1008
7 TENTH	5238.1293
8 TENTH	5238.1558
9 TENTH	5238.1793
STA AHEAD	5238.2012

WEST OUT

STA BACK	5237.8940
1 TENTH	5237.9317
2 TENTH	5237.9673
3 TENTH	5238.0011
4 TENTH	5238.0331
5 TENTH	5238.0635
6 TENTH	5238.0914
7 TENTH	5238.1178
8 TENTH	5238.1421
9 TENTH	5238.1611
STA AHEAD	5238.1822

CL BRG PIER 3
CL BRG ABUT 4

	ELEVATION
EXIT WEST GIRDER	
STA BACK	5238.5018
1 TENTH	5238.5179
2 TENTH	5238.5328
3 TENTH	5238.5464
4 TENTH	5238.5588
5 TENTH	5238.5699
6 TENTH	5238.5798
7 TENTH	5238.5885
8 TENTH	5238.5959
9 TENTH	5238.6021
STA AHEAD	5238.6070
WEST GIRDER 1	
STA BACK	5238.3857
1 TENTH	5238.4011
2 TENTH	5238.4153
3 TENTH	5238.4281
4 TENTH	5238.4397
5 TENTH	5238.4502
6 TENTH	5238.4593
7 TENTH	5238.4672
8 TENTH	5238.4739
9 TENTH	5238.4793
STA AHEAD	5238.4834
WEST GIRDER 2	
STA BACK	5238.2695
1 TENTH	5238.2841
2 TENTH	5238.2975
3 TENTH	5238.3096
4 TENTH	5238.3205
5 TENTH	5238.3301
6 TENTH	5238.3386
7 TENTH	5238.3457
8 TENTH	5238.3517
9 TENTH	5238.3563
STA AHEAD	5238.3587
WEST GIRDER 3	
STA BACK	5238.2012
1 TENTH	5238.2181
2 TENTH	5238.2338
3 TENTH	5238.2483
4 TENTH	5238.2614
5 TENTH	5238.2737
6 TENTH	5238.2845
7 TENTH	5238.2942
8 TENTH	5238.3027
9 TENTH	5238.3112
STA AHEAD	5238.3197
WEST OUT	
STA BACK	5238.1822
1 TENTH	5238.1977
2 TENTH	5238.2120
3 TENTH	5238.2249
4 TENTH	5238.2370
5 TENTH	5238.2476
6 TENTH	5238.2571
7 TENTH	5238.2654
8 TENTH	5238.2723
9 TENTH	5238.2793
STA AHEAD	5238.2809

DEAD LOAD DEFLECTIONS IN FEET

Tenth Pts.	Sta Bk	1	2	3	4	5	6	7	8	9	Sta Ah
Span 1	.0000	.0053	.0114	.0149	.0164	.0158	.0132	.0093	.0049	.0013	.0000
Span 2	.0000	.0033	.0089	.0150	.0195	.0211	.0195	.0150	.0089	.0033	.0000
Span 3	.0000	.0017	.0049	.0093	.0132	.0158	.0164	.0149	.0114	.0062	.0000

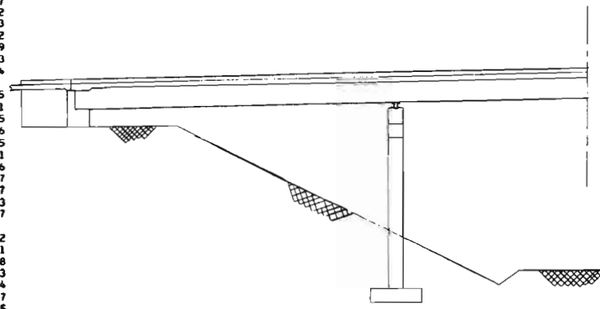

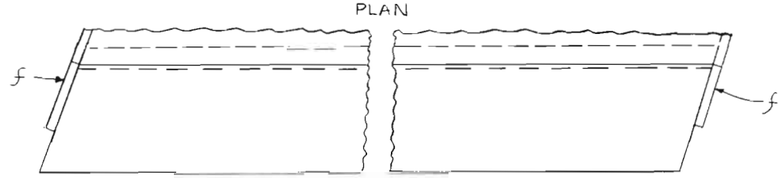

ABUTMENTS

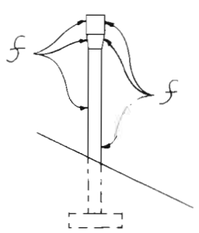

PIERS
NEAR RAILWAY

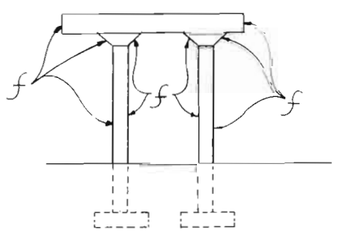

ALL PIERS

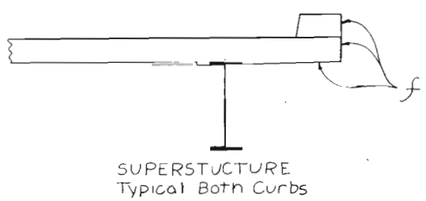

SUPERSTUCTURE
Typical Both Curbs

DETAILS SHOWING PORTIONS OF STRUCTURE
TO RECEIVE CLASS 2 SURFACE FINISH

DIVISION OF HIGHWAYS

DEAD LOAD DEFLECTIONS
ELEVATIONS
SURFACE FINISH DETAILS

Approved:
Bridge Engineer
Date:

Designer: J. Barber | Detailer: R. Akin
Structure Numbers: F-16-EG, F-16-EH
DWG. No. B 4 OF 26

FEDERAL ROAD REGION NO.	DISTRICT	PROJ. NO.	SHEET NO.	TOTAL SHEETS
VIII	COLORADO	I 25-2(91)209	74	

AS CONSTRUCTED
WITH REVISIONS
Date Completed 6-28-74

REVISIONS		

BAR LIST ~ PIER 2 MEDIAN

Mark	No. Req'd.	Length	Type	Dimensions h	v	d
404	22	7-4	I	1-8	1-8	0-4
407	3	4-8	II	1-8	1-6	
408	2	14-10½	Str			
450	4	7-4	I	1-8	1-8	0-4
506	24	6-11	Str.			
507	4	9-0	VII	7-6	1-6	
515	17	8-5	I	1-8	2-1½	0-5
6156	8	1-6	Str.			
6157	3	10-0	XIV			
1002	12	5-6	VII	4-2	1-4	
1003	8	14-10½	Str.			
1005	3	9-0	Str.			
1006	12	25-6	Str.			
1050	12	10	Str.			

SUMMARY

No. Lin. Ft.	Bar Size	Lb./Lin. Ft.	Weight
~~205~~ 234	4	.668	~~137~~ 156
345	5	1.043	360
42	6	1.502	63
~~518~~ 638	10	4.303	~~2,229~~ 2,745
		Total	~~2,789~~ 3,324

BAR LIST ~ PIER 2 WEST

Mark	No. Req'd.	Length	Type	Dimensions h	v	d
404	46	7-4	I	1-8	1-8	0-4
410	2	24-10	Str			
450	8	7-4	I	1-8	1-8	0-4
506	48	6-11	Str.			
508	13	8-9	I	1-8	2-3½	0-5
509	20	7-10	I	1-2½	2-3½	0-5
6156	4	1-6	Str.			
6157	6	10-0	XIV			
901	4	24-10	Str.			
902	10	8-4	Str.			
1002	24	5-6	VII	4-2	1-4	
1007	24	26-6	Str.			
1008	4	24-10	Str.			
1009	3	12-0	Str.			
1050	24	10	Str.			

SUMMARY

No. Lin. Ft.	Bar Size	Lb./Lin. Ft.	Weight
~~387~~ 446	4	.668	~~259~~ 298
602	5	1.043	628
66	6	1.502	99
183	9	3.400	622
~~903~~ 1143	10	4.303	~~3,886~~ 4,918
		Total	~~5,494~~ 6,565

BAR LIST ~ SUPERSTRUCTURE EAST

Mark	No. Req'd.	Length	Type	Dimensions h	v	d
401	145	3-1	II	0-11	1-1	
402	22	4-8	I	0-10	1-2	0-4
501	62	60-0	Str.			
510	31	30-0	Str.			
6147	18	5-10	Str.			
601	58	14-4	Str.			
6149	48	14-1	Str.			
6150	120	13-9½	Str.			
6151	318	13-6½	Str.			

SUMMARY

No. Lin. Ft.	Bar Size	Lb./Lin. Ft.	Weight
554	4	.668	370
4650	5	1.043	4,850
7574	6	1.502	11,376
		Total	16,596

BAR LIST ~ SUPERSTRUCTURE WEST

Mark	No. Req'd.	Length	Type	Dimensions h	v	d
401	142	3-1	II	0-11	1-1	
402	22	4-8	I	0-10	1-2	0-4
501	94	60-0	Str.			
502	38	29-2	Str.			
503	9	27-0	Str.			
504	32	46-0	Str.			
505	16	57-0	Str.			
6201 to 6452	2 Ea.	30-10 B.E.1 23-9	Str.			

SUMMARY

No. Lin. Ft.	Bar Size	Lb./Lin. Ft.	Weight
545	4	.668	364
9375	5	1.043	9,778
13,755	6	1.502	20,660
		Total	30,802

BAR LIST ~ SUPERSTRUCTURE MEDIAN EG

Mark	No. Req'd	Length	Type	Dimensions h	v	d
501	42	60-0	Str.			
510	21	30-0	Str.			
6152	126	8-6	Str.			
6153	282	8-9	Str.			
6154	46	8-3	Str.			
6155	48	8-0	Str.			

SUMMARY

No. Lin. Ft	Bar Size	Lb./Lin. Ft.	Weight
3150	5	1.043	3,285
4302	6	1.502	6,462
		Total	9,747

BAR LIST ~ SUPERSTRUCTURE MEDIAN EH

Mark	No. Req'd.	Length	Type	Dimensions h	v	d
501	46	60-0	Str.			
502	23	29-2	Str.			
6137	18	11-3	XI	8-4	2-11	0-9
6138	24	11-0	XI	8-1	2-11	0-9
6139	30	10-9	XI	7-10	2-11	0-9½
6140	148	10-6½	XI	7-7	2-11½	0-10
6141	32	10-9¾	XI	7-10	2-11¾	1-0½
6142	18	11-3	XI	8-4	2-11	0-8½
6143	24	11-0	XI	8-4	2-8	0-8¾
6144	30	10-9	XI	8-4	2-5	0-9⅛
6145	148	10-6½	XI	8-4	2-2½	0-9¾
6146	32	10-10	XI	8-4	2-6	1-0¼

SUMMARY

No. Lin Ft.	Bar Size	Lb./Lin. Ft	Weight
3431	5	1.043	3,579
5391	6	1.502	8,097
		Total	11,676

BAR LIST ~ PIER 3 MEDIAN

Mark	No Req'd.	Length	Type	Dimensions h	v	d
404	22	7-4	I	1-8	1-8	0-4
407	3	4-8	II	1-8	1-6	
409	2	14-6	Str.			
450	4	7-4	I	1-8	1-8	0-4
506	24	6-11	Str.			
507	4	9-0	VII	7-6	1-6	
515	17	8-5	I	1-8	2-1½	0-5
6156	8	1-6	Str.			
6157	3	10-0	XIV			
1002	12	5-6	VII	4-2	1-4	
1004	8	14-6	Str.			
1005	3	9-0	Str.			
1006	12	25-6	Str.			
1050	12	10	Str.			

SUMMARY

No. Lin. Ft.	Bar Size	Lb./Lin. Ft.	Weight
~~204~~ 234	4	.668	~~136~~ 156
345	5	1.043	360
42	6	1.502	63
~~515~~ 635	10	4.303	~~2,216~~ 2,732
		Total	~~2,715~~ 3,311

BAR LIST ~ PIER 3 WEST

Mark	No Req'd.	Length	Type	Dimensions h	v	d
404	46	7-4	I	1-8	1-8	0-4
411	2	22-2	Str.			
450	8	7-4	I	1-8	1-8	0-4
506	48	6-11	Str			
510	17	8-8	I	1-8	2-3	0-5
511	10	7-9	I	1-2½	2-3	0-5
6156	4	1-6	Str.			
6157	6	10-0	XIV			
902	5	8-4	Str.			
903	2	7-0	Str.			
904	8	22-2	Str.			
1002	24	5-6	VII	4-2	1-4	
1007	24	26-6	Str.			
1010	3	10-0	Str.			
1050	24	10	Str.			

SUMMARY

No. Lin Ft.	Bar Size	Lb./Lin. Ft.	Weight
~~388~~ 441	4	.668	~~256~~ 295
557	5	1.043	581
66	6	1.502	99
233	9	3.400	792
~~910~~ 1,038	10	4.303	~~3,934~~ 4,466
		Total	~~5,607~~ 6,233

For bending diagrams see
Dwg No. B 6

Reinforcing Steel is Grade 60

INITIAL	DATE	CHECKED BY	DATE
JLB	9-71	E.T.H.	2-72
		M.R.	2-72
		QUANTITIES BY	
		E.T.H.	2-72
		CHECKED BY	
		M.R.	2-72
DESIGNED BY			
CHECKED BY			
DETAILED BY	RWG	2-72	

DIVISION OF HIGHWAYS

BAR LIST

Designer	J. Barber	Structure Numbers	F-16-EG
Detailer	R. Gilliland		F-16-EH
Drawing Number B 5		of 26	Drawings

FEDERAL ROAD REGION NO.	DISTRICT	PROJ. NO.	SHEET NO.	TOTAL SHEETS
VIII	COLORADO	125-2(91)209	75	

REVISIONS		

AS CONSTRUCTED WITH REVISIONS
Date Completed 6-28-74

BAR LIST ~ ABUTMENT 1 EAST

Mark	No. Req'd	Length	Type	Dimensions h	v	d
401	8	3-1	II	0-11	1-1	
402	2	4-8	I	0-10	1-2	0-4
415	3	4-5	str.			
416	8	11-9	II	0-11	5-5	
417	8	10-2	I	2-8	2-1	0-4
418	6	9-2	str.			
419	9	8-4	II	0-8	3-10	
420	1	8-2	str.			
421	1	9-4	str.			
516	4	7-7	str.			
517	10	10-4	str.			
518	4	8-3	str.			
519	4	8-11	str.			
6160	8	1-6	str.			

SUMMARY

No. Lin. Ft.	Bar Size	Lb./Lin. Ft.	Weight
370	4	.668	247
202	5	1.043	211
12	6	1.502	18
		Total	476

BAR LIST ~ ABUTMENT 1 WEST

Mark	No. Req'd.	Length	Type	Dimensions h	v	d
401	8	3-1	II	0-11	1-1	
402	2	4-8	I	0-10	1-2	0-4
427	7	27-9	str.			
428	1	28-8	str.			
429	28	8-2	II	0-8	3-9	
430	23	10-2	I	2-8	2-1	0-4
431	8	11-11	II	0-11	5-6	
432	3	4-6	str.			
523	2	6-4	str.			
524	2	7-4	str.			
525	10	10-0	str.			
6160	27	1-6	str			
702	4	28-8	str.			
703	4	27-9	str.			

SUMMARY

No. Lin. Ft.	Bar Size	Lb./Lin Ft.	Weight
828	4	.668	553
127	5	1.043	132
41	6	1.502	62
226	7	2.044	462
		Total	1209

BAR LIST ~ ABUTMENT 4 WEST

Mark	No. Req'd.	Length	Type	Dimensions h	v	d
401	10	3-1	II	0-11	1-1	
402	2	4-8	I	0-10	1-2	0-4
457	21	11-2	X	5-3		
459	2	26-5	Str.			
460	8	20-9	Str.			
461	1	20-4	Str.			
462	17	10-2	I	2-1	2-8	0-4
463	11	13-7	II	0-11	6-4	
464	2	5-2	Str.			
465	1	21-0	Str.			
534	4	9-11	Str.			
535	16	12-2	Str.			
6160	21	1-6	Str.			
704	4	20-9	Str.			
705	4	20-4	Str.			

SUMMARY

No. Lin Ft.	Bar Size	Lb./Lin. Ft	Weight
888	4	.668	593
247	5	1.043	258
32	6	1.502	48
164	7	2.044	335
		Total	1234

BAR LIST ~ ABUTMENT 4 MEDIAN

Mark	No. Req'd.	Length	Type	Dimensions h	v	d
441	8	16-0	Str.			
442	2	8-6	Str.			
443	2	19-4	Str.			
444	2	10-7	Str.			
445		10-4		2-2		
to	1 Eq.	B.E.I.	I	B.E.I.	2-8	0-4
450		11-2		2-7		
451		9-2		1-7		
to	1 Eq.	B.E.I.	I	B.E.I.	2-8	0-4
456		10-0		2-0		
457	13	11-2	X	5-3		
458	3	13-2	X	6-3		
531	4	7-6	Str.			
532	4	8-4	Str.			
533	4	15-11	Str.			
6160	16	1-6	Str.			

SUMMARY

No. Lin. Ft.	Bar Size	Lb./Lin. Ft.	Weight
511	4	.668	341
127	5	1.043	132
24	6	1.502	36
		Total	509

BENDING DIAGRAMS

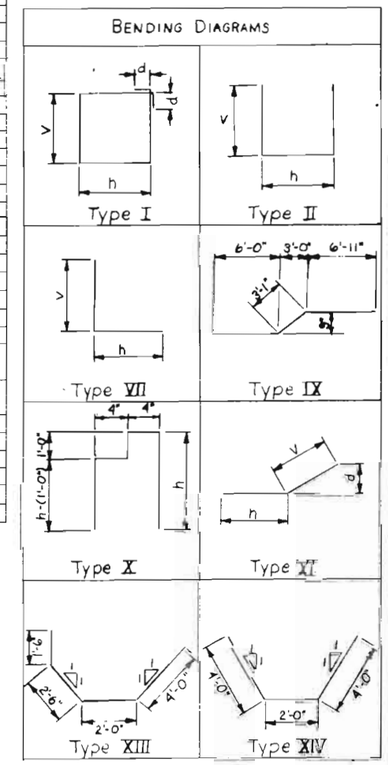

BAR LIST ~ ABUTMENT 1 MEDIAN

Mark	No. Req'd	Length	Type	Dimensions h	v	d
422	7	9-6	I	1-9	2-8	0-4
423	6	10-6	I	2-3	2-8	0-4
424	17	7-6	II	0-8	3-5	
425	4	16-0	IX			
426	2	16-0	str.			
520	4	7-6	str.			
521	4	10-0	str.			
522	4	16-0	str.			
6160	17	1-6	str.			

SUMMARY

No. Lin. Ft	Bar Size	Lb./Lin. Ft	Weight
353	4	.668	236
134	5	1.043	140
26	6	1.502	39
		Total	415

BAR LIST ~ PIER 2 OR 3 EAST

Mark	No. Req'd.	Length	Type	Dimensions h	v	d
403	8	9-10	I	2-5	2-2	0-4
404	21	7-4	I	1-8	1-8	0-4
405	2	9-4	str.			
450	4	7-4	I	1-8	1-8	0-4
506	24	6-11	str.			
6148	3	10-0	XIII			
6156	4	1-6	str.			
701	8	9-4	str.			
1001	12	24-6	str.			
1002	12	5-6	VII	4-2	1-4	
1050	12	10	Str.			

SUMMARY

No. Lin Ft.	Bar Size	Lb./Lin. Ft.	Weight
273 ~~244~~	4	.668	182 ~~163~~
166	5	1.043	173
36	6	1.502	54
75	7	2.044	153
480 ~~360~~	10	4.303	2,065 ~~1549~~
		Total	~~2092~~ 2,627

BAR LIST ~ ABUTMENT 4 EAST

Mark	No. Req'd.	Length	Type	Dimensions h	v	d
401	10	3-1	II	0-11	1-1	
402	2	4-8	I	0-10	1-2	0-4
433	10	11-8	X	5-6		
434	2	14-8	Str.			
435	8	9-3½	Str.			
436	10	10-2	I	2-1	2-8	0-4
437	1	9-3	Str.			
438	1	10-2	Str.			
439	10	14-1	II	0-11	6-7	
440	3	5-4	Str.			
525	2	10-0	Str.			
526	4	9-3	Str.			
527	4	9-9	Str.			
528	2	9-0	Str.			
529	6	12-2	Str.			
530	11	11-3	Str.			
6160	9	1-6	Str.			

SUMMARY

No. Lin Ft	Bar Size	Lb./Lin. Ft.	Weight
538	4	.668	359
311	5	1.043	324
14	6	1.502	21
		Total	704

Reinforcing Steel is Grade 60

DESIGNED BY		INITIAL	JLB
CHECKED BY	EHH	DATE	5-71
QUANTITIES BY	MLA	CHECKED BY	HHM
CHECKED BY	EHH		2-72
DETAILED BY			

DIVISION OF HIGHWAYS

BAR LIST

Designer	J. L. Barber	Structure Numbers	F-16-EG
Detailer	Mays		F-16-EH
Drawing Number B6		of 26	Drawings

STATE DEPARTMENT OF HIGHWAYS
DIVISION OF HIGHWAYS — STATE OF COLORADO
DOH FORM NO. 117
JUL. 1968

FEDERAL ROAD REGION NO.	DISTRICT	PROJ. NO.	SHEET NO.	TOTAL SHEETS
VIII	COLORADO	I 25-2(91)209	76	

REVISIONS

AS CONSTRUCTED
NO REVISIONS
Date Completed 6-28-74

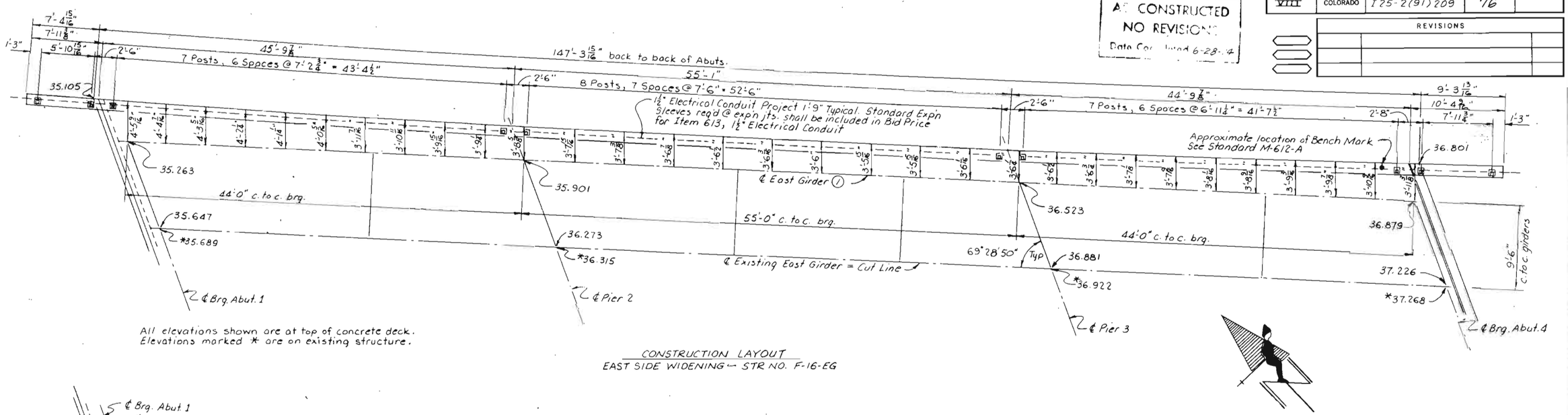

All elevations shown are at top of concrete deck.
Elevations marked * are on existing structure.

CONSTRUCTION LAYOUT
EAST SIDE WIDENING — STR. NO. F-16-EG

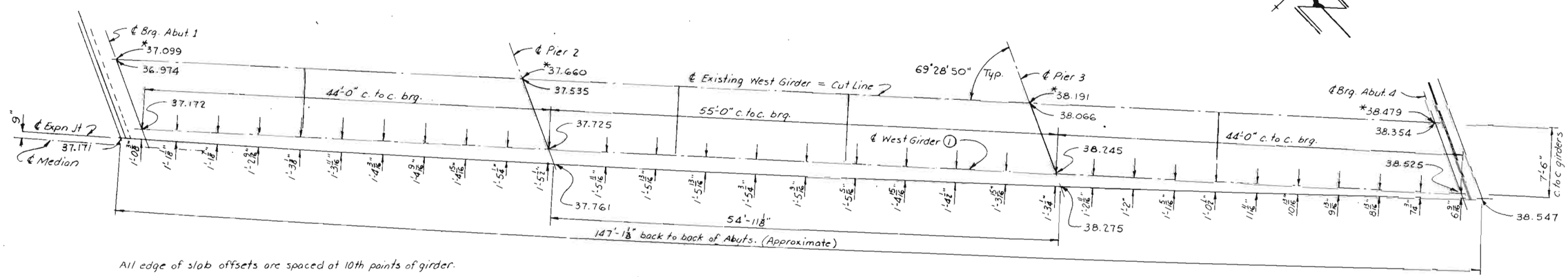

All edge of slab offsets are spaced at 10th points of girder.

CONSTRUCTION LAYOUT
WEST SIDE WIDENING — STR. NO. F-16-EG

INITIAL	DATE		BY
DESIGNED BY	J.L.B.	CHECKED BY	EHH 2-72
CHECKED BY		QUANTITIES BY	MLE 2-72
DETAILED BY	R.R.A.	7-14-71	CHECKED BY MLE 2-72

Stations & Elevations shown are calculated from "As Constructed Plans" for Structure Nos F-16-EG & F-16-EH. These elevations may be adjusted to meet the existing conditions in the field.

DIVISION OF HIGHWAYS

CONSTRUCTION LAYOUT

Approved:

Bridge Engineer

Date:

Designer: J.L. Barber | Detailer: R. Akin

Structure Number: F-16-EG

DWG. No. B 7 OF 26

FEDERAL ROAD REGION NO.	DISTRICT	PROJ. NO.	SHEET NO.	TOTAL SHEETS
VIII	COLORADO	I 25-2(91)209	77	

AS CONSTRUCTED
NO REVISIONS
Date Completed 6-28-74

REVISIONS		

All edge of slab offsets are at 10th points of girder.

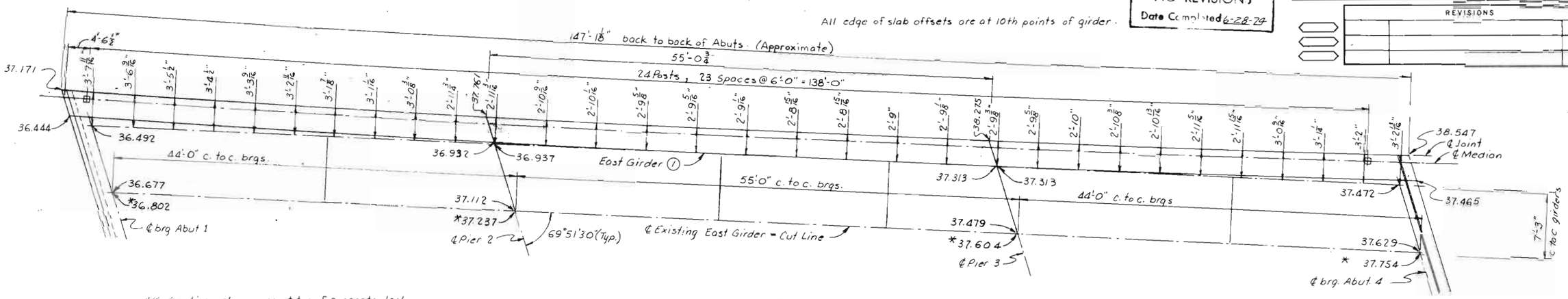

All elevations shown are at top of concrete deck.
Elevations marked * are on existing structure.

CONSTRUCTION LAYOUT
EAST SIDE WIDENING - STR NO. F-16-EH

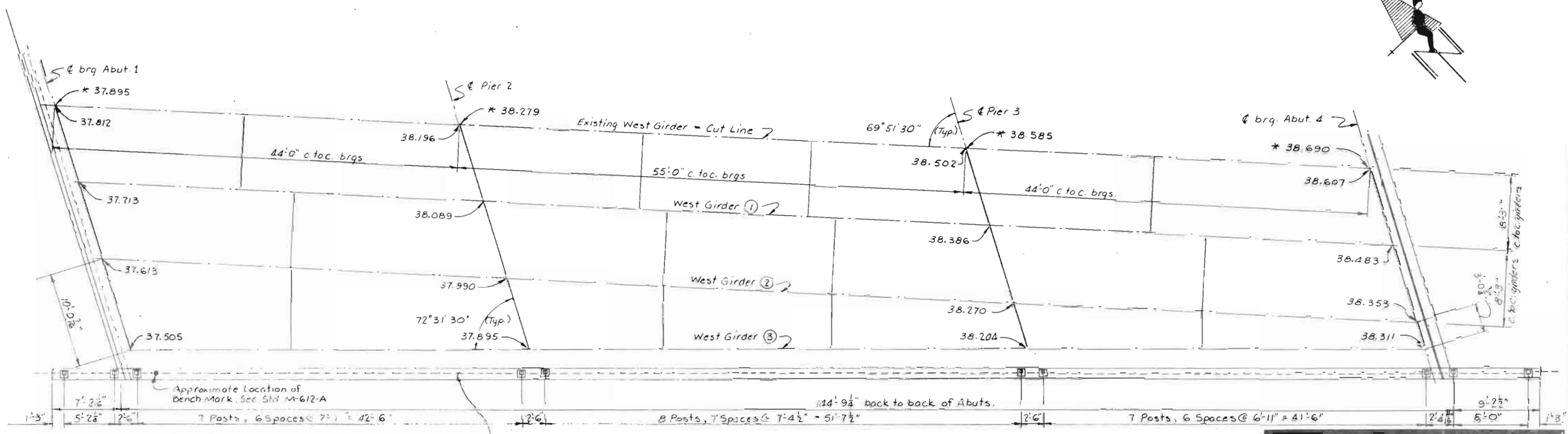

1" Electrical Conduit, Project 1'-9" Typical. Standard Expn Sleeves reqd @ expn jts shall be included in Bid Price for Item 613, 1 1/2" Electrical Conduit

CONSTRUCTION LAYOUT
WEST SIDE WIDENING - STR NO. F-16-EH

	INITIAL	DATE	
DESIGNED BY	J.L.B.	5-71	CHECKED BY EHH 2-72
CHECKED BY			QUANTITIES BY MLR 2-72
DETAILED BY	R.E.A.	7-22-71	CHECKED BY EHH 2-72
			CHECKED BY MLR 2-72

DIVISION OF HIGHWAYS

CONSTRUCTION LAYOUT

Approved:
Bridge Engineer
Date:

Designed: J. L. Barber Detailed: R. Elkin
Structure Numbers: F-16-EH

DWG. No. B8 OF 26

FEDERAL ROAD REGION NO.	DISTRICT	PROJ. NO.	SHEET NO.	TOTAL SHEETS
VIII	COLORADO	I 25-2(91)209	78	

REVISIONS			
R-1	8-25-72	Moved pile added note	TCF
		per C.O. # 04683	

AS CONSTRUCTED
NO REVISION
Date Completed 6-28-74

PILING CUTOFF ELEVATION LOADING
ALL PILING 12BP42

Pile No.	Cutoff Elev.	Load (Tsn/Pile)
1	30.32	23.0
2	30.32	23.6
3	32.00	43.1
4	31.87	43.1
5	32.61	40.0
6	32.61	40.0
7	32.61	40.0
8	31.03	26.0
9	31.03	26.0
10	32.28	43.1
11	32.08	43.1
12	32.50	54.2
13	32.50	54.2

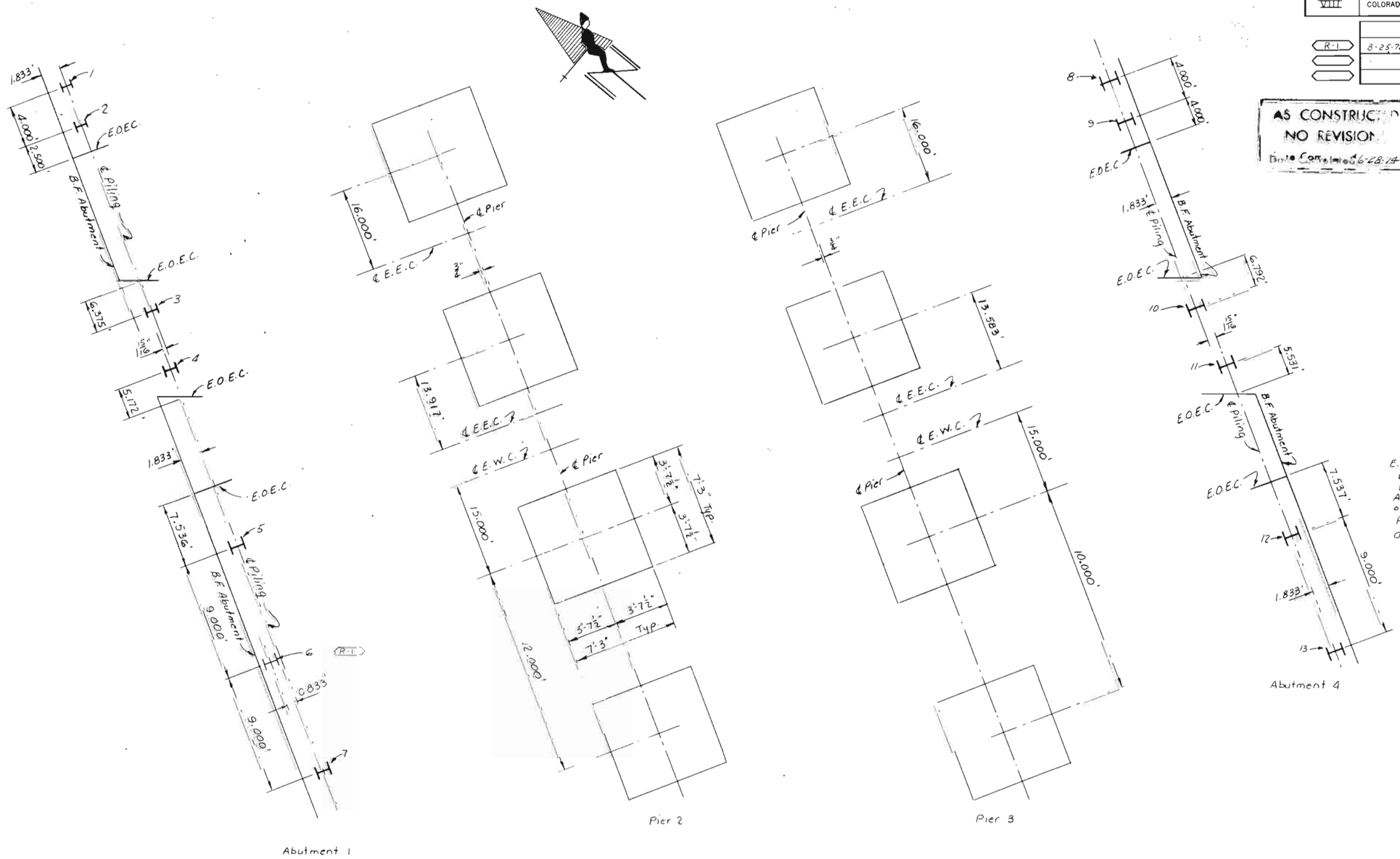

Abutment 1

Pier 2

Pier 3

Abutment 4

E.O.E.C. = End of Existing Cap
E.E.C. = Existing East Column
E.W.C. = Existing West Column
All dimensions are at bottom of footing
Piling 2, 3, 4, 5, 7, 9, 10, 11, and 12 are battered. R-1

FOOTING & PILING LAYOUT

DESIGNED BY	R.R.A.	12-14-71	
CHECKED BY	EHH	2-72	
QUANTITIES BY	EHH	2-72	
CHECKED BY	MLR	2-72	

DIVISION OF HIGHWAYS

FOOTING & PILING LAYOUT

Approved:
Bridge Engineer
Date:

Designer: J.L. Barber | Detailer: R. Akis
Structure Numbers: F-16-EG, F-16-EH
DWG. No. B 9 OF 28

FEDERAL ROAD REGION NO.	DISTRICT	PROJ. NO.	SHEET NO.	TOTAL SHEETS
VIII	COLORADO	I 25-2(91) 209	79	

REVISIONS		
R-1	8-25-72 Battered pile, added piling & note	TCF
	per C.O. # 04683	

AS CONSTRUCTED
NO REVISIONS
Date Completed 6-28-74

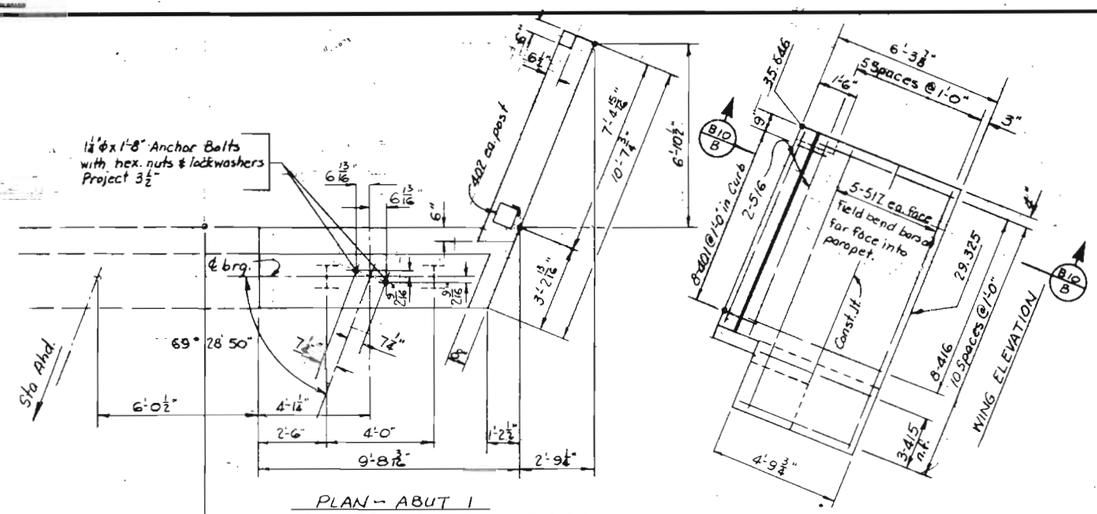

PLAN – ABUT 1
EAST SIDE WIDENING – STR NO F-16-EG

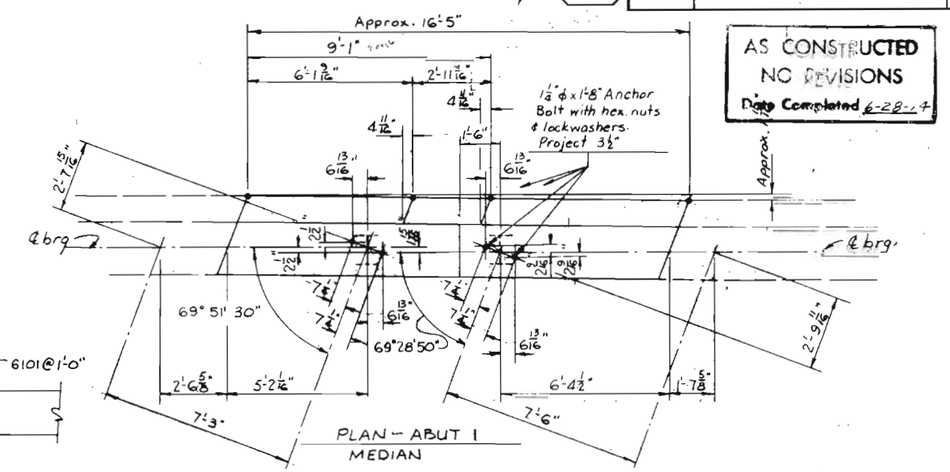

PLAN – ABUT 1
MEDIAN

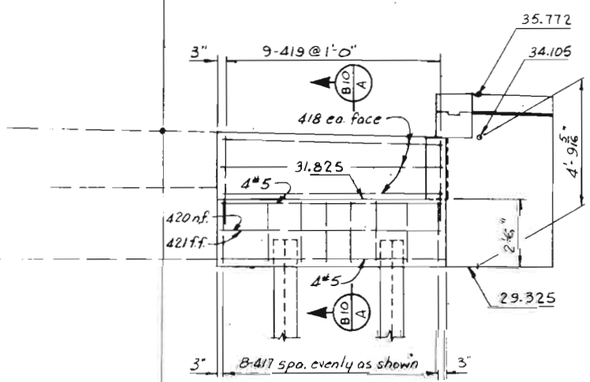

ELEVATION – ABUT 1
EAST SIDE WIDENING – STR. NO F-16-EG

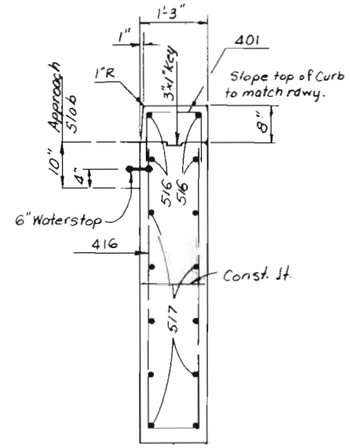

SECTION B10/B

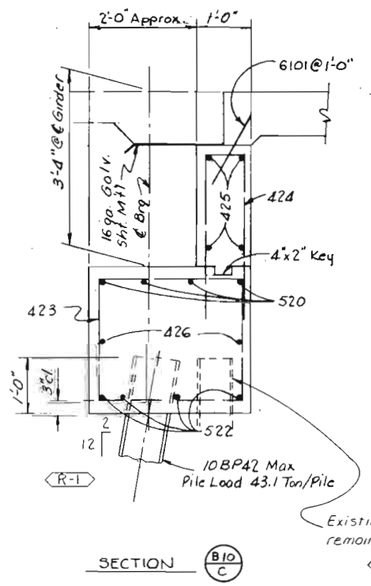

SECTION B10/C

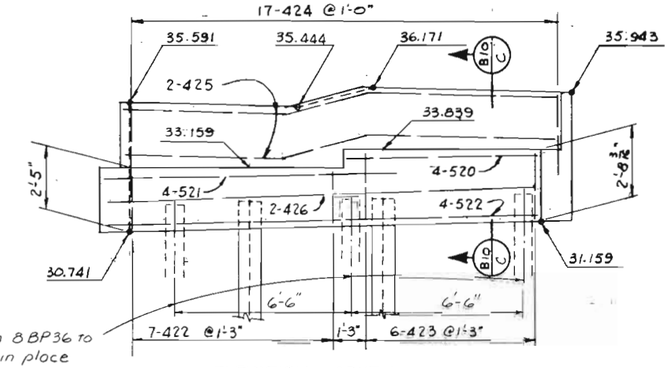

ELEVATION – ABUT 1
MEDIAN

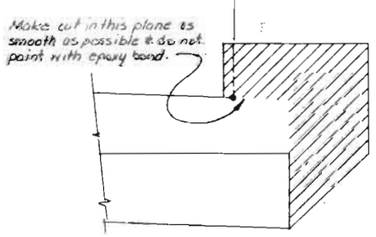

WING REMOVAL DETAIL

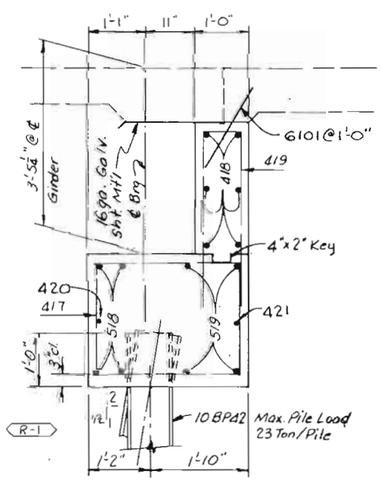

SECTION B10/A

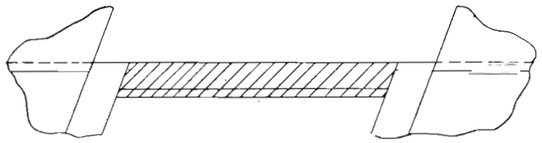

MEDIAN REMOVAL DETAIL

Remove all concrete in median leaving the piling intact. Handrail to remain the property of Division of Highways. Equipment used in removal shall be as approved by the engr.

Notes:
Dimensions and Elevations are at the back face of abut. unless otherwise noted.
Wingwalls and Abutments shall be poured monolithically up to construction joints.
All reinforcing shall be 2" cl. unless noted otherwise.

	INITIAL	DATE		INITIAL	DATE
DESIGNED BY	J.L.B.	5-71	CHECKED BY	E.N.H.	2-72
CHECKED BY			QUANTITIES BY	M.L.R.	2-72
DETAILED BY	R.R.A.	10-6-71	CHECKED BY	E.N.H.	2-72
				M.L.R.	2-72

DIVISION OF HIGHWAYS

DETAILS – ABUTMENT 1
EAST SIDE WIDENING
MEDIAN

Approved:
Bridge Engineer
Date:

Designer: G.L. Barber Detailer: R. Akin
Structure Numbers F-16-EG
DWG. No. B 10 OF 26

FEDERAL ROAD REGION NO.	DISTRICT	PROJ. No.	SHEET NO.	TOTAL SHEETS
VIII	COLORADO	I 25-2(91)209	80	

REVISIONS			
R-1	8-25-72	Moved piling per CO # 04683	TCF

AS CONSTRUCTED NO REVISIONS Date [illegible] 6-20-74

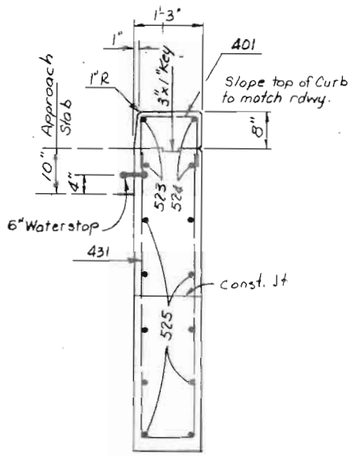

SECTION B11/A

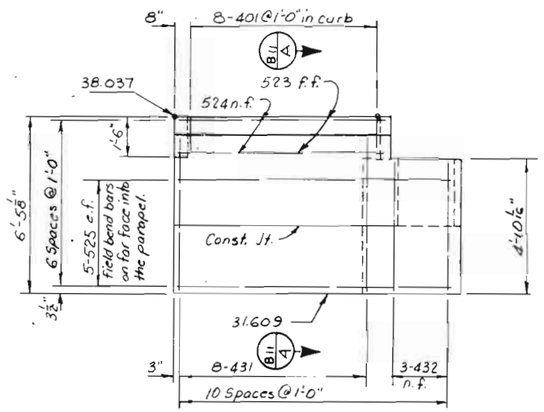

WING ELEVATION

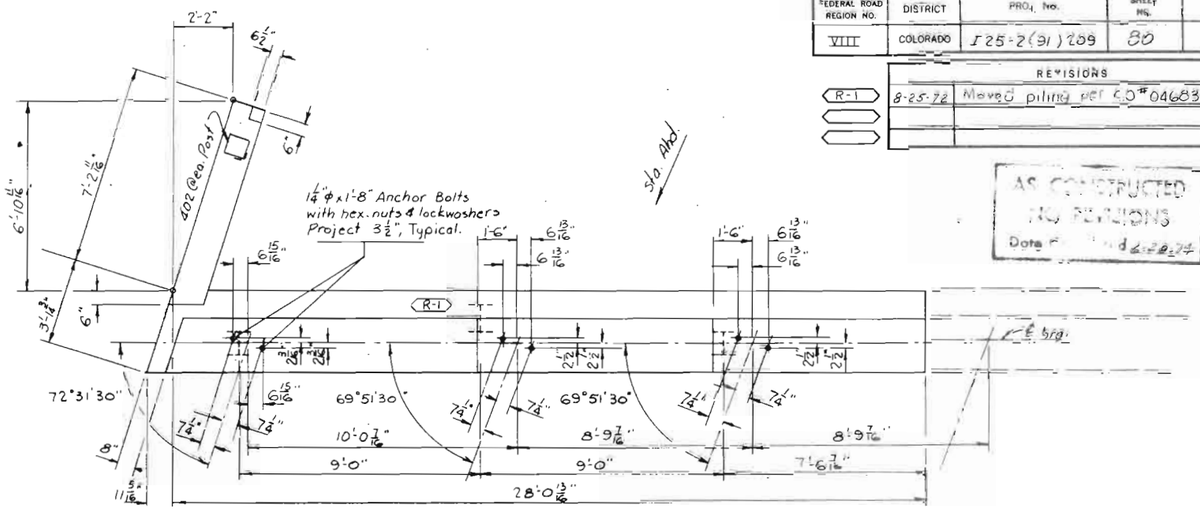

PLAN – ABUT 1
WEST SIDE WIDENING – STR. NO. F-16-EH

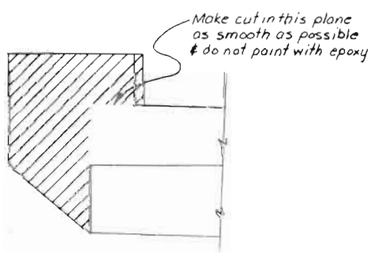

Save protruding horizontal steel for dowels. Equipment used in removal shall be approved by the engineer.

WING REMOVAL DETAIL

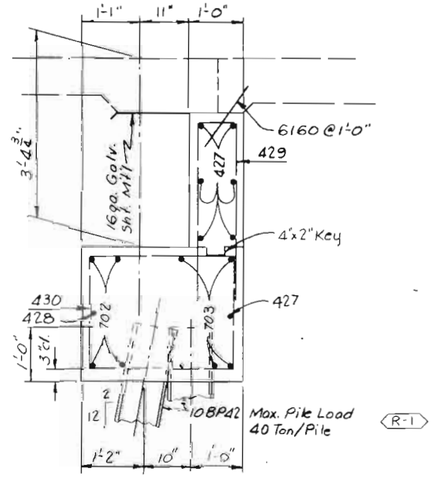

SECTION B11/B

R-1

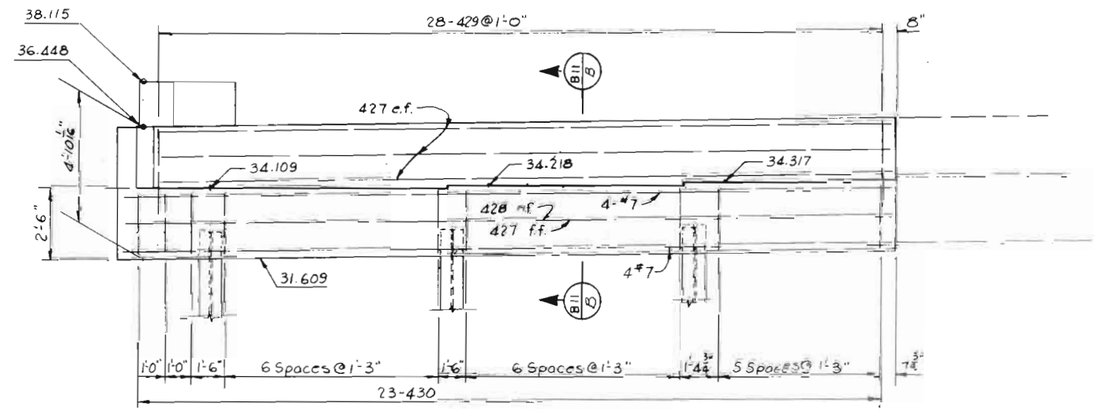

ELEVATION – ABUT 1
WEST SIDE WIDENING – STR. NO F-16-EH

Notes:
Dimensions and Elevations are at the backface of the abutment unless noted otherwise
Wingwalls and Abutments shall be poured monolithically up to construction joints.
All reinforcing shall be 2" cl. unless noted otherwise.

	INITIAL	DATE			
DESIGNED BY	J.L.B.	5-71	CHECKED BY	EHH	2-72
CHECKED BY			QUANTITIES BY	MLR	2-72
DETAILED BY	R.R.A.	10-13-71	CHECKED BY	EHH	2-72
				MLR	2-72

DIVISION OF HIGHWAYS

DETAILS – ABUTMENT 1
WEST SIDE WIDENING

Approved:	Designer: J.L. Barber	Detailer: R. Akin
Bridge Engineer	Structure Numbers	F-16-EH
Date:	DWG. No. B11	OF 26

FEDERAL ROAD REGION NO.	DISTRICT	PROJ. NO.	SHEET NO.	TOTAL SHEETS
VIII	COLORADO	I 25-2(91)206	61	

REVISIONS			
R-1	8-25-72	Batter of pile added piling & note per C.O. # 04083	TCF

AS CONSTRUCTED
NO REVISIONS
Date Completed 6-28-74

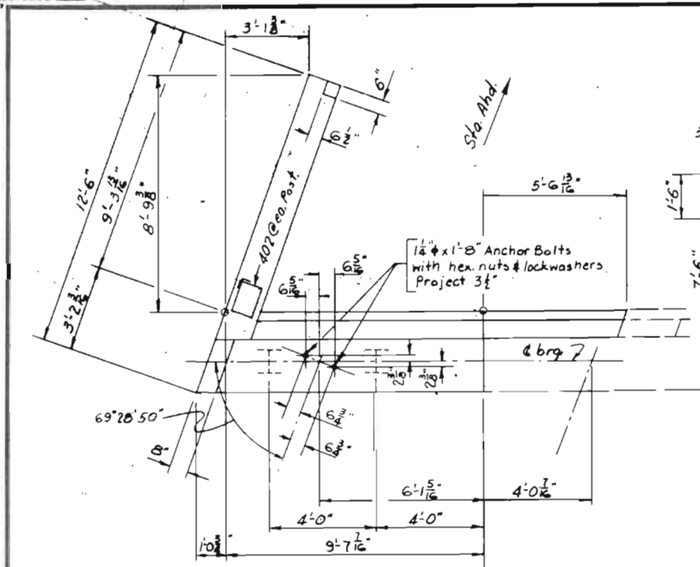

PLAN – ABUT 4
EAST SIDE WIDENING – STR. NO. F-16-EG

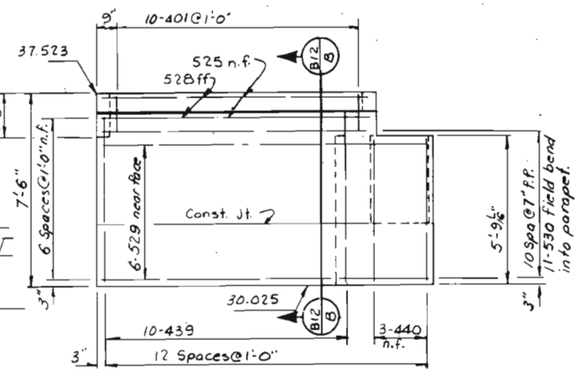

WING ELEVATION

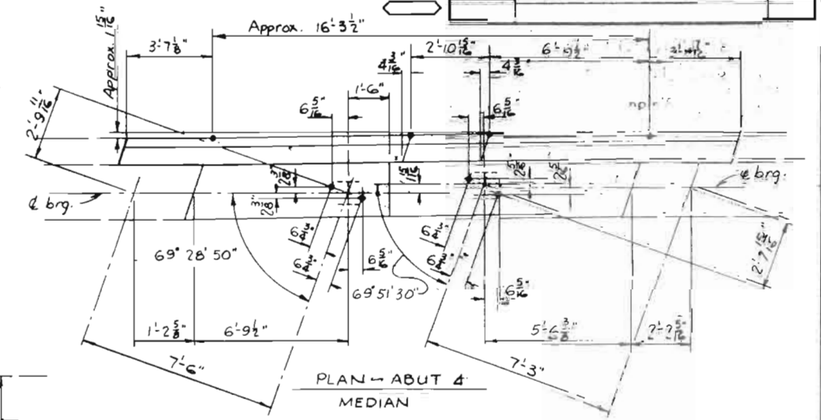

PLAN – ABUT 4
MEDIAN

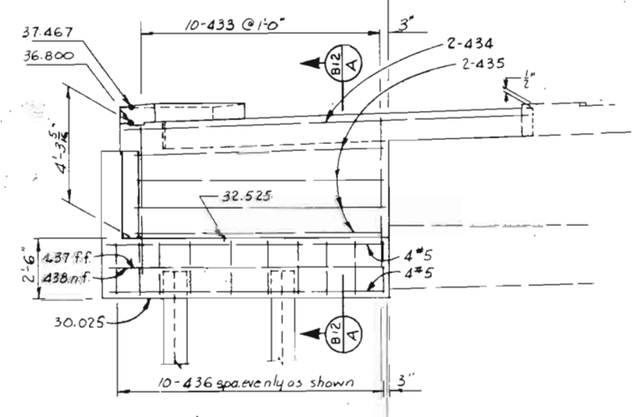

ELEVATION – ABUT 4
EAST SIDE WIDENING – STR. NO. F-16-EG

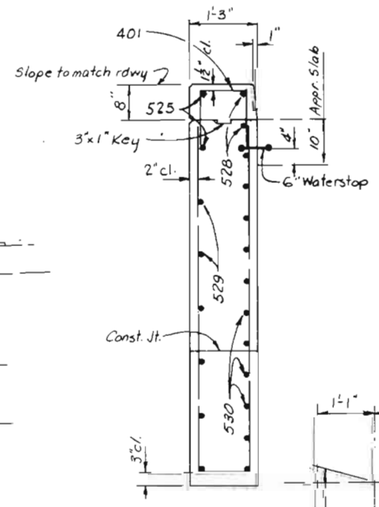

SECTION B12/B

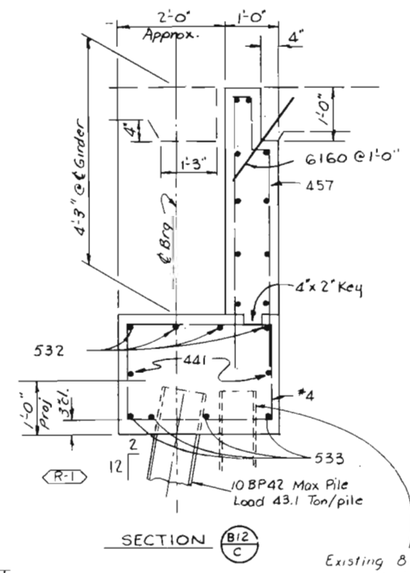

SECTION B12/C

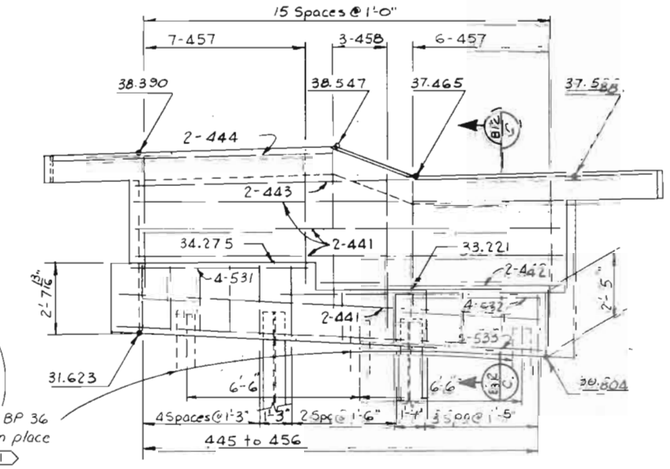

ELEVATION – ABUT 4
MEDIAN

Existing 8 BP 36 to remain in place
R-1

For MEDIAN REMOVAL DETAIL see Drawing No. B 10

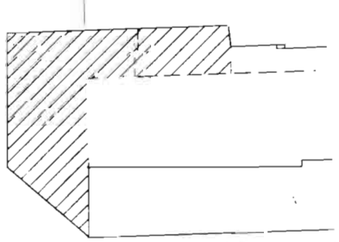

Save all protruding reinforcing for dowels into new portion.
Equipment used in removal shall be approved by the engr.

WING REMOVAL DETAIL

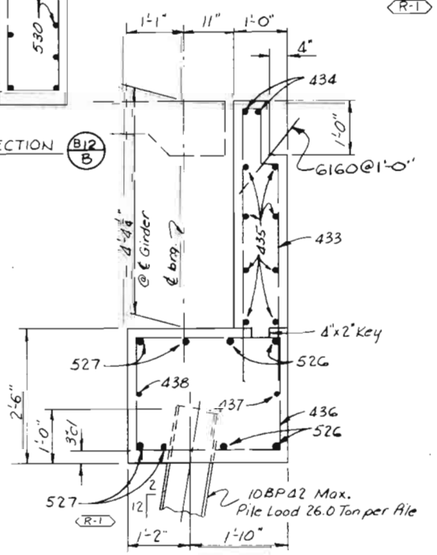

SECTION B12/A

Notes:
Dimensions and Elevations are at the back face of abut. unless otherwise noted.
Wingwalls and Abutments shall be poured monolithically up to const. jt.
All reinforcing shall be 2" cl. unless noted otherwise.

INITIAL	DATE	CHECKED BY	DATE
J.L.B.	5-71	J.H.R.	2-72
		M.L.R.	2-72
R.R.A.	11-8-71	E.H.H.	2-72
		M.L.R.	2-72

DESIGNED BY / CHECKED BY / DETAILED BY / QUANTITIES BY / CHECKED BY

DIVISION OF HIGHWAYS

DETAILS – ABUTMENT 4
EAST SIDE WIDENING
MEDIAN

Approved:
Bridge Engineer
Date:

Designer: J.L. Barber Detailer: R. Akin
Structure Numbers: F-16-EG, F-16-EH
DWG. No. B12 OF 66

DIVISION OF HIGHWAYS — STATE OF COLORADO
BDW FORM NO. 117
JULY 1968

FEDERAL ROAD REGION NO.	DISTRICT	PROJ. NO.	SHEET NO.	TOTAL SHEETS
VIII	COLORADO	I 25-2(91) 209	82	

REVISIONS			
R-1	8-25-72	Battered piling per C.O.# 04683	TCF

AS CONSTRUCTED
NO REVISIONS
Date Completed 6-28-74

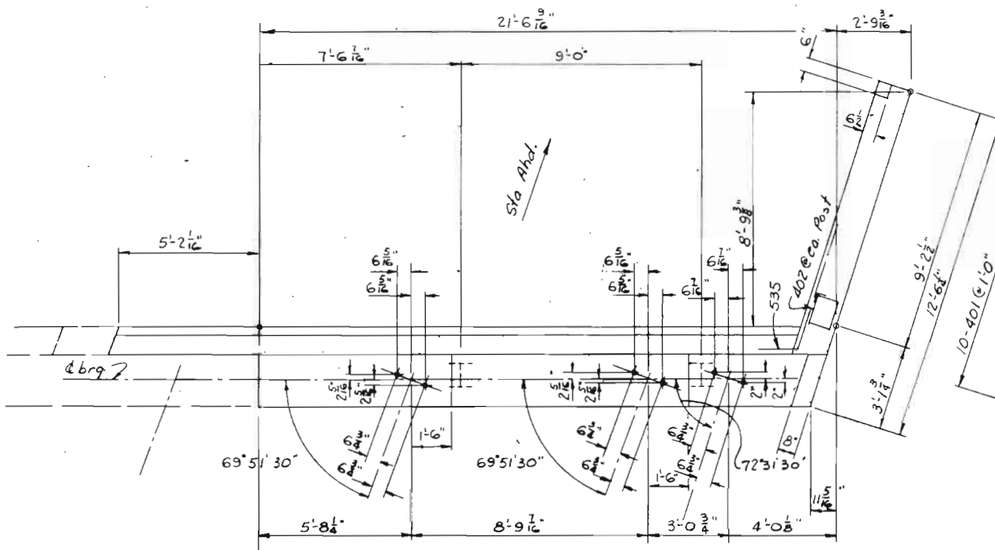

PLAN – ABUT 4
WEST SIDE WIDENING – STR. NO. F-16-EH

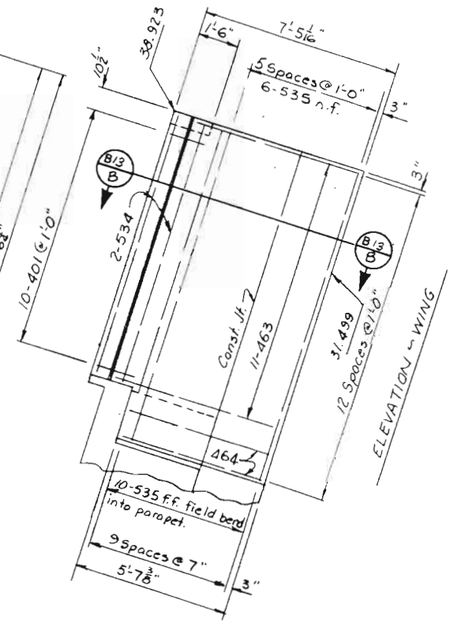

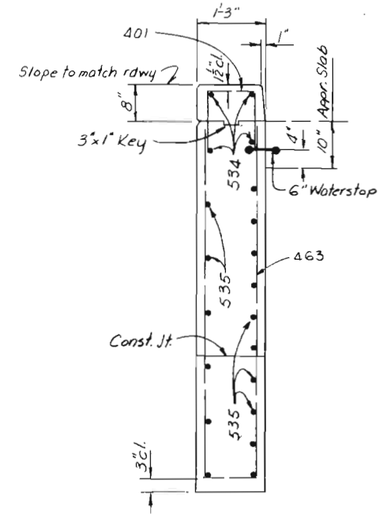

SECTION B13/B

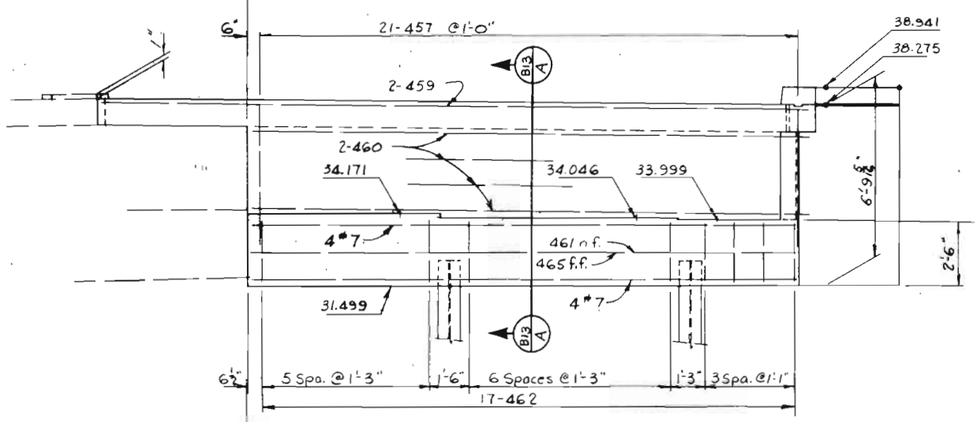

ELEVATION – ABUT 4
WEST SIDE WIDENING – STR NO F-16-EH

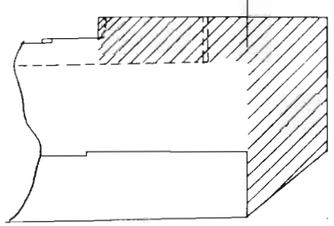

Save all protruding reinforcing for dowels into new construction. Equipment used in removal shall be as approved by the engineer.

WING REMOVAL DETAIL

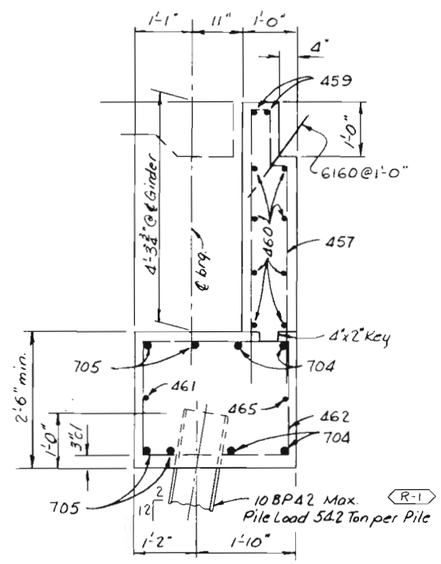

SECTION B13/A

Notes:
Dimensions and Elevations are at the backface of abut. unless noted otherwise.
Wingwalls and Abutment shall be poured monolithically up to const. joints.
All reinforcing shall be 2" cl. unless noted otherwise.

	INITIAL	DATE
DESIGNED BY	J.L.B.	9-71
CHECKED BY		
DETAILED BY	R.R.A.	VI-23-71
CHECKED BY	EHH	2-72
QUANTITIES BY	MLR	2-72
CHECKED BY	EHH	2-72
CHECKED BY	MLR	2-72

DIVISION OF HIGHWAYS

DETAILS – ABUTMENT 4
WEST SIDE WIDENING

Approved:	Designer: J.L. Barber / Detailer: R. Akin
Bridge Engineer	Structure Numbers F-16-EH
Date:	DWG. No. B13 OF 26

STATE DEPARTMENT OF HIGHWAYS
DIVISION OF HIGHWAYS — STATE OF COLORADO
DOH FORM NO. 1171
JULY 1966

FEDERAL ROAD REGION NO.	DISTRICT	PROJ. NO.	SHEET NO.	TOTAL SHEETS
VIII	COLORADO	I 25-2(91)209	83	

REVISIONS

AS CONSTRUCTED WITH REVISIONS
Date Completed 6-28-74

	INITIAL	DATE		
DESIGNED BY	J.L.B.	5-71	CHECKED BY	EHH 2-72
CHECKED BY				MLR 2-72
DETAILED BY	R.R.A.	9-17-71	QUANTITIES BY	EHH 2-72
			CHECKED BY	MLR 2-72

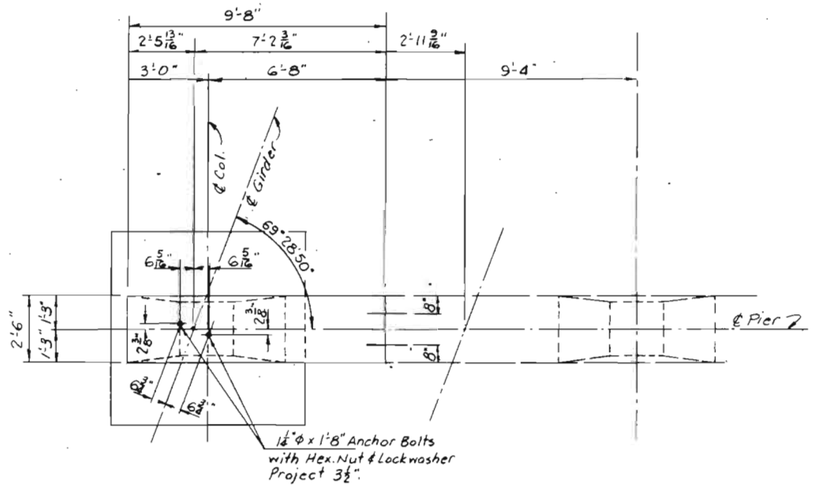

PLAN – PIER 2 or 3
EAST SIDE WIDENING – STR NO. F-16-EG

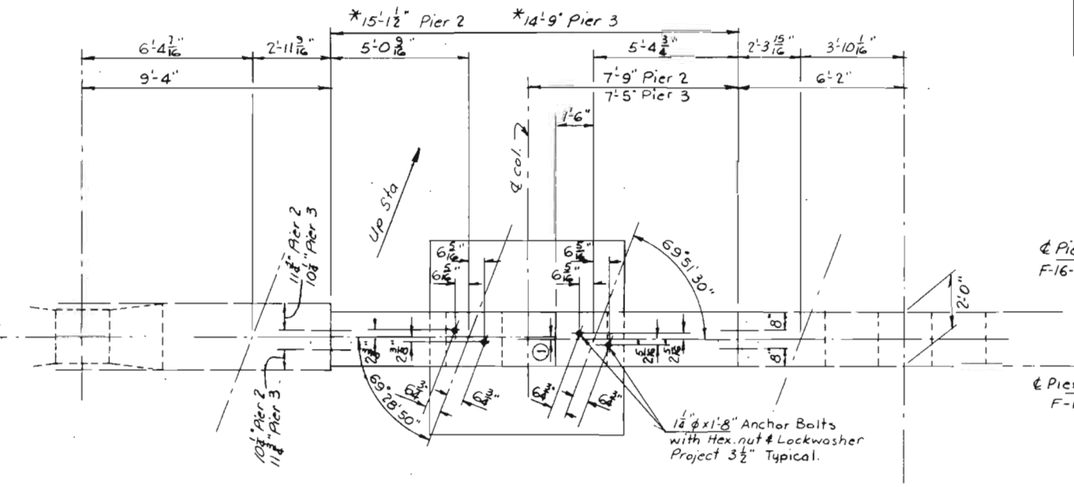

PLAN – PIER 2 or 3
MEDIAN

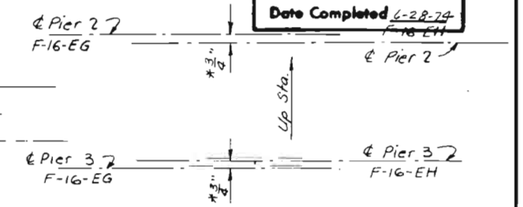

CENTERLINE OFFSET DIMENSIONS (1)

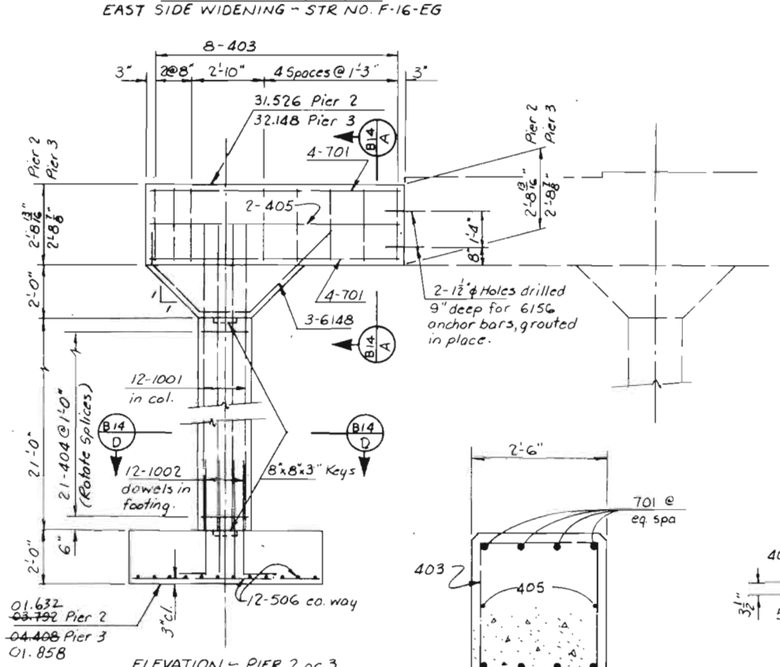

ELEVATION – PIER 2 or 3
EAST SIDE WIDENING – STR. NO. F-16-EG

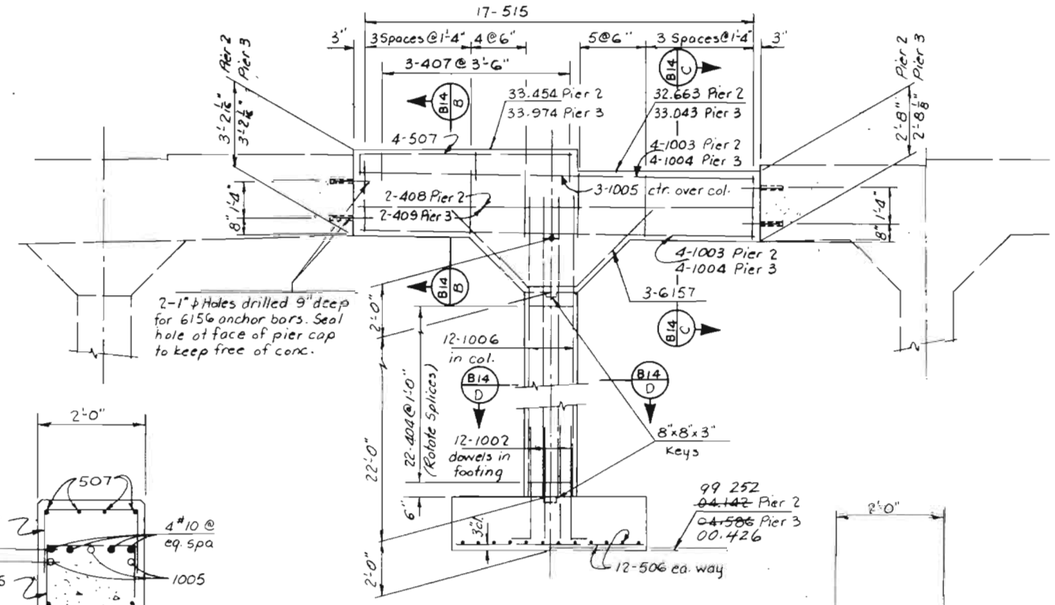

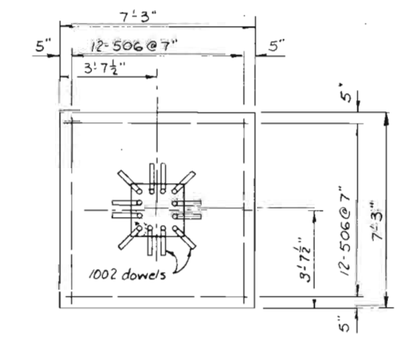

TYPICAL FOOTING PLAN

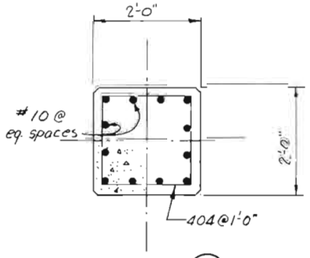

SECTION B14 D

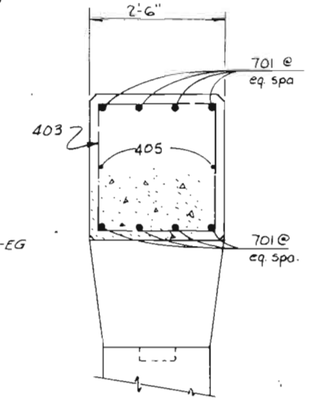

SECTION B14 A

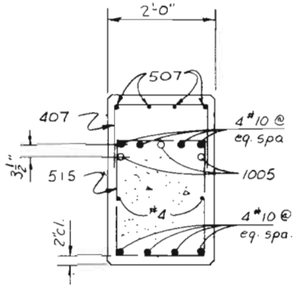

SECTION B14 B

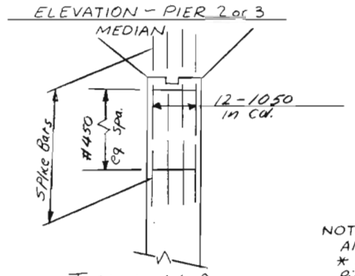

ELEVATION – PIER 2 or 3
MEDIAN

Typical All Piers
Column lengthened due to bad soil

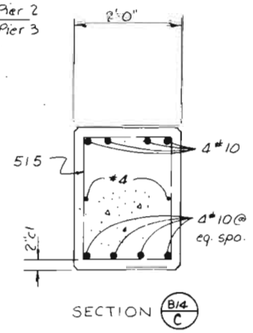

SECTION B14 C

NOTE
All reinforcing is 2" cl. unless otherwise noted.
* Approximate Dimensions.
Pier Cap conc. to be Class D (Bridge)
Installation of 6156 anchor bars to be included in Item 601, Concrete Class D (Bridge).

DIVISION OF HIGHWAYS

DETAILS – PIERS 2 & 3
EAST SIDE WIDENING – F-16-EG
MEDIAN WIDENING

Approved:
Bridge Engineer
Date:

Designer: J.L. Barber
Detailer: R. Akin
Structure Numbers: F-16-EG, F-16-EH
DWG. No. B 14 OF 26

FEDERAL ROAD REGION NO.	DISTRICT	PROJ. NO.	SHEET NO.	TOTAL SHEETS
VIII	COLORADO	I 25-2(91)209	84	

REVISIONS

AS CONSTRUCTED WITH REVISIONS
Date Completed 6-28-74

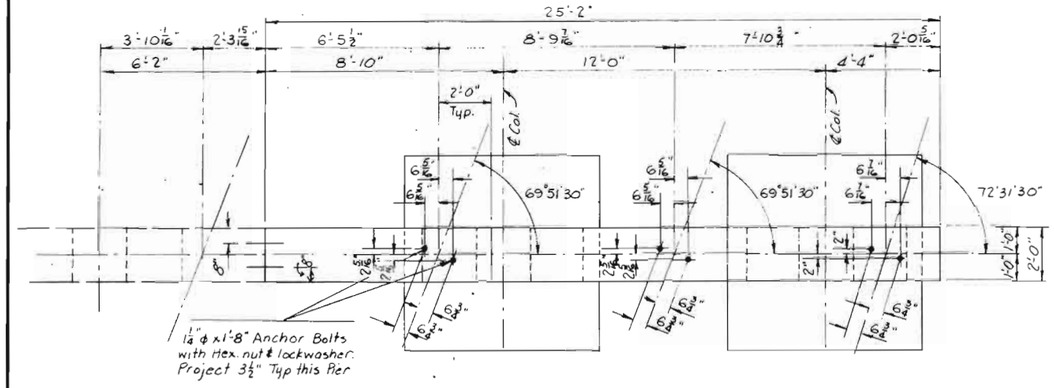

PLAN – PIER 2
WEST SIDE WIDENING – STR. NO F-16-EH

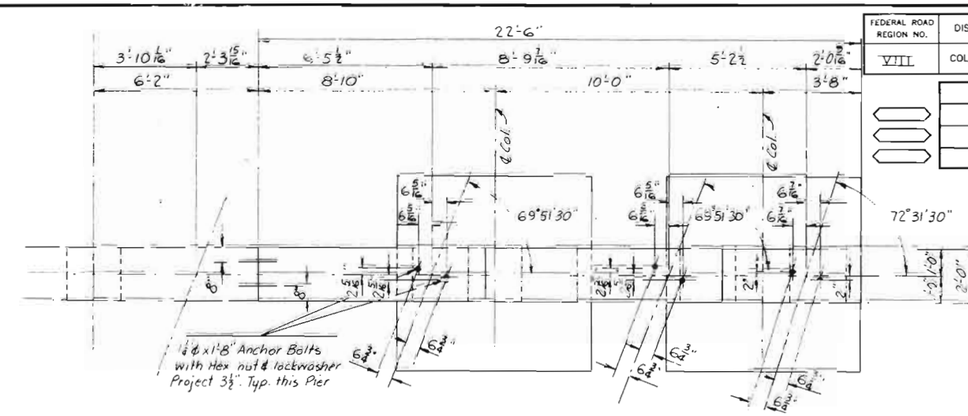

PLAN – PIER 3
WEST SIDE WIDENING – STR. NO. F-16-EH

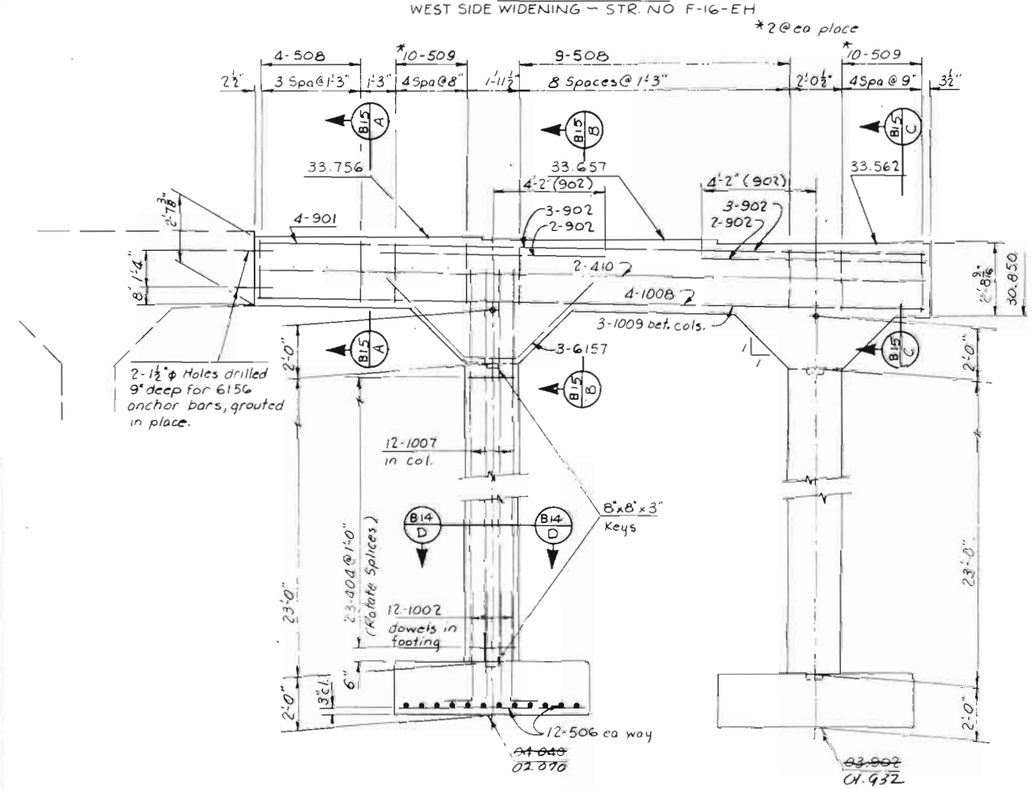

ELEVATION – PIER 2
WEST SIDE WIDENING – STR NO F-16-EH

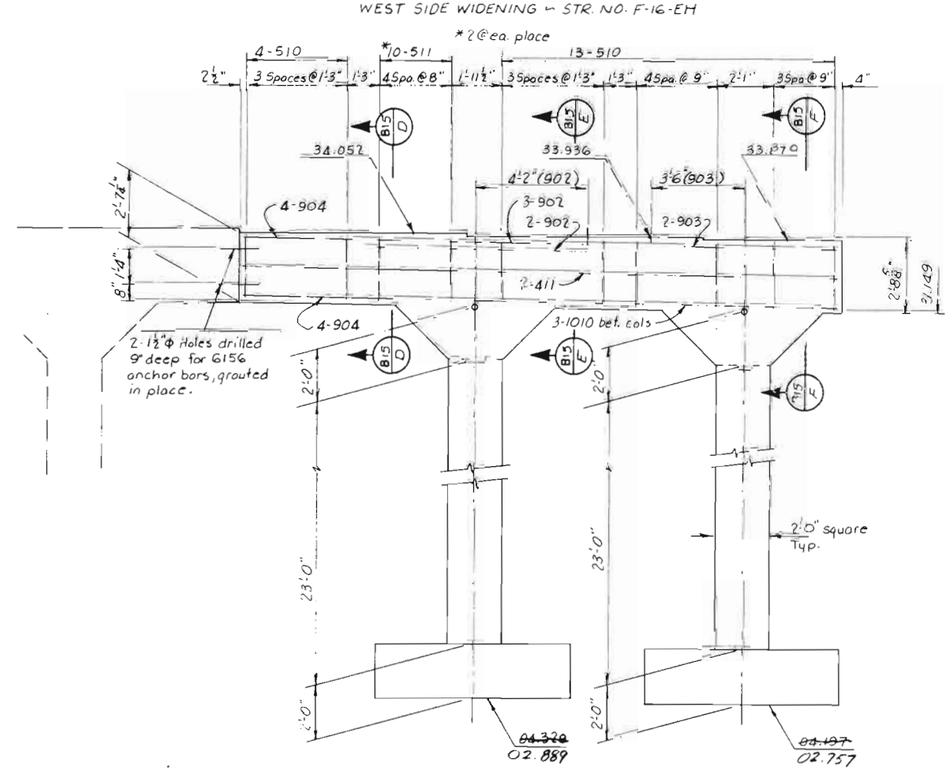

ELEVATION – PIER 3
WEST SIDE WIDENING – STR. NO. F-16-EH

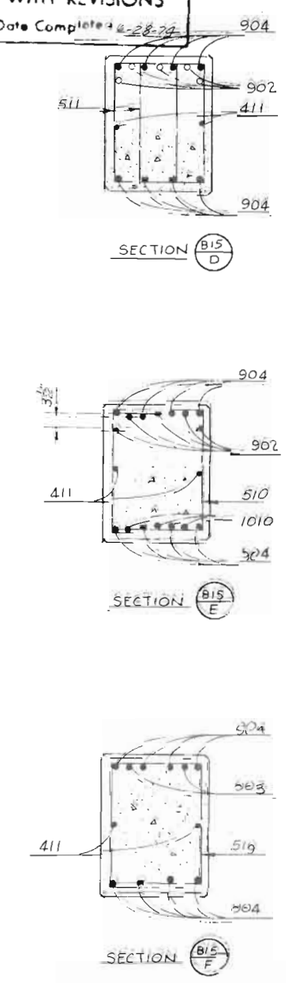

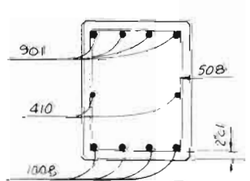

SECTION B15 A

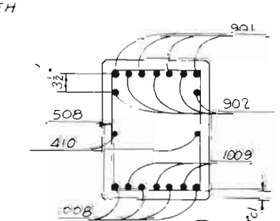

SECTION B15 B

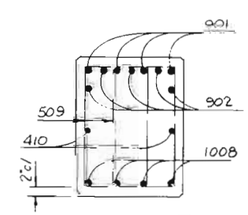

SECTION B15 C

Note: Column details are similar all columns on this sheet.
For Footing details see Dwg No. B 14
Reinforcing shall be 2" cl. unless noted otherwise.
Pier Cap Conc. to be Class D (Bridge)

	INITIAL	DATE
DESIGNED BY	J.L.B.	5-71
CHECKED BY		
DETAILED BY	R.R.A.	9-27-71
CHECKED BY	MLR	2-72
QUANTITIES BY	EHH	2-72
CHECKED BY	MLR	2-72

DIVISION OF HIGHWAYS

DETAILS – PIERS 2 & 3
WEST SIDE WIDENING – F-16-EH

Approved:
Bridge Engineer
Date:

Designer: J. L. Barber | Detailer: R. Akin
Structure Numbers: F-16-EH
DWG. No. B 15 OF 26

FEDERAL ROAD REGION NO.	DISTRICT	PROJ. NO.	SHEET NO.	TOTAL SHEETS
VIII	COLORADO	I 25-2(91)209	85	

REVISIONS

AS CONSTRUCTED NO REVISIONS 06-29-74

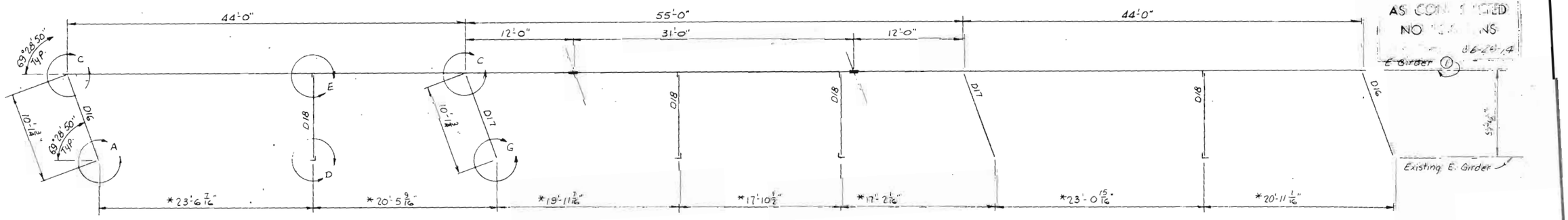

FRAMING PLAN – EAST SIDE WIDENING – STR. NO. F-16-EG

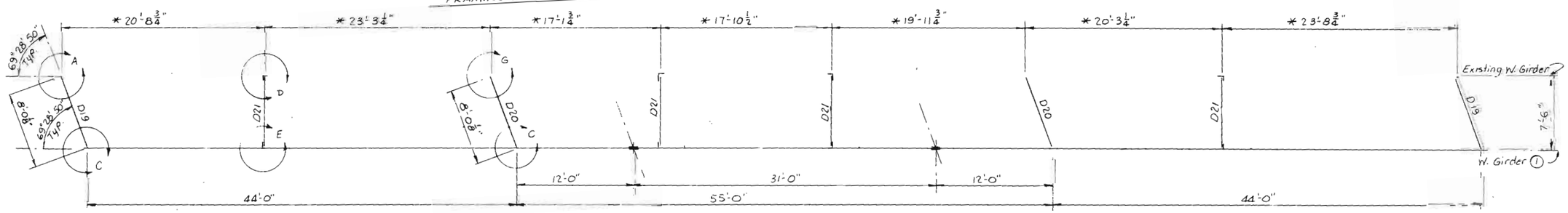

FRAMING PLAN – WEST SIDE WIDENING – STR. NO. F-16-EG

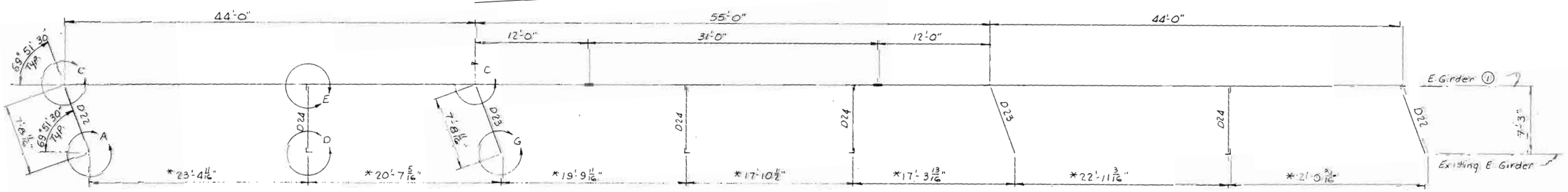

FRAMING PLAN – EAST SIDE WIDENING – STR. NO. F-16-EH

Dimensions marked thus * are from as constructed plans and are to ℄ holes in existing girder webs. Verify before fabrication.

Details A, C, D, E & G similar to Details on Dwg Nº B-17

For Girder Details see Dwg Nº B-17

	INITIAL	DATE
DESIGNED BY	J.L.B.	6-71
CHECKED BY	R.R.A.	8-3-71
DETAILED BY	EHH	2-72
CHECKED BY	MLR	2-72
QUANTITIES BY	EHH	2-72
CHECKED BY	MLR	2-72

DIVISION OF HIGHWAYS

FRAMING PLANS

Approved:

Bridge Engineer

Date:

Designer: J.L. Barber Detailer: R.A. Kim

Structure Number: F-16-EH F-16-EG

DWG. No. B.16 OF 26

FEDERAL ROAD REGION NO.	DISTRICT	PROJ. NO.	SHEET NO.	TOTAL SHEETS
VIII	COLORADO	I 25-2(91) 209	86	

REVISIONS		

AS CONSTRUCTED
NO REVISIONS
Date Completed 6-28-74

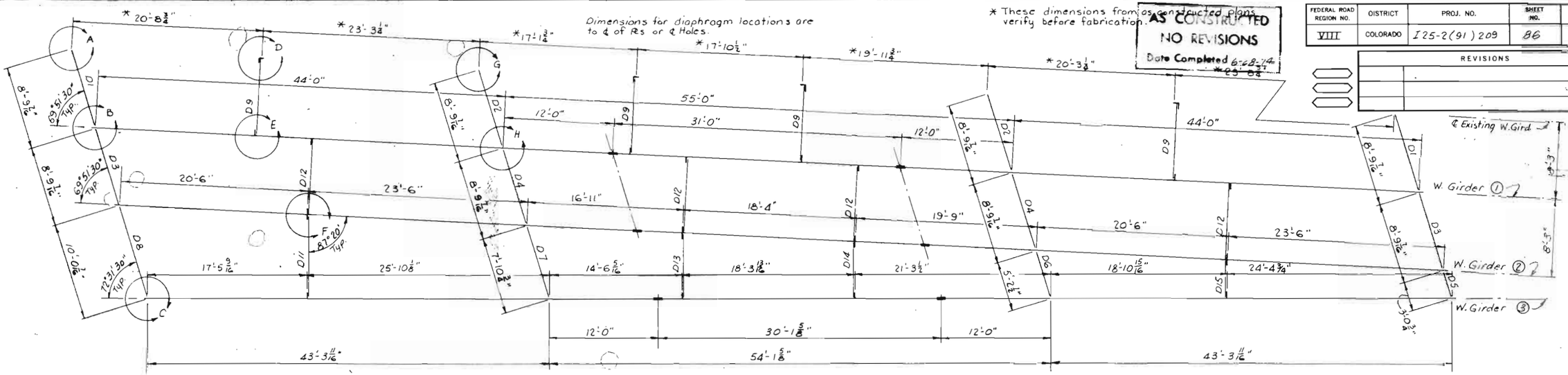

FRAMING PLAN – WEST SIDE WIDENING – STR. NO. F-16-EH

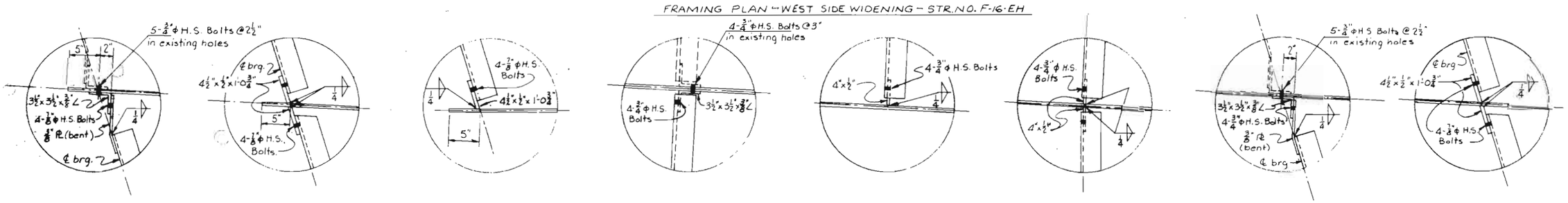

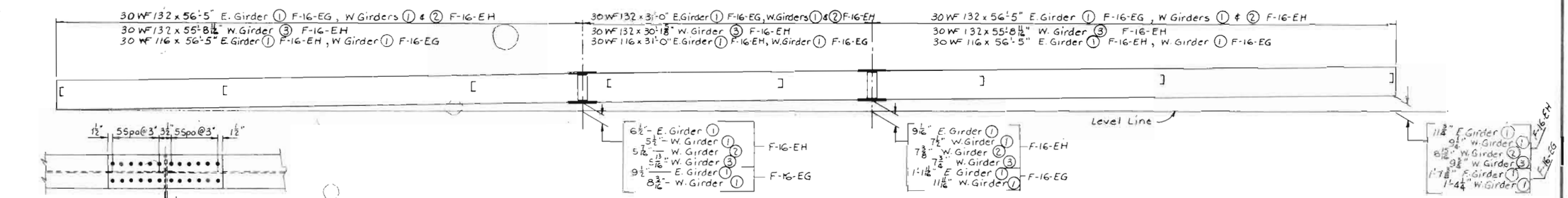

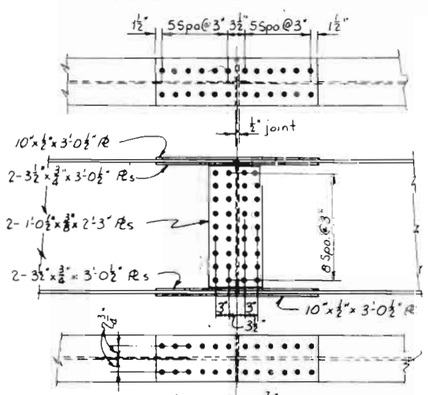

All splice bolts shall be 7/8" ϕ H.S.

FIELD SPLICE DETAIL

	INITIAL	DATE	CHECKED BY	DATE
DESIGNED BY	JLB	6-71	EHH	2-72
CHECKED BY			MLR	2-72
DETAILED BY	RRA	7-29-71	EHH	2-72
			MLR	2-72

DIVISION OF HIGHWAYS

FRAMING PLAN WEST SIDE
FIELD SPLICE DETAIL
GIRDER DETAIL & BLOCKING DIAGRAM

Approved:
Bridge Engineer
Date:

Designer: J.L. Barber | Detailer: R. Akin
Structure Numbers: F-16-EH & F-16-EG
DWG. No. B.17 OF 26

FEDERAL ROAD REGION NO.	DISTRICT	PROJ. NO.	SHEET NO.	TOTAL SHEETS
VIII	COLORADO	I 25-2(91)209	87	

REVISIONS		

AS CONSTRUCTED WITH REVISIONS
Date Completed 6-28-74

Coat all cut surfaces, unless otherwise noted, with epoxy bonding material. Epoxy shall be incl. in the Bid Price of Item 601, Concrete, Class "D".

Equipment used in removing portions of existing structure shall be approved by the engineer

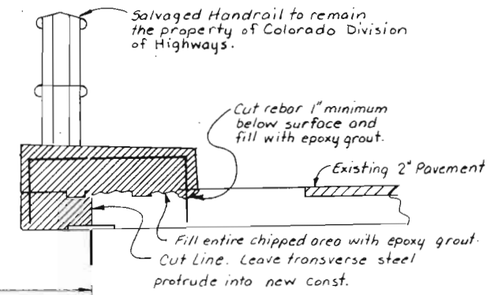

SLAB CUTTING DETAIL
(Similar all four exterior girders.)

Note:
Concrete deck finish shall be left in a roughened condition so as to accept and aid in bonding the Bituminous Overlay.

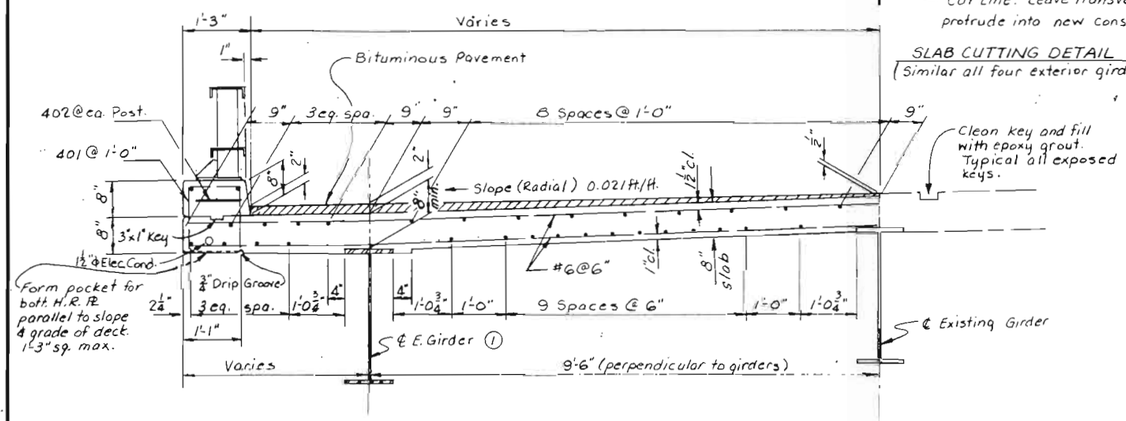

TYPICAL SECTION – EAST SIDE WIDENING
STR Nº F-16-EG

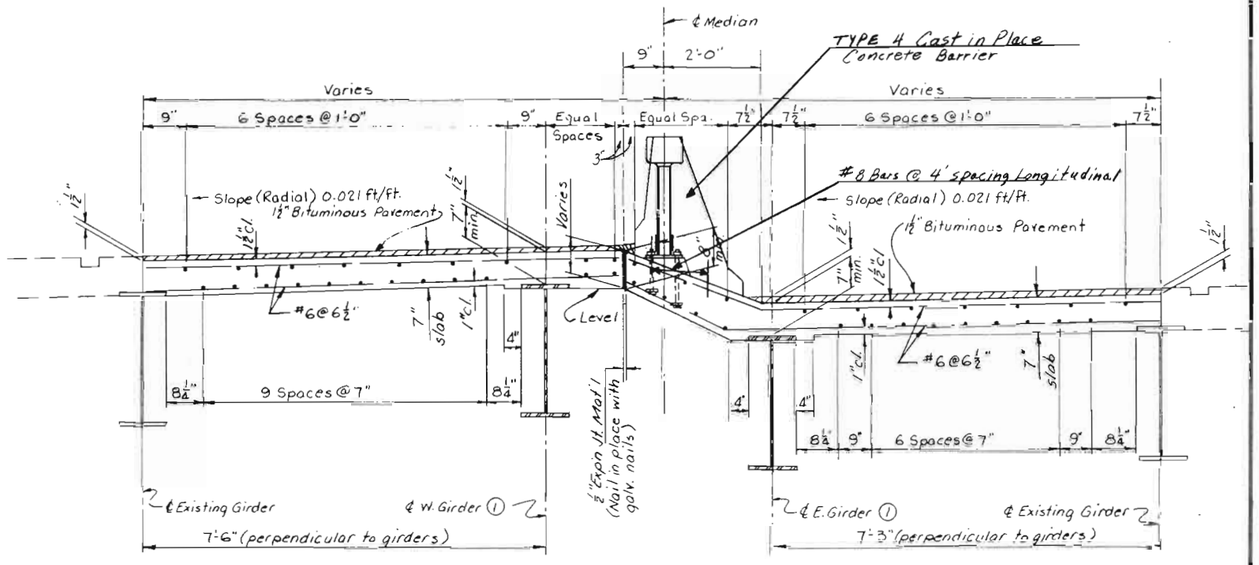

TYPICAL SECTION – WEST SIDE WIDENING
STR Nº F-16-EG

TYPICAL SECTION – EAST SIDE WIDENING
STR Nº F-16-EH

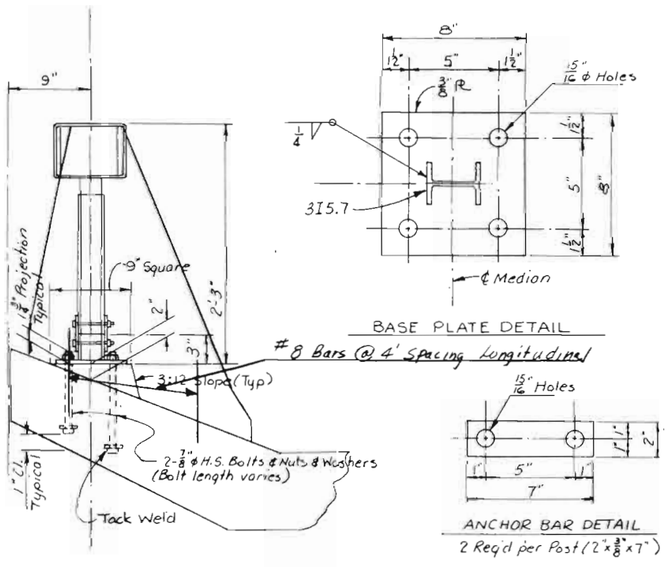

MEDIAN RAILING DETAILS
For details & dimensions not shown here see Standard M-606-B, GUARD RAIL-Type 4 Concrete Barrier Cast in Place

	INITIAL	DATE			
DESIGNED BY	J.L.B.	5-71	CHECKED BY	EHH	2-72
CHECKED BY			QUANTITIES BY	MKR	2-72
DETAILED BY	R.R.A.	8-20-71	CHECKED BY	EHH	2-72
				MKR	2-72

DIVISION OF HIGHWAYS

SUPERSTRUCTURE SECTIONS

MEDIAN BARRIER

Approved:	Designer: J. Barber	Detailer: R. Akin
Bridge Engineer	Structure Numbers	F-16-EG
Date:		F-16-EH
	DWG. No. B18	OF 26

FEDERAL ROAD REGION NO.	DISTRICT	PROJ. NO.	SHEET NO.	TOTAL SHEETS
VIII	COLORADO	I 25-2(91)209	88	

REVISIONS		

AS CONSTRUCTED
NO REVISIONS
Date Completed 6-28-74

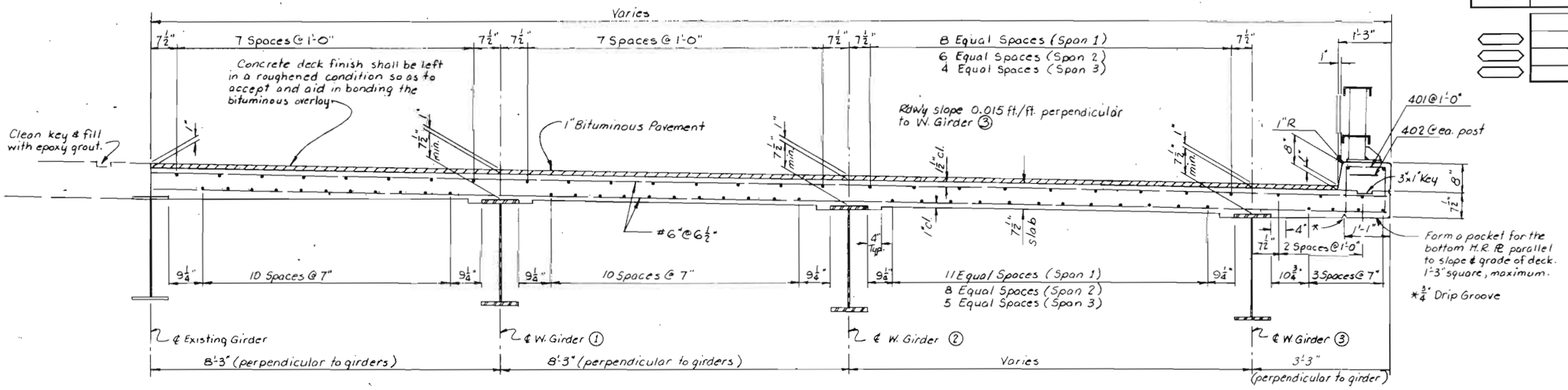

TYPICAL SECTION — WEST SIDE WIDENING
STR. Nº F-16-EH

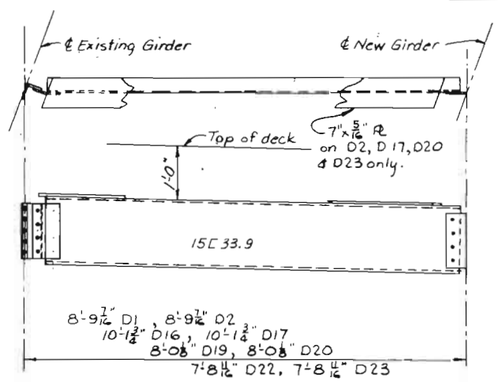

DETAIL BEARING DIAPHRAGMS

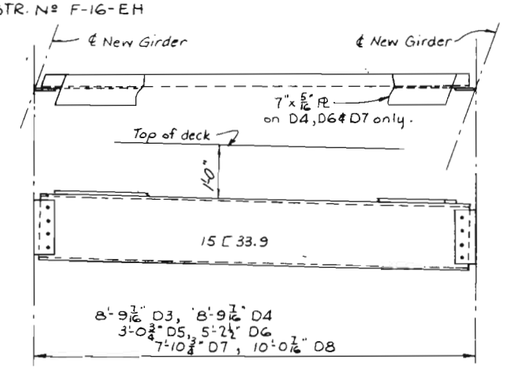

DETAIL BEARING DIAPHRAGMS

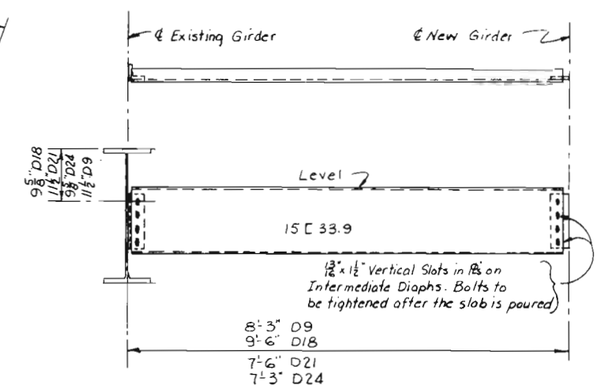

DETAIL INTERMEDIATE DIAPHRAGM

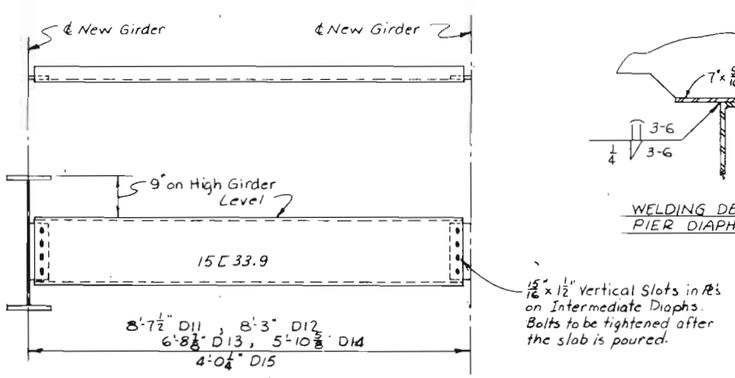

DETAIL INTERMEDIATE DIAPHRAGM

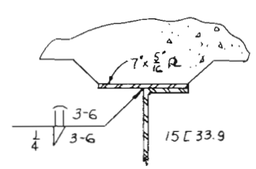

WELDING DETAIL @ PIER DIAPHRAGM

NOTE:
Flanges of all diaphragms to face ℄ of Span 2.

INITIAL	DATE		
DESIGNED BY	J.L.B.	4-71	CHECKED BY
CHECKED BY			QUANTITIES BY
DETAILED BY	R.R.A.	8-30-71	CHECKED BY

	EHH	2-72
	MLR	2-72
	EHH	2-72
	MLR	2-72

DIVISION OF HIGHWAYS

SUPERSTRUCTURE SECTION
DIAPHRAGM DETAILS

Approved:	Designer: J.L. Barber	Detailer: R. Akin
Bridge Engineer	Structure Numbers	F-16-EH
Date:		F-16-EG
	DWG. No. B.19	OF 26

FEDERAL ROAD REGION NO.	DISTRICT	PROJ. NO.	SHEET NO.	TOTAL SHEETS
VIII	COLORADO	I 25-2(91)209	89	

REVISIONS

AS CONSTRUCTED
NO REVISIONS
Date Completed 6-28-74

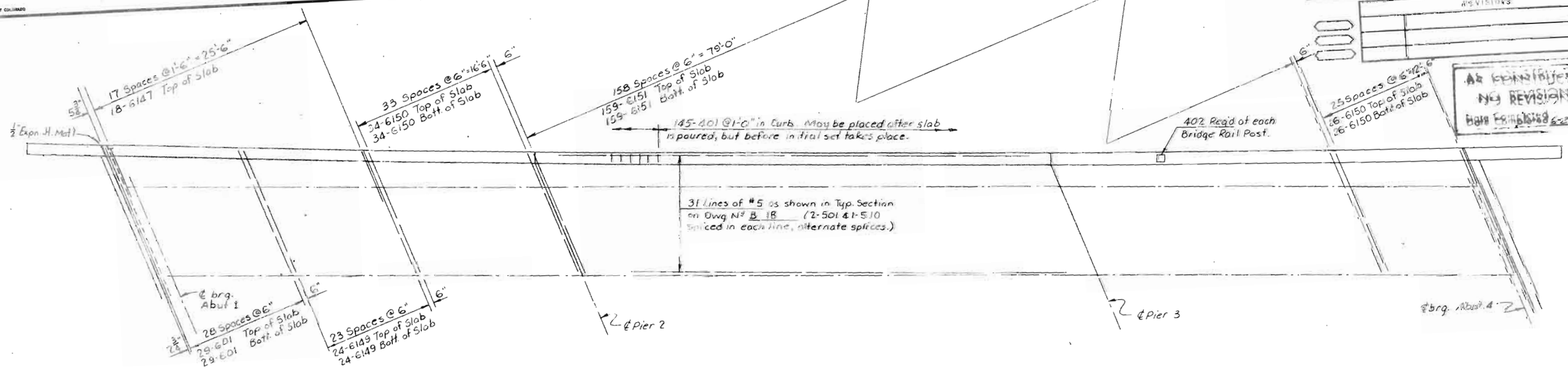

REINFORCING PLAN
EAST SIDE WIDENING – STR NO. F-16-EG

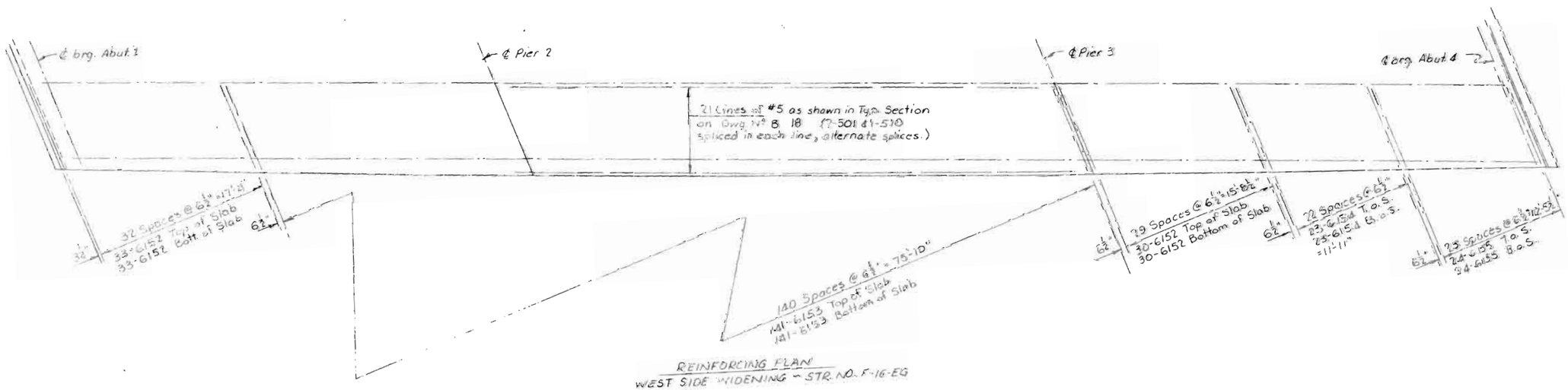

REINFORCING PLAN
WEST SIDE WIDENING – STR. NO. F-16-EG

	INITIAL	DATE		INITIAL	DATE
DESIGNED BY	J.L.B.	5-71	CHECKED BY	E.H.H.	2-72
CHECKED BY			QUANTITIES BY	M.L.R.	2-72
DETAILED BY	R.R.A.	8-30-71	CHECKED BY	E.H.H.	2-72
				M.L.R.	2-72

DIVISION OF HIGHWAYS

SUPERSTRUCTURE
REINFORCING

Approved:
Bridge Engineer
Date:

Designer: J.L. Barber | Detailer: R. Akin
Structure Numbers: F-16-EG

DWG. No. B20 OF 26

FEDERAL ROAD REGION NO.	DISTRICT	PROJ. NO.	SHEET NO.	TOTAL SHEETS
VIII	COLORADO	I 25-2(91)209	90	

REVISIONS

AS CONSTRUCTED
NO REVISIONS
Date Completed

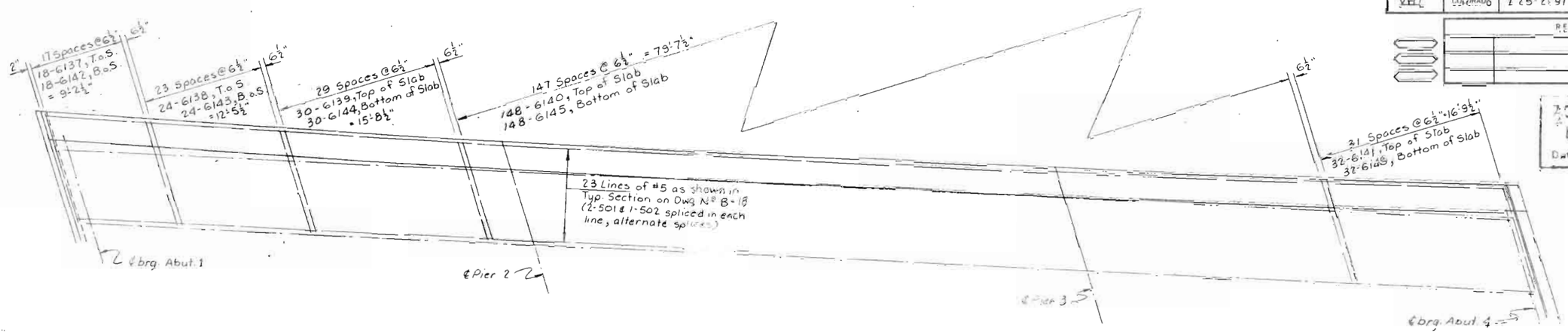

REINFORCING PLAN
EAST SIDE WIDENING – STR NO. F-16-EH

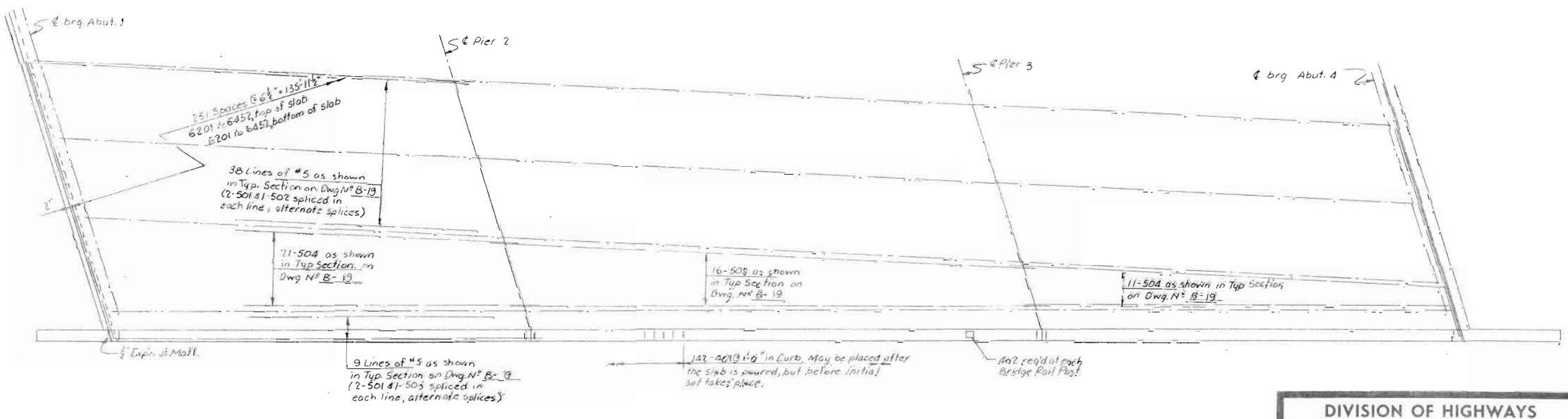

REINFORCING PLAN
WEST SIDE WIDENING – STR NO. F-16-EH

	INITIAL	DATE			
DESIGNED BY	J.L.B.	5-71	CHECKED BY	EHH	2-72
CHECKED BY			QUANTITIES BY	MLR	2-72
DETAILED BY	RRA	9-8-71	CHECKED BY	EHH	2-72
				MLR	2-72

DIVISION OF HIGHWAYS

SUPERSTRUCTURE
REINFORCING

Approved:	Designer: J.L. Barber	Detailer: R. Akin
Bridge Engineer	Structure Numbers: F-16-EH	
Date:	DWG. No. B 21	OF 26

FEDERAL ROAD REGION NO.	DISTRICT	PROJ. NO.	SHEET NO.	TOTAL SHEETS
VIII	COLORADO	I 25-2(91) 209	91	

REVISIONS			
R-1	8-25-72	Added expansion device per C.O. # 04683 (New Sheet)	TCF

AS CONSTRUCTED
NO REVISIONS
Date Completed 6-28-74

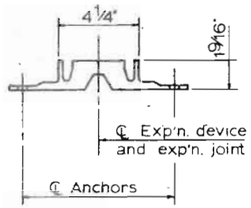

(TYPE 1)

Outside Temp.	Dim "A" (Min.)
30°	1 5/8"
40°	1 1/2"
50°	1 3/8"
60°	1 1/4"
70°	1 1/8"
80°	1"
90°	7/8"
100°	3/4"

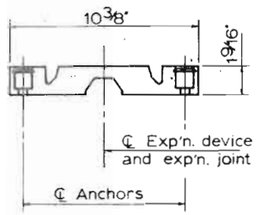

(TYPE 2)

Outside Temp.	Dim. "A" (Min.)
30°	2 1/4"
40°	2 1/8"
50°	2"
60°	1 7/8"
70°	1 5/8"
80°	1 1/2"
90°	1 3/4"
100°	1 1/4"

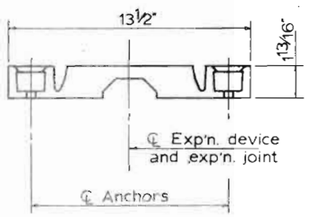

(TYPE 3)

Outside Temp.	Dim. "A" (Min.)
30°	2 3/4"
40°	2 5/8"
50°	2 1/2"
60°	2 3/8"
70°	2 1/8"
80°	2"
90°	1 3/4"
100°	1 5/8"

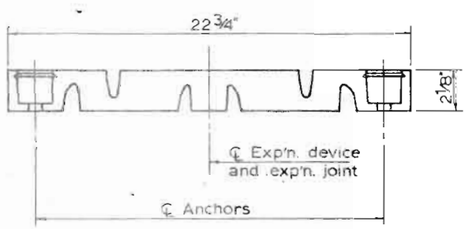

(TYPE 4)

Outside Temp.	Dim. "A" (Min.)
30°	4 3/8"
40°	4 1/8"
50°	3 7/8"
60°	3 5/8"
70°	3 1/4"
80°	3"
90°	2 3/4"
100°	2 1/2"

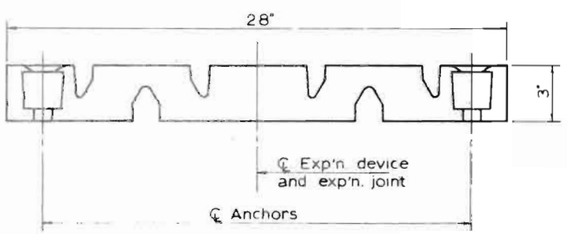

(TYPE 6)

Outside Temp.	Dim "A" (Min.)
30°	5 3/8"
40°	4 7/8"
50°	4 1/2"
60°	4"
70°	3 5/8"
80°	3 1/4"
90°	2 3/4"
100°	2 3/8"

DETAILS OF PREMOLDED BRIDGE EXPANSION DEVICES

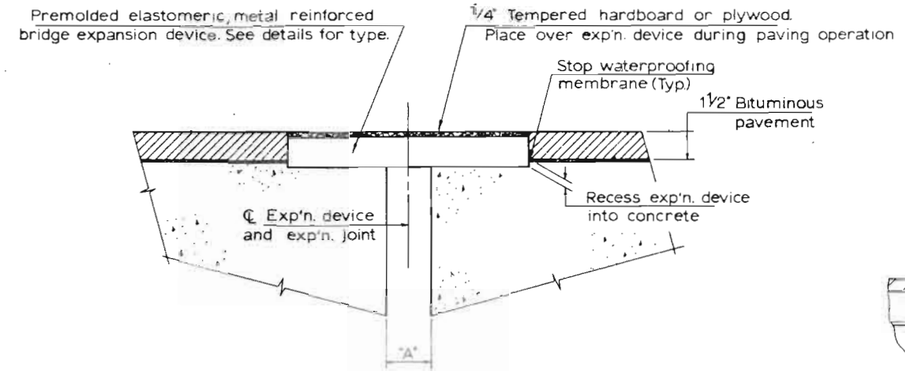

TYPICAL SECTION THRU EXPANSION JOINT

The expansion device will be installed the full width of the bridge. The device must be saw cut to fit the break in the median.

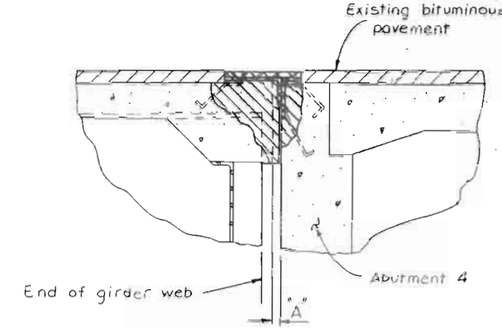

Detail for installation of the expansion device on the existing bridge.

Remove existing expansion device and shaded portions of bridge deck and abutment. Grout the abutment and deck to provide a seat for the expansion device and to maintain the "A" dimension. Trim the girder flanges where necessary to maintain the "A" dimension. All work to be included in Item 518 Bridge Expansion Device (Type 2).

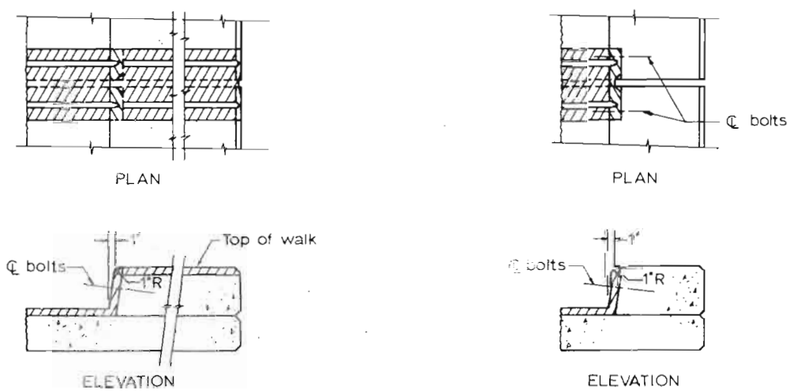

TYPICAL DETAILS OF WALK OR CURB

BDN 12-4-1978

DESIGNED BY	DATE	CHECKED BY
JLB	9-71	
CHECKED BY		QUANTITIES BY
DETAILED BY		CHECKED BY
BRL	8-72	

DIVISION OF HIGHWAYS

PREMOLDED BRIDGE EXPANSION DEVICE

Designer	J. Barber	Structure Numbers	F-16-EG
Detailer	R. Akin		F-16-EH
Drawing Number B 22		of 26	Drawings

30(9-1-72)

STATE DEPARTMENT OF HIGHWAYS
DIVISION OF HIGHWAYS – STATE OF COLORADO
FORM D.O.H. 117
JULY, 1968

FEDERAL ROAD REGION NO	DISTRICT	PROJ NO.	SHEET NO	TOTAL SHEETS
VIII	COLORADO	I 25-2(91)209	92	

REVISIONS

AS CONSTRUCTED WITH REVISIONS
Date Completed 6-28-74

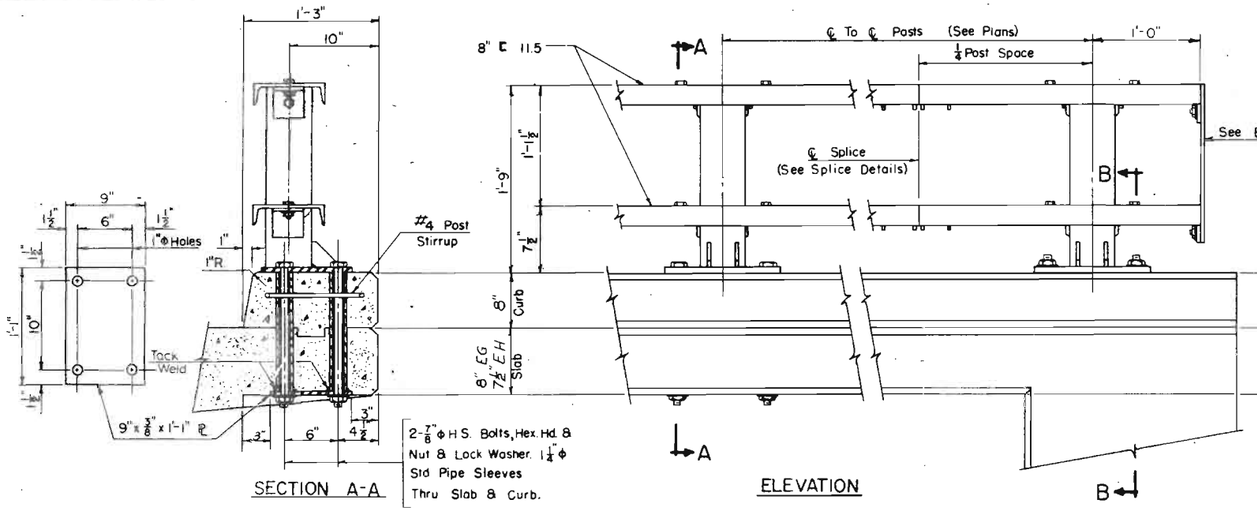

SECTION A-A

ELEVATION

THRU SLAB MOUNTED POST

No. Req'd. 22 Each Structure

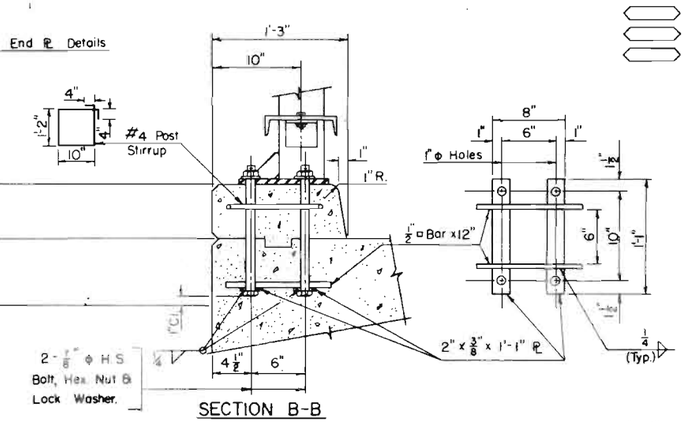

SECTION B-B

END ANCHORED POST

No. Req'd. 4 Each Structure

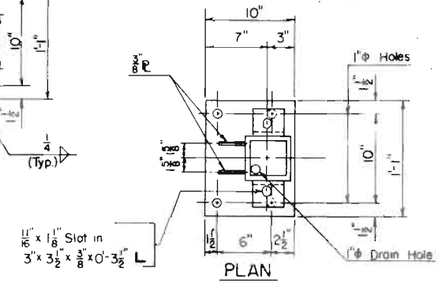

PLAN

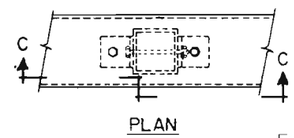

PLAN

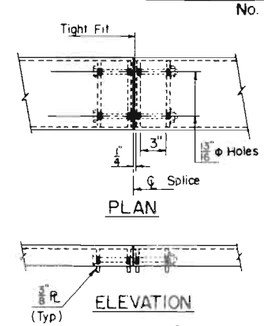

PLAN

ELEVATION

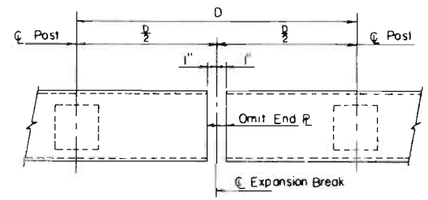

DETAIL AT EXPANSION BREAK

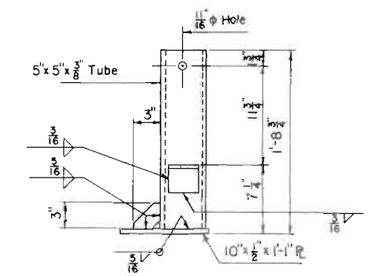

ELEVATION

POST DETAIL

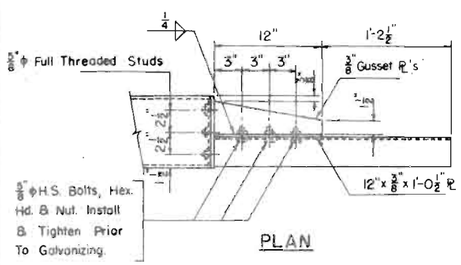

PLAN

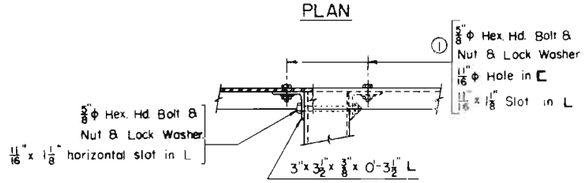

SECTION C-C

DETAIL AT TOP RAIL

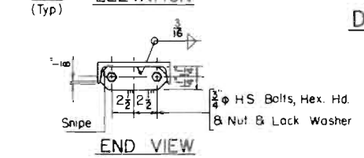

END VIEW

SPLICE DETAIL

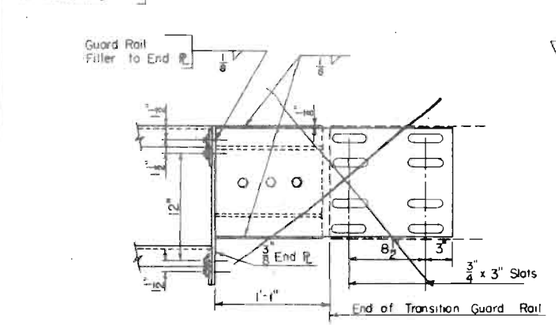

ELEVATION

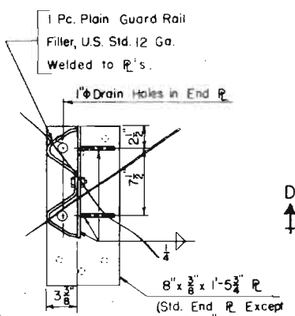

END VIEW

SEE DETAIL OF END CONNECTION FOR FASTENING BRIDGE RAIL TO TRANSITION GUARD RAIL For Type 5 Guard Rail

Complete Unit Shall Be Galvanized After Fabrication

Detail Shown is For Right Hand Rail. No. Req'd. 1 Each Structure

Opposite Hand For Left Hand Rail No. Req'd. 1 Each Structure

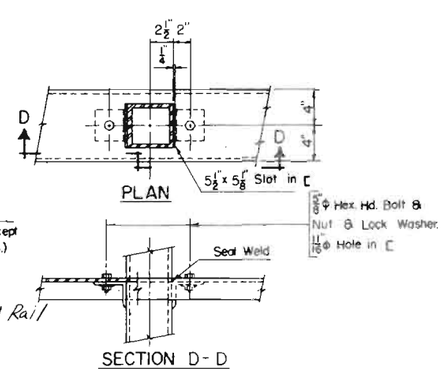

PLAN

SECTION D-D

DETAIL AT BOTTOM RAIL

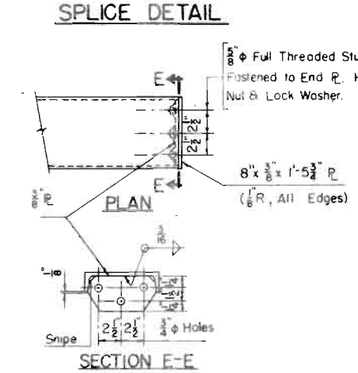

PLAN

SECTION E-E

END PLATE DETAIL

No. Req'd. 0

NOTES:

POSTS SHALL BE PERPENDICULAR TO GRADE AND SLOPE OF THE DECK.

ALL RAIL ELEMENTS, ANCHOR ASSEMBLIES, ANCHOR BOLTS, NUTS AND WASHERS SHALL BE GALVANIZED AFTER FABRICATION IN ACCORDANCE WITH THE SPECIFICATIONS.

A.I.S.I. 1100 STEEL RODS MAY BE USED IN LIEU OF H.S. BOLTS SHOWN. 10° WEDGE TEST NOT REQ. FOR EITHER BOLTS OR RODS USED IN RAIL ASSEMBLY.

① 5/8" Ø STANDARD FULL THREADED STUDS WELDED TO THE CHANNEL MAY BE USED. INCREASE SIZE OF SLOT IN THE ANGLE TO 13/16" X 1¼"

CHANNELS SHALL BE CONTINUOUS OVER 3 OR 4 POSTS BEFORE SPLICING.

WHEN THRU SLAB MOUNTED POSTS ARE USED, PRIOR TO SETTING THE POSTS AND TIGHTENING THE NUTS A PERIMETER BEAD OF CAULKING GRADE, POLYURETHANE JOINT SEALER, SHALL BE PLACED ON THE CONCRETE 1" INSIDE THE EDGES OF THE POST BASE PLATE.

DESIGNED BY		DATE	
CHECKED BY	RMM	8-68	
DETAILED BY	TGF	8-68	
CHECKED BY	EHH	2-72	
QUANTITIES BY	MRL	2-72	

DIVISION OF HIGHWAYS

BRIDGE RAIL TYPE 1

Approved:

Bridge Engineer

Date:

Designer: J. Barber Detailer: E. Hadley

Structure Numbers F-16-EG F-16-EH

DWG. No. B 23 OF 26

10 (9-1-71)

STATE DEPARTMENT OF HIGHWAYS
DIVISION OF HIGHWAYS - STATE OF COLORADO
FORM B O H 117
JULY 1964

FEDERAL ROAD REGION NO	DISTRICT	PROJ NO	SHEET NO	TOTAL SHEETS
VIII	COLORADO	I 25-2(91)209	93	

REVISIONS			
R-1	8-25-72	Revised "B" dimensions per C.O. #04683	TCF

AS CONSTRUCTED
NO REVISIONS
Date Completed 6-28-74

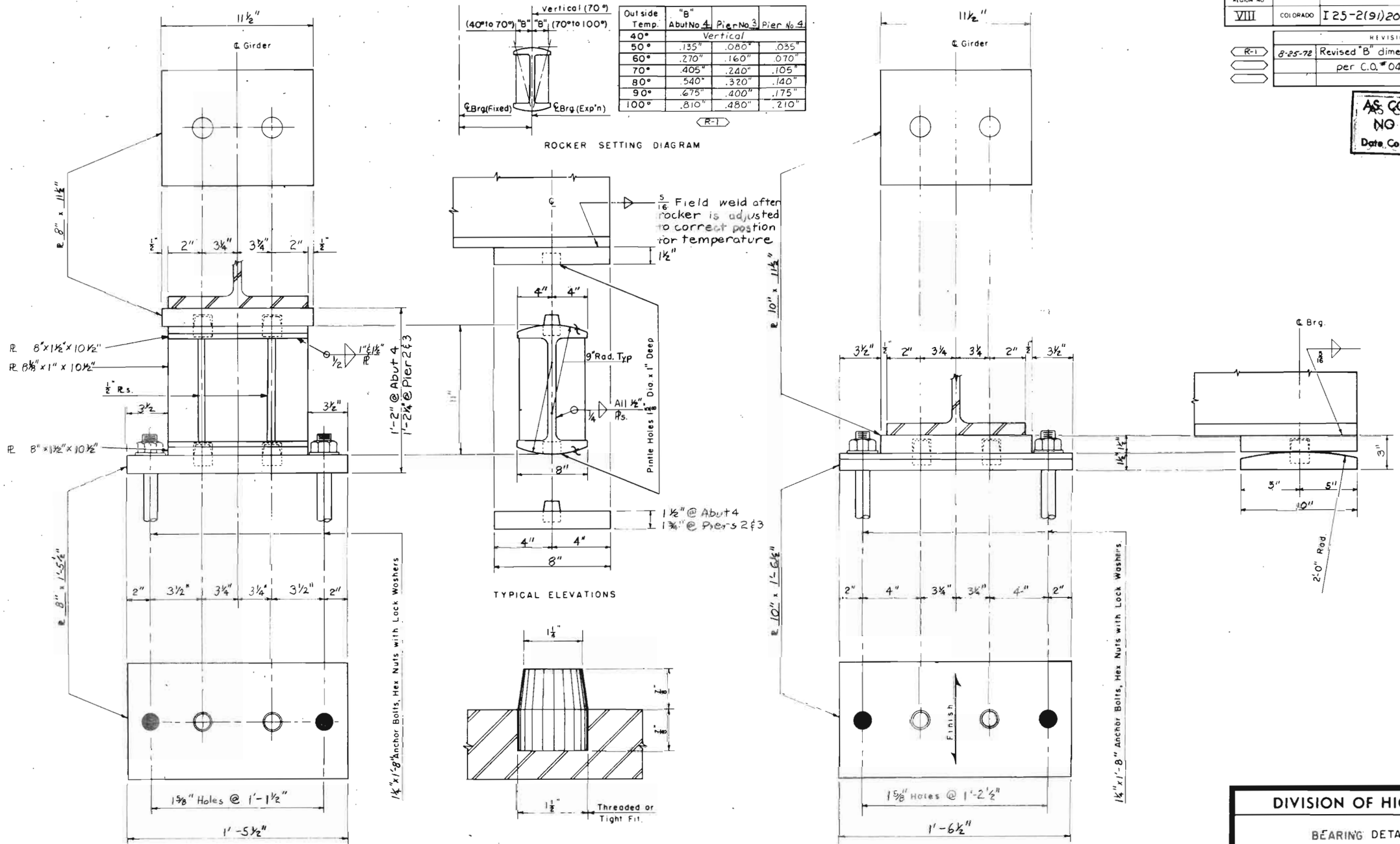

DETAILS OF BEARINGS

Rocker may be built from plates equal in thickness to designated WF Section or may be made from Cast Steel.

	INITIAL	DATE
DESIGNED BY	J.L.B.	5-71
CHECKED BY		
DETAILED BY	M.L.R.	2-72
CHECKED BY	EHH	2-72
QUANTITIES BY	MLR	2-72
CHECKED BY	EHH	2-72

DIVISION OF HIGHWAYS

BEARING DETAIL

Approved:
Bridge Engineer
Date.

Designer J.L. Barber Detailer Roseberry
Structure Numbers F-16-EG F-16-EH
DWG. No. B 24 OF 26

20(1-1-70)

STATE DEPARTMENT OF HIGHWAYS
DIVISION OF HIGHWAYS — STATE OF COLORADO
D.O.H. FORM NO. 117
JULY 1948

FEDERAL ROAD REGION NO.	DISTRICT	PROJ. NO.	SHEET NO.	TOTAL SHEETS
VIII	COLORADO	I25-2(91)209	94	

REVISIONS		

AS CONSTRUCTED WITH REVISIONS
Date Completed 6-28-74

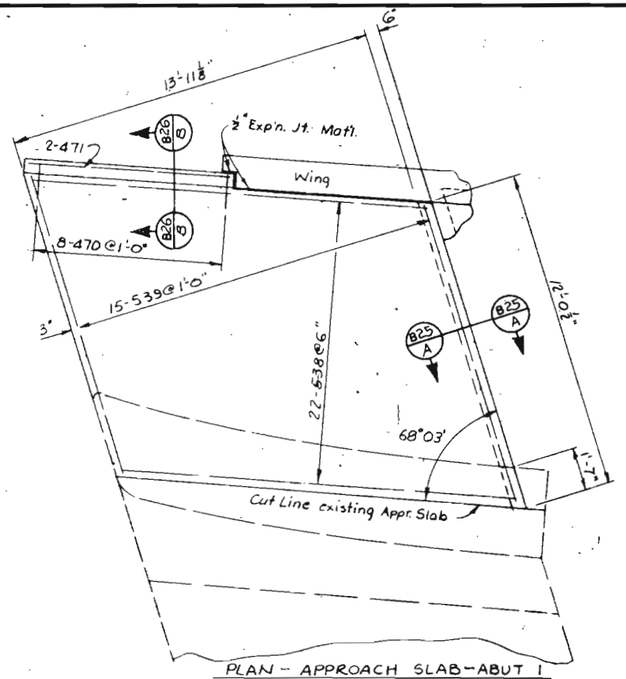

PLAN – APPROACH SLAB – ABUT 1
EAST SIDE WIDENING

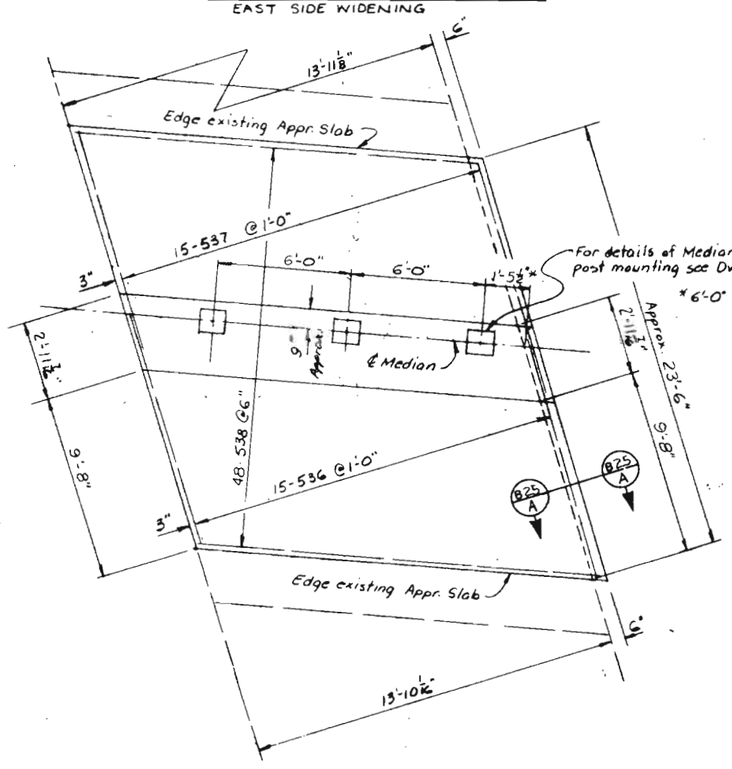

PLAN – APPROACH SLAB – ABUT 1
MEDIAN

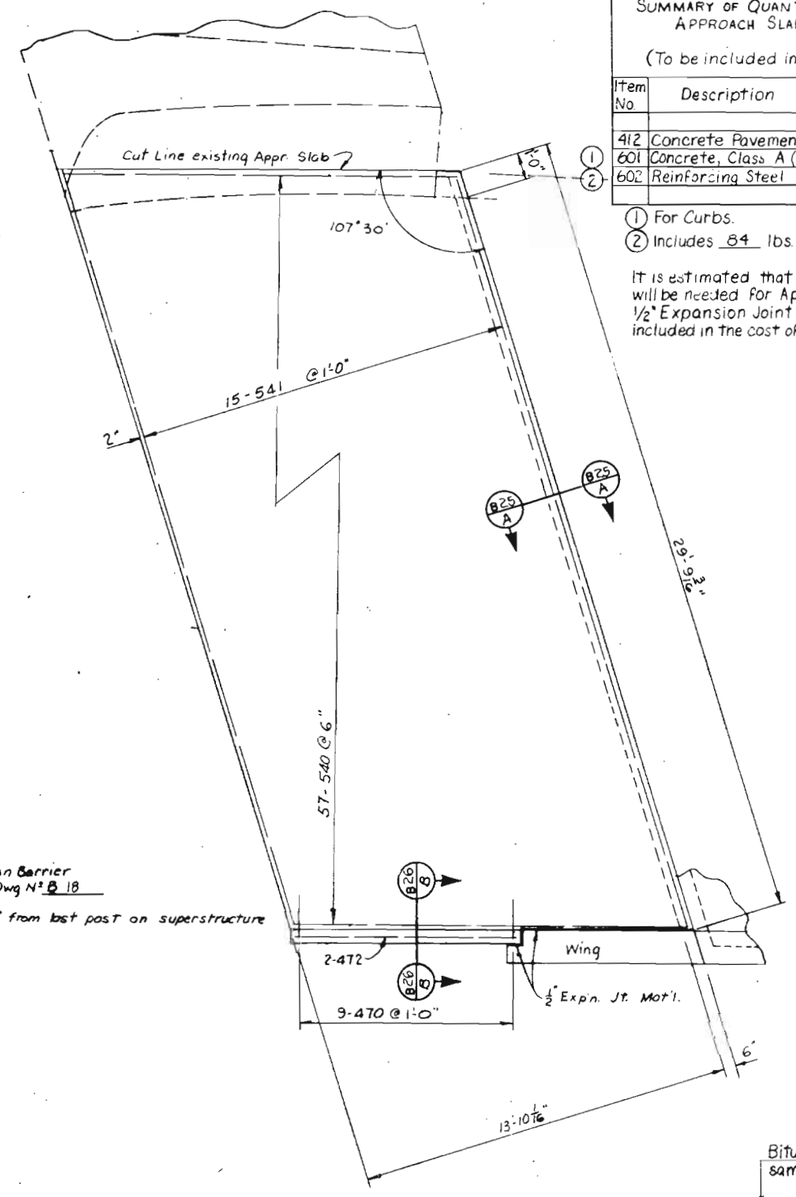

PLAN – APPROACH SLAB – ABUT 1
WEST SIDE WIDENING

SUMMARY OF QUANTITIES ~
APPROACH SLABS ABUTMENTS 1 AND 4

(To be included in Roadway Quantities)

Item No.	Description	Unit	Sub-Totals Abut. 1	Sub-Totals Abut. 4	Total
412	Concrete Pavement (10 inch)	Sq. Yd.	101	91	~~192~~ 195
601	Concrete, Class A (Misc.)	Cu. Yd.	0.5	0.9	1.4
602	Reinforcing Steel	Lbs.	3028	2628	5656

(1) For Curbs.
(2) Includes 84 lbs. of reinforcing steel for curbs.

It is estimated that 54 cu. yd. of concrete will be needed for Approach Slabs.
1/2" Expansion Joint Material to be included in the cost of Approach Slabs.

BAR LIST ~ APPROACH SLABS ABUTMENTS 1 AND 4

Mark	No. Req'd. Abut. 1	No. Req'd. Abut. 4	Length	Type	Dimensions h	Dimensions v	Dimensions d
470	17	13	2-4	VII	1-2	1-2	
471	2		7-6	str.			
472	2		8-2	str.			
473		2	6-3	str.			
474		2	5-6	str.			
536	15		11-4	XI	9-4	2-0	0-9
537	15		12-6	XI	10-6	2-0	0-9
538	70		15-0	str.			
539	15		11-6	str.			
540	57		14-8	str.			
541	15		29-5	str.			
542		15	11-0	str.			
543		109	14-10	str.			
544		15	12-8	XI	10-8	2-0	1-0
545		15	11-2	XI	9-2	2-0	1-0
546		15	22-10	str.			

BENDING DIAGRAMS (Dimensions are out to out)

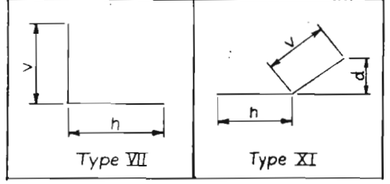

GENERAL NOTES
Concrete for Approach Slabs and Curbs may be Class A, D or P.

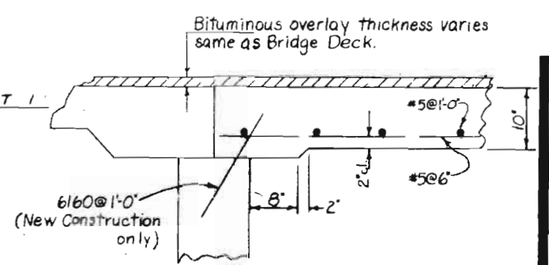

SECTION B25 A

DESIGNED BY		INITIAL	DATE	CHECKED BY	
CHECKED BY		J.L.B.	9-71	QUANTITIES BY	E.H.H. 2-72
DETAILED BY		R.R.A.	12-3-71	CHECKED BY	M.L.R. 2-72

DIVISION OF HIGHWAYS

APPROACH SLABS
ABUTMENT 1

Approved:
Bridge Engineer
Date:

Designer: J.L. Barber
Detailer: R. Akin
Structure Numbers F-16-EG F-16-EH
DWG. No. B 25 OF 26

FEDERAL ROAD REGION NO.	DISTRICT	PROJ. NO.	SHEET NO.	TOTAL SHEETS
VIII	COLORADO	I 25-2(91)209	95	

REVISIONS		

AS CONSTRUCTED
NO REVISIONS
6-28-74

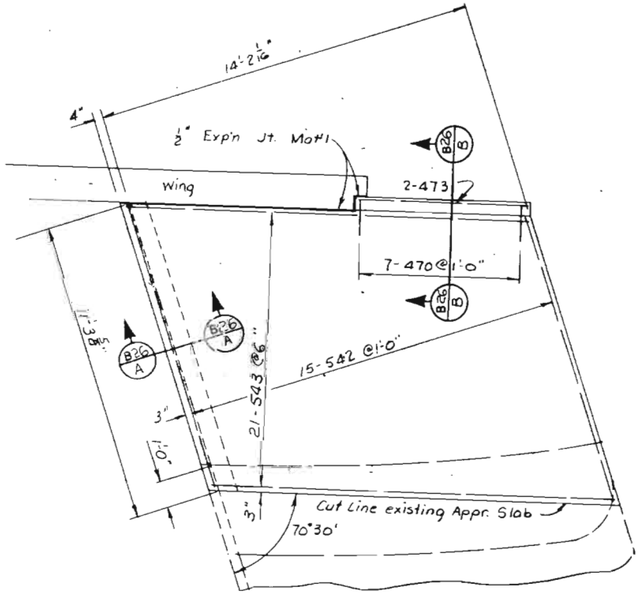

PLAN - APPROACH SLAB - ABUT 4
EAST SIDE WIDENING

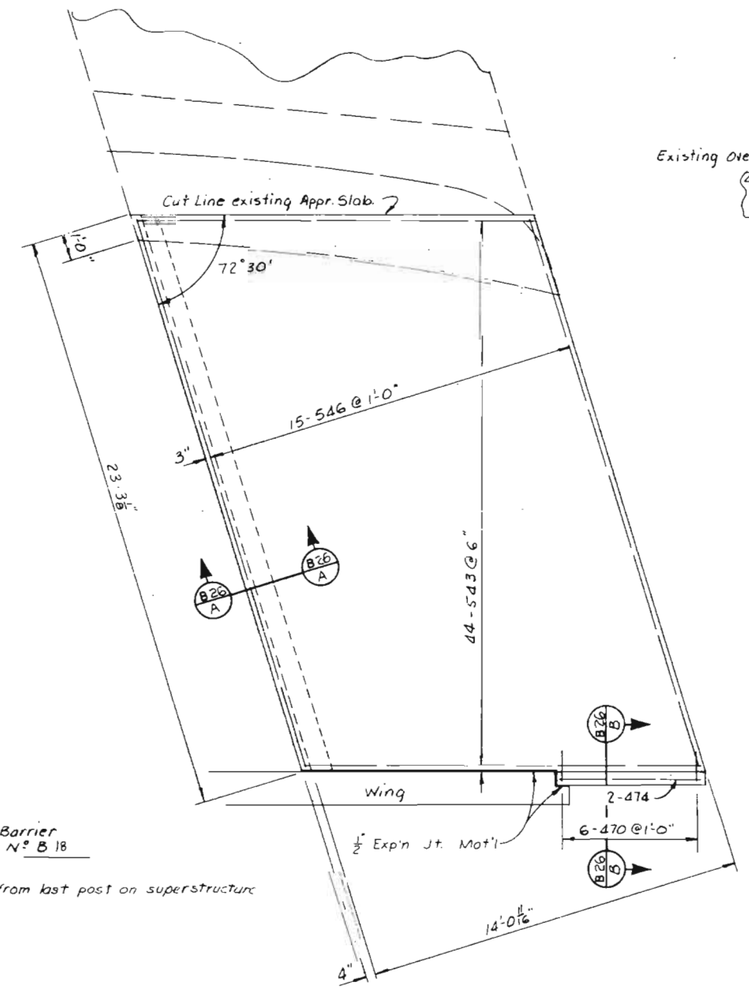

PLAN - APPROACH SLAB - ABUT 4
WEST SIDE WIDENING

Save protruding steel to be used as dowels into new slab.
Coat cut surfaces with epoxy bonding material.
Equipment used in removal of portions of structure shall be as approved by the engineer.

SLAB CUTTING DETAIL

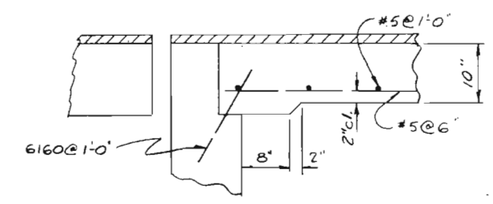

SECTION B26 A

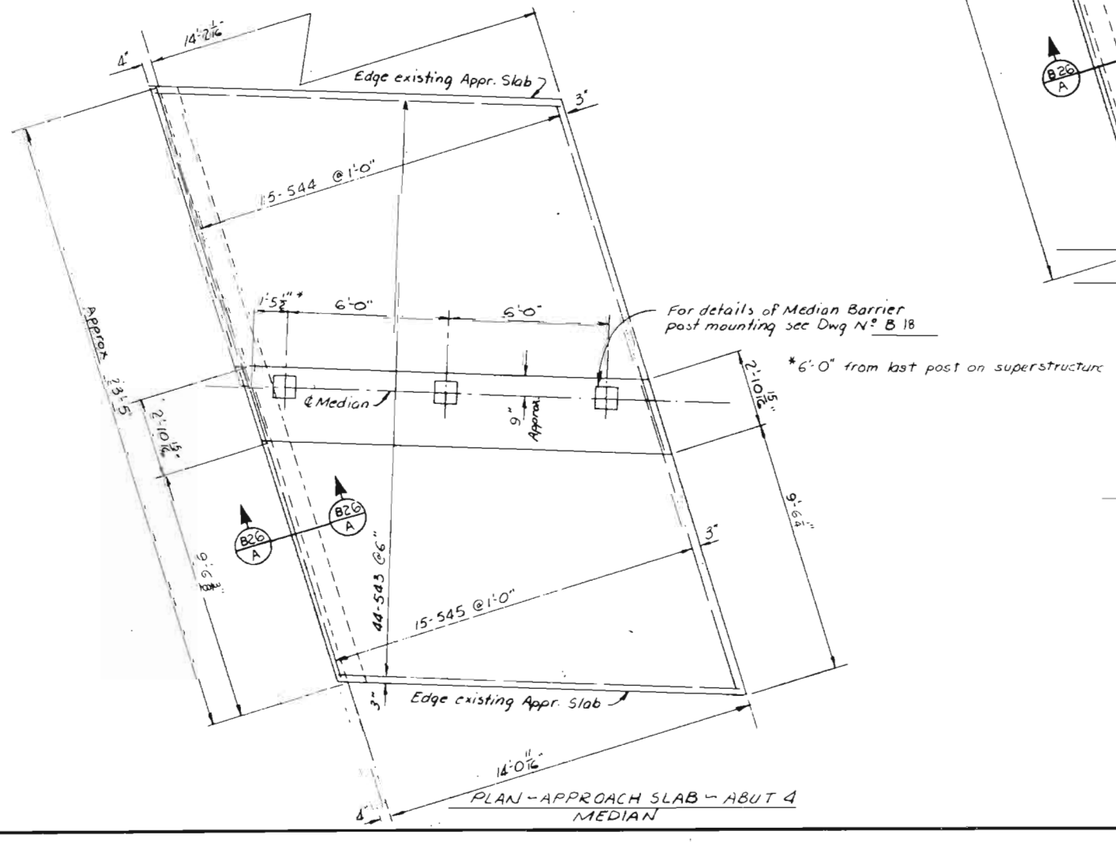

PLAN - APPROACH SLAB - ABUT 4
MEDIAN

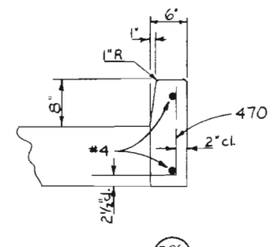

SECTION B26 B

DESIGNED BY	INITIAL	DATE	CHECKED BY	DATE
J.L.B.		9-71	EHH	2-72
CHECKED BY	R.A.	12-2-71	MLR	2-72
DETAILED BY			EHH	2-72
			MLR	2-72

DIVISION OF HIGHWAYS

APPROACH SLABS
ABUTMENT 4

Approved:	Designer: J.L. Barber	Detailer: R. Akin
Bridge Engineer	Structure Numbers	F-16-EG
Date:		F-16-EH
	DWG. No. B26	OF 26