AS CONSTRUCTED			
NO REVISIONS		REVISED 9/30/87	VOID

FEDERAL ROAD REGION NO.	DIVISION	PROJ. NO.	SHEET NO.	TOTAL SHEETS
VIII	COLORADO	IR25-2(187)	142	~~170~~/177

REVISIONS			
R-1	6-5-86	Revised Note & Quantities	J.K.K.

BRIDGE STANDARD O

GENERAL NOTES

All work shall be done according to the Standard Specifications of the Division of Highways, State of Colorado, applicable to the project.

Structure excavation and backfill shall be in accordance with standard M-206-2. Adequate shoring protection for track and embankment adjacent to pier construction shall be provided during all phases of construction. The method of shoring shall be approved by B.N.R.R. Payment for shoring to be included in item 206, Structure Excavation

Expansion joint material shall meet A.A.S.H.T.O. Specification M-213.

All structural steel shall be AASHTO M-183 (ASTM A-36)

All AASHTO M183 (ASTM A-36) steel not otherwise noted shall be painted in accordance with section 509 of the Standard Specifications. The color shall match the ~~light tone~~ concrete coating on Superstructure and Bridge Rail.

All bolts shall be 7/8" diameter, high strength, ASTM A-325, unless otherwise noted.

No welding of any kind shall be permitted on the flanges of steel girders unless specifically called for on the plans.

R-1 Grade 60 reinforcing steel is required for #4 bars and larger. All reinforcing steel shown and detailed within this set of drawings, whether noted with the symbol (E.C.) or not, shall be epoxy coated.
The following table gives the minimum lap splice length for reinforcing bars:

Bar Size	#4	#5	#6	#7	#8	#9	#10	#11
Splice length for Class A Concrete	1'-0"	1'-3"	1'-8"	2'-3"	3'-0"	3'-10"	4'-10"	5'-11"
Splice length for Class D Concrete	1'-0"	1'-3"	1'-6"	2'-0"	2'-7"	3'-4"	4'-2"	5'-1"

All concrete chamfers shall be 3/4 inch unless otherwise noted.

Applied wind loads and earthquake loads were not considered in analyzing the structure for stability during the construction stages.

For structure number installation, see Standard S-614-12.

Steel deck forms will be required over B.N. Railroad. Steel deck forms may be used in other areas at the contractor's option, at no additional cost to the State of Colorado. No steel deck forms will be allowed on the cantilever portion of the deck

Stations, elevations, and dimensions contained in these plans are calculated from the "as constructed plans" and recent field survey. These stations, elevations and dimensions may be adjusted to meet the exist. structure. The Contractor shall verify all dependent dimensions in the field before ordering or fabricating any material.

Abbreviations: E.F. = Each Face F.F. = Far Face E.C. = Epoxy Coated
N.F. = Near Face B.F. = Back Face

Class I finish, followed by application of a colored acrylic coating will be required on all exposed concrete and down to 1'-0" below ground line. Requirements for coating are given in revision of section 601, Structural Concrete Coating.

DESIGN DATA:

Current AASHTO Specifications:

Live Load: AASHTO HS-20-44 and Interstate Alternate.
Dead Load: Assumes 48 lbs per sq. ft. for bituminous pavement
Design Method: Service load design.

Reinforced Concrete:
Class A Concrete: f_c = 1,200 psi n = 9
Class D Concrete: f_c = 1,800 psi n = 8

Reinforcing Steel: #4 bars and larger: f_s = 24,000 psi

Structural Steel: AASHTO M-183 (ASTM A-36) f_s = 20,000 psi.

CROSS REFERENCE DRAWING NUMBER
B
SECTION OR DETAIL IDENTIFICATION

SUMMARY OF QUANTITIES

	Item	Description	Unit	Structure No. F-16-EG Super-structure	Abut. 1	Pier 2	Pier 3	Abut. 4	As Constructed Total	
	202	Removal Portions of Present Structure	L.S.						1	
	206	Structure Excavation	Cu.Yd.			600	600		1200	
	206	Structure Backfill (Class 1)	Cu.Yd.		151	505	505	151	1312	
	403	Hot Bituminous Pavement (Grade EX)(Haul & Asphalt)	Ton	88					~~88~~	102.27
(3)	502	Steel Piling (HP 12×53)	L.F.		334			357	~~641~~	781
(2)	509	Structural Steel	Lb.	151,107					151,107	
	515	Waterproofing Membrane	Sq.Yd.	814					814	
	601	Concrete Class A (bridge)	Cu.Yd.		25	154	154	25	358	
	601	Concrete Class D (bridge)	Cu.Yd.	228					228	
R-1	602	Reinforcing Steel (Epoxy Coated)	Lb.	74,706	2165	25,000	25,000	2067	~~128,938~~	125,375
	606	Bridge Rail Type 4 (Special)	L.F.	143					143	
	606	Bridge Rail Type 4	L.F.	305					305	
	613	2"Ø Electrical Conduit	L.F.	166					~~166~~	160
(1)		1/2" Expansion Material	Sq.Ft.		6			6	12	
		1" Expansion Material	Sq.Ft.	213	23	7	7	23	273	
		2 1/2" Expansion Material	Sq.Ft.			7	7		14	

(1) Will not be paid for separately, but will be included in the work under pay item 601 Class A concrete.
(2) Includes: 2990 lbs. shear studs
1817 lbs. A 325 splice & diaphragm connection bolts and Anchor bolts.
6527 lbs. splice, diaphragm and bearing plates
(3) HPS 10×57 may be used in lieu of HP 12×53 at the original bid price.

INDEX OF DRAWINGS

DWG NO.	TITLE
B-1	General Information / Summary of Quantities
B-2	General Layout
B-3	Engineering Geology
B-4	Construction Layout
B-5	Footing and Pile Layout.
B-6	Abutment 1 Details
B-7	Abutment 4 Details
B-8	Wingwall Details
B-9	Pier Column and Crash Wall Details
B-10	Piers 2 & 3 Details
B-11	Girder Elevation
B-12	Diaphragm Layout
B-13	Superstructure Details
B-14	Bearing Details
B-15	Bridge Rail Type 4
B-16	Bridge Deck Elevations
B-17	Bridge Deck Elevations
B-18	Bridge Deck Elevations
B-19	Bridge Deck Elevations
B-20	Roadway Approaches

BRIDGE DESCRIPTION

Bridge at Ramp F and I-25
3 span (42'-11 3/8", 53'-8 1/2", 42'-11 5/8") multiple wide flange beam with 7 3/4" composite slab.

Over Burlington Northern Railroad
50'-0" (min), 51'-5 5/8" (max.) curb to curb
Skew - 16° 29' 19"

De Leuw, Cather & Company

J.F. SATO & ASSOCIATES

COLORADO REGISTERED PROFESSIONAL ENGINEER 20950 HWY. & SUBURBAN

1/16/86

Reviewed 2-24-86
BRIDGE ENGINEER DATE

DIVISION OF HIGHWAYS

GENERAL INFORMATION
SUMMARY OF QUANTITIES

Station 722+84.56
Station 724+28.23

Near Denver Sec 9 T 4 S R 68 W

Designer J. Cornejo Structure Numbers F-16-EG
Detailer J. McHenry
Drawing Number B-1 of 20 Drawings

Revision Dates (Preliminary Stage Only)

(11-1-70)

AS CONSTRUCTED		
NO REVISIONS	REVISED 9/30/87	VOID

FEDERAL ROAD REGION NO.	DIVISION	PROJ. NO.	SHEET NO.	TOTAL SHEETS
VIII	COLORADO	IR25-2(187)	143	~~170~~ 177

REVISIONS		

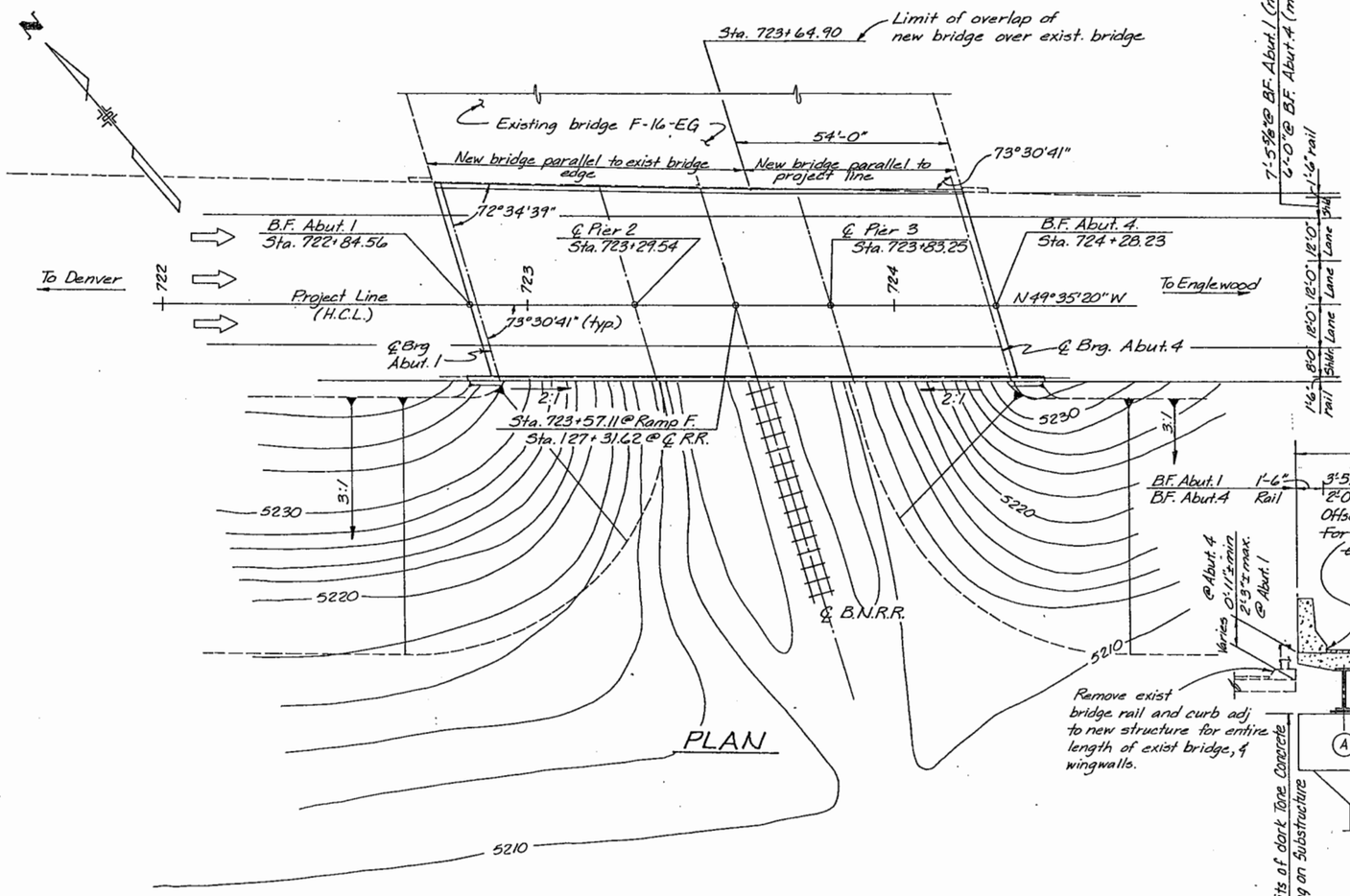

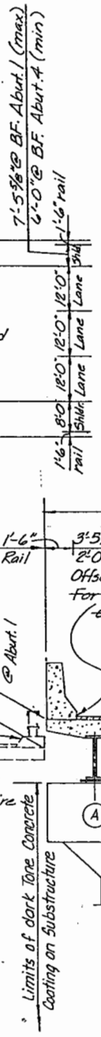

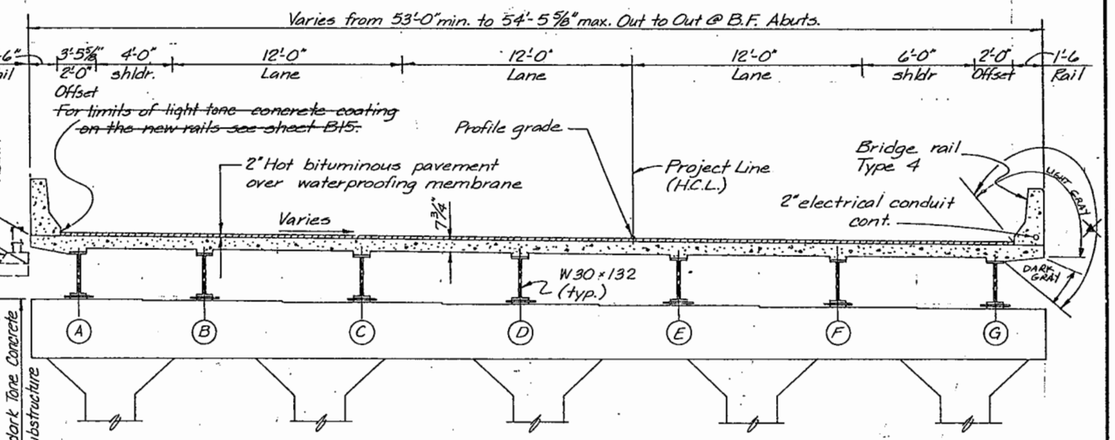

TYPICAL SECTION

NOTE:
GIRDERS ARE DARK GRAY (TYP.)

~~▲ Limits of light tone concrete coating on superstructure and bridge rail.~~

NOTE:
Limits of superelevation variation.
@ Sta. 721+75.42 se = 0.06'/'
@ Sta. 723+00.00 se = 0.02'/'

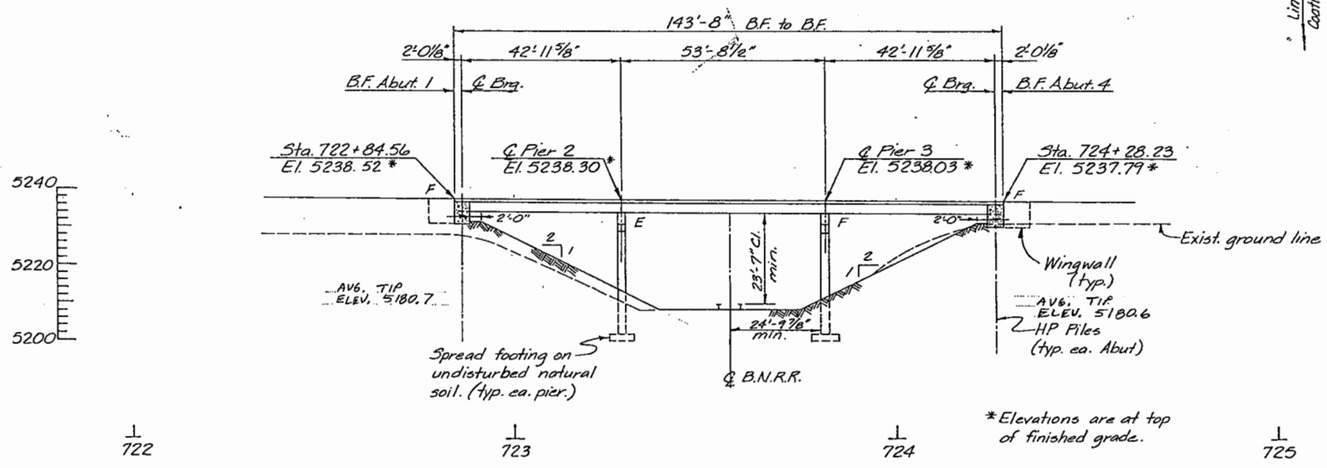

* Elevations are at top of finished grade.

SECTION
(All dimensions taken along Project Line)

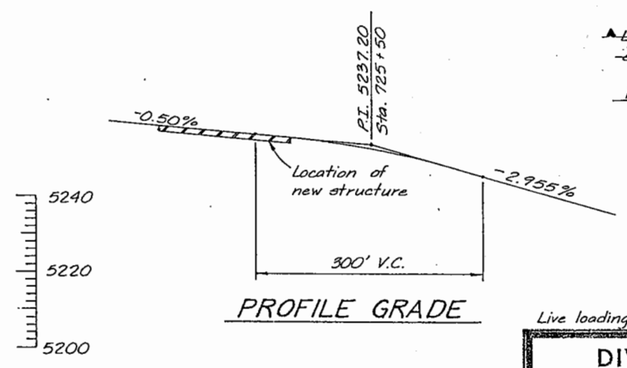

PROFILE GRADE

Live loading: HS-20-44 Interstate Alternate

DIVISION OF HIGHWAYS

I-25 & 6 AVE. INTERCHANGE - RAMP 'F' OVER B.N.R.R.

GENERAL LAYOUT

Designer	J. Cornejo	Structure Numbers	F-16-EG
Detailer	J. McHenry		
Drawing Number B - 2		of 20	Drawings

Revision Dates (Preliminary Stage Only)

AS CONSTRUCTED		
NO REVISIONS	REVISED 9/30/87	VOID

FED ROAD REG. NO	DIVISION	PROJECT NO.	SHEET NO.	TOTAL SHEETS
VIII	COLORADO	IR 25-2(187)	144	~~170~~/77

REVISIONS

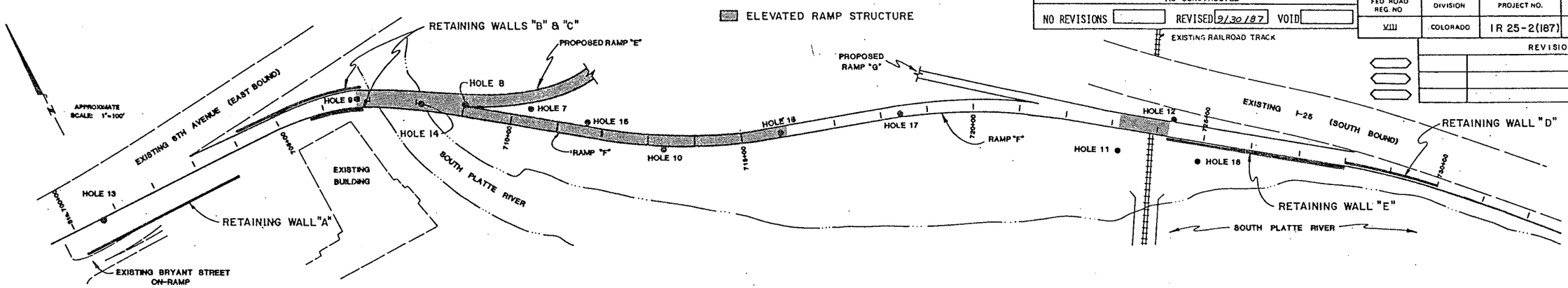

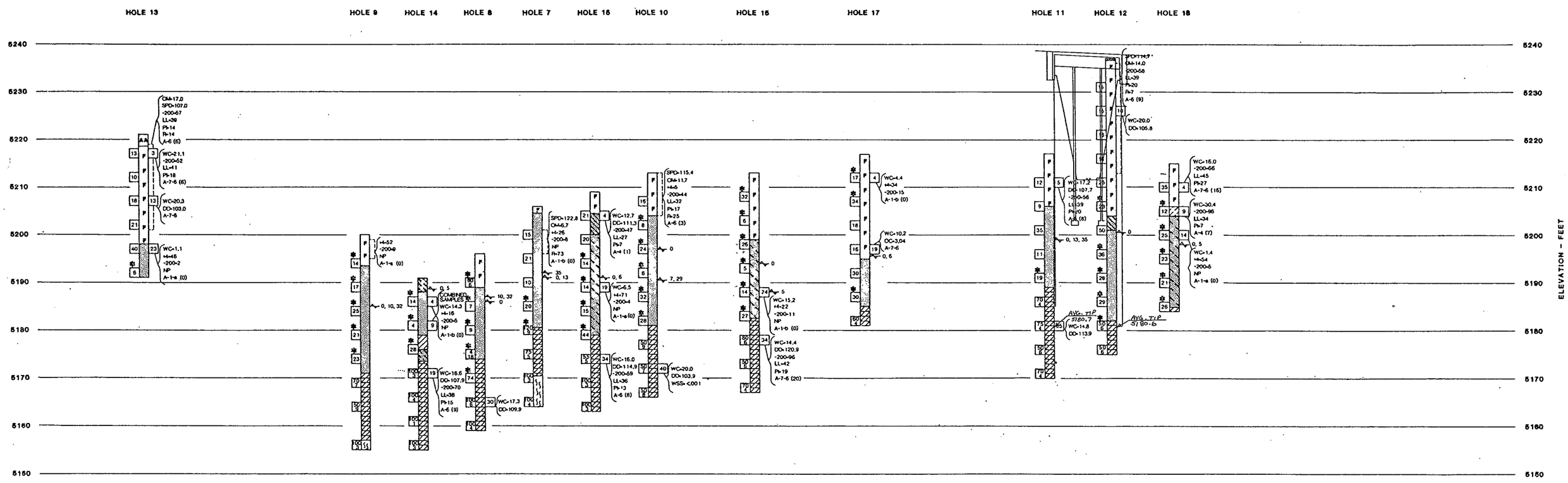

LEGEND:

- CONCRETE
- A.C. ASPHALT AND BASE COURSE
- F FILL, SANDY CLAY TO CLAYEY SAND AND SILTY SAND, SCATTERED GRAVEL, UP TO 80% TRASH BY VOLUME IN HOLES 16 AND 17 CONSISTING OF CINDERS, BRICK, CONCRETE, WOOD, PAPER AND RAGS, SLIGHTLY MOIST TO MOIST, BROWN TO BLACK.
- CLAY (CL), SANDY, VERY STIFF, VERY MOIST TO WET, GRAY TO BROWN.
- SILT (ML), SLIGHTLY SANDY TO SANDY, STIFF, MOIST TO VERY MOIST, BROWN.
- SAND (SC), FINE TO COARSE GRAINED, CLAYEY TO VERY CLAYEY, DENSE, SLIGHTLY MOIST TO MOIST, BROWN.
- SAND (SM), FINE TO COARSE GRAINED, SILTY, SCATTERED GRAVEL, MEDIUM DENSE, WET, BROWN.
- SAND (SP-SM), FINE TO COARSE GRAINED, GRAVELLY, LOOSE TO DENSE, MOIST TO WET, BROWN.
- SAND (SP), FINE TO COARSE GRAINED, GRAVELLY, CLEAN TO SLIGHTLY SILTY, LOOSE TO DENSE, MOIST TO WET, BROWN.
- CLAYSTONE BEDROCK, SANDY TO VERY SANDY, MEDIUM HARD TO VERY HARD, SLIGHTLY MOIST TO VERY MOIST, BROWN TO GRAY-BLUE, BLOCKY, OCCASIONAL SANDSTONE LENSES.
- SS SANDSTONE BEDROCK, FINE TO MEDIUM GRAINED, VERY HARD, SLIGHTLY MOIST, BLUE, MODERATELY CEMENTED.

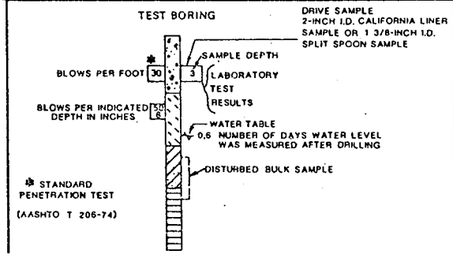

LABORATORY TEST RESULTS:

WC=WATER CONTENT (%)
DD=DRY DENSITY (pcf)
+4=PERCENTAGE RETAINED ON #4 SIEVE
-200=PERCENTAGE PASSING NO. 200 SIEVE
LL=LIQUID LIMIT (%)
PI=PLASTICITY INDEX (%)
NP=NON-PLASTIC
OC=ORGANIC CONTENT (%)
SPD=MAXIMUM STANDARD PROCTOR DENSITY (pcf)
OM=OPTIMUM MOISTURE CONTENT (%)
R=HVEEM STABILOMETER RESISTANCE VALUE
A-1-b (0)= AASHTO CLASSIFICATION AND GROUP INDEX.

⊗ LOCATION OF EXPLORATORY BORING

EXPLORATORY HOLE	DATE OF DRILLING
7	3-8-85
8	3-11-85
9	3-11-85
10	3-14-85
11	3-8-85
12	3-14-85
13	7-18-85
14	7-19-85
15	7-18-85
16	7-19-85
17	7-18-85
18	7-19-85

STRUCTURE NO. F-16-EG
DWG. NO. B-3 OF 20

DIVISION OF HIGHWAYS

ENGINEERING GEOLOGY

CHEN & ASSOCIATES, INC.

PROJECT NO. 1 501 84

Geologist	PLATE I
Drawn by A.S.	
Checked by G.T.J.	Date AUG. 1985

AS CONSTRUCTED		
NO REVISIONS 9/30/87	REVISED	VOID

FEDERAL ROAD REGION NO.	DIVISION	PROJ. NO.	SHEET NO.	TOTAL SHEETS
VIII	COLORADO	IR25-2(187)	145	179

REVISIONS		

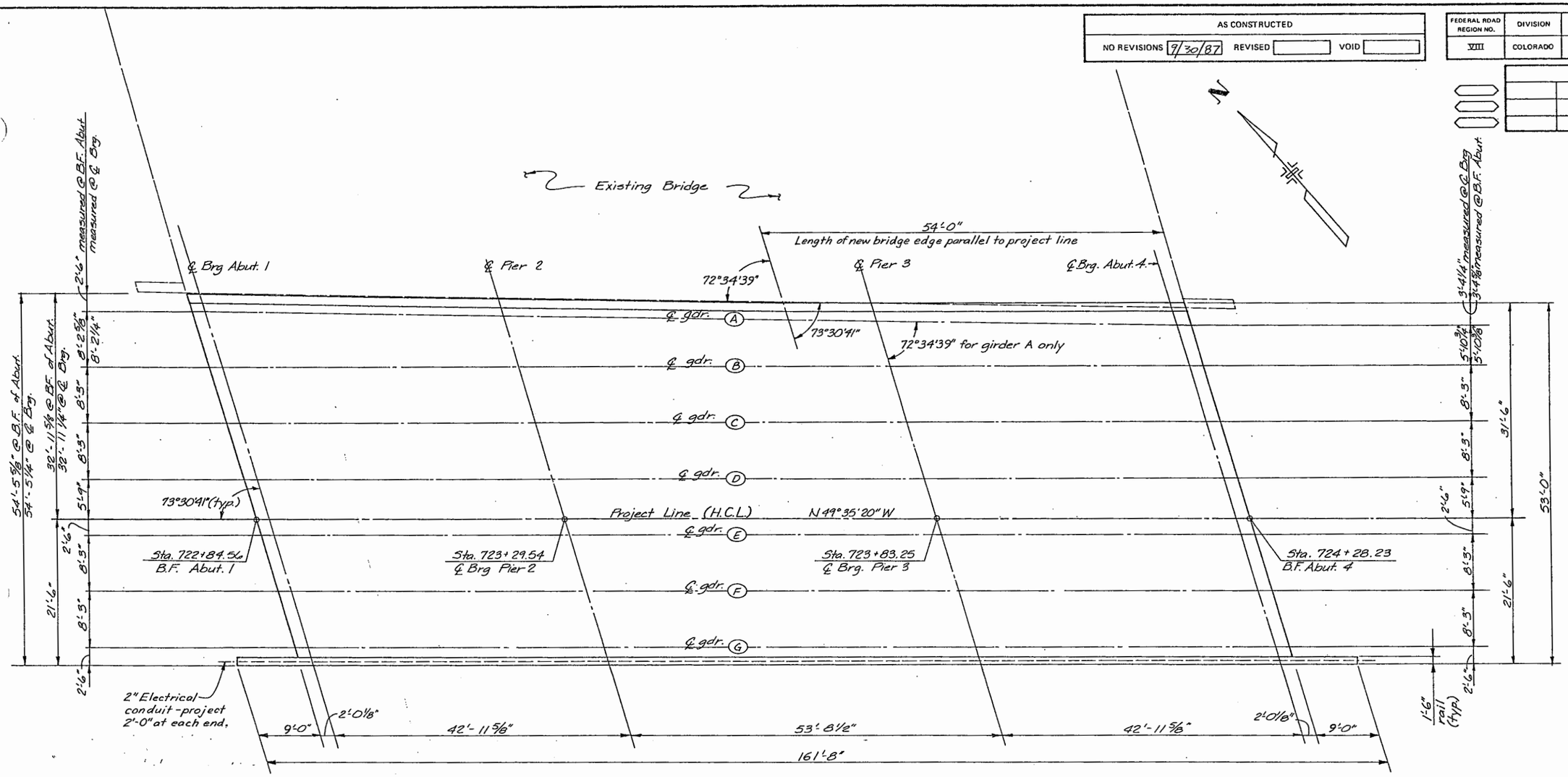

CONSTRUCTION LAYOUT

Notes:
1. Girders B to G are parallel to project line, except girder A as noted.
2. Longitudinal dimensions are measured along project line. Transverse dimensions are measured 90° to project line.

DIVISION OF HIGHWAYS

I-25 & 6 AVE. INTERCHANGE - RAMP 'F' OVER BNRR

CONSTRUCTION LAYOUT

Designer J. Cornejo		Structure Numbers	F-16-EG
Detailer J. McHenry			
Drawing Number B-4	of 20	Drawings	

Revision Dates (Preliminary Stage Only)

AS CONSTRUCTED		
NO REVISIONS 9/30/87	REVISED	VOID

FEDERAL ROAD REGION NO.	DIVISION	PROJ. NO.	SHEET NO.	TOTAL SHEETS
VIII	COLORADO	IR25-2(187)	146	170

REVISIONS		

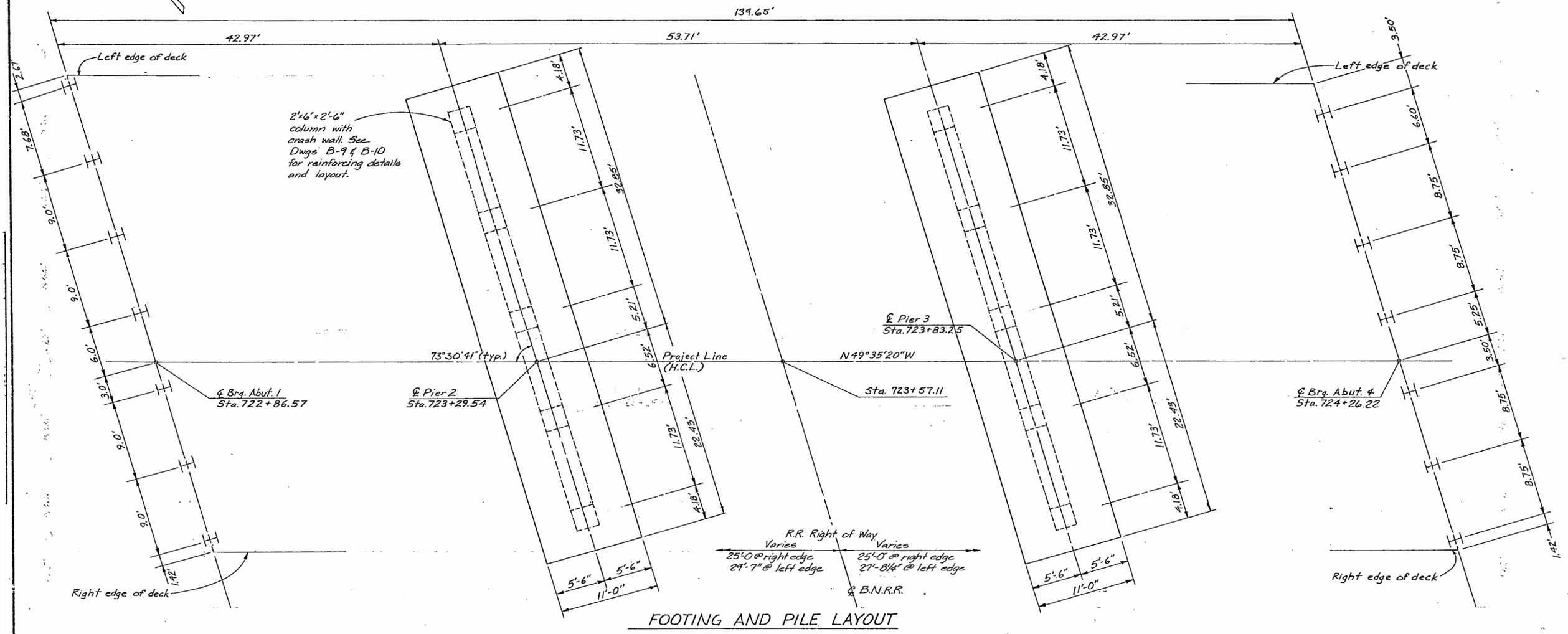

FOOTING AND PILE LAYOUT

Location	Foundation Type	Est. Elevation	Max. Pile Load (T)
	Pile / Ftg.	Tip Elev./Bott. Ftg.	Max. Brg. Press. (KSF)
Abut. 1	HP12×53 Pile	5185.0	45.0
Abut. 4	HP12×53 Pile	5181.0	45.0
Pier 2	Spread Ftg.	5202.0	2.7
Pier 3	Spread Ftg.	5202.0	2.7

NOTES:

1. All piles shall be HP 12×53 end bearing with maximum loads shown on the table.
2. All dimensions shown are at the bottom of concrete.
3. Piles shall penetrate at least 4 ft. into bedrock. See dwg B-3 for approx. location of bedrock.
4. HPS 10×57 may be used in lieu of HP 12×53 at the original bid price.

DIVISION OF HIGHWAYS

I-25 & 6 AVE. INTERCHANGE - RAMP 'F' OVER BNRR

FOOTING AND PILE LAYOUT

Designer	J. Cornejo	Structure Numbers	F-16-EG
Detailer	J. McHenry		
Drawing Number B-5		of 20	Drawings

Revision Dates (Preliminary Stage Only)

AS CONSTRUCTED			
NO REVISIONS 9/30/87	REVISED		VOID

FEDERAL ROAD REGION NO.	DIVISION	PROJ. NO.	SHEET NO.	TOTAL SHEETS
VIII	COLORADO	IR25-2(187)	147	~~770~~ 777

REVISIONS		

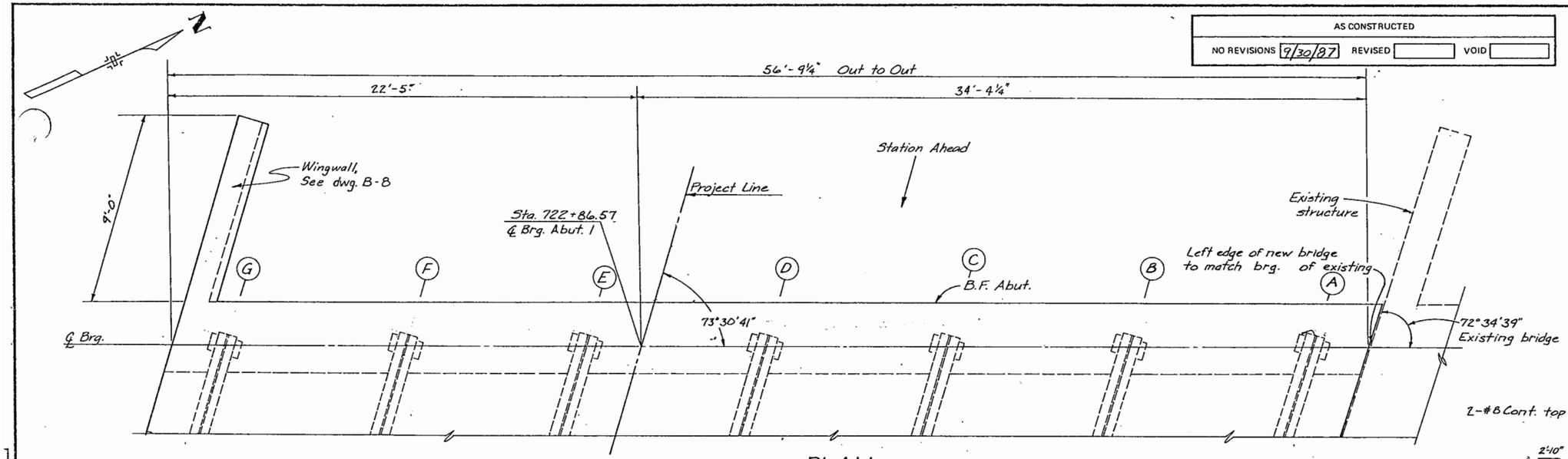

PLAN

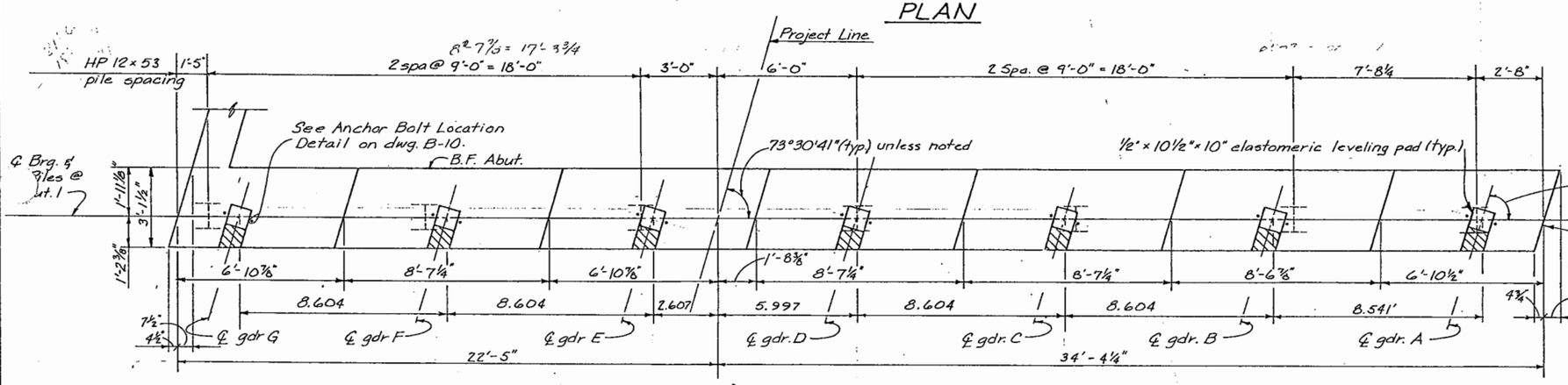

PLAN - ABUTMENT CAP

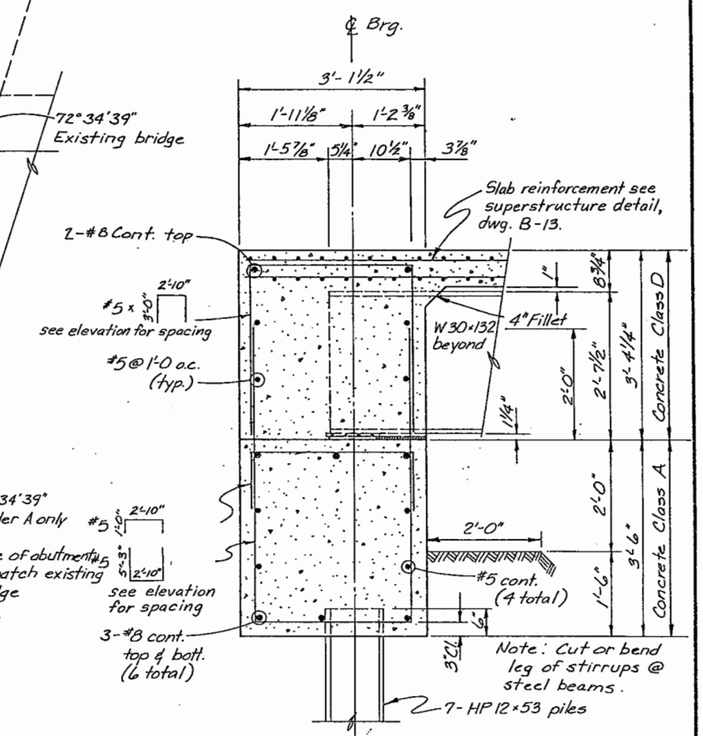

TYPICAL SECTION BETWEEN GIRDERS

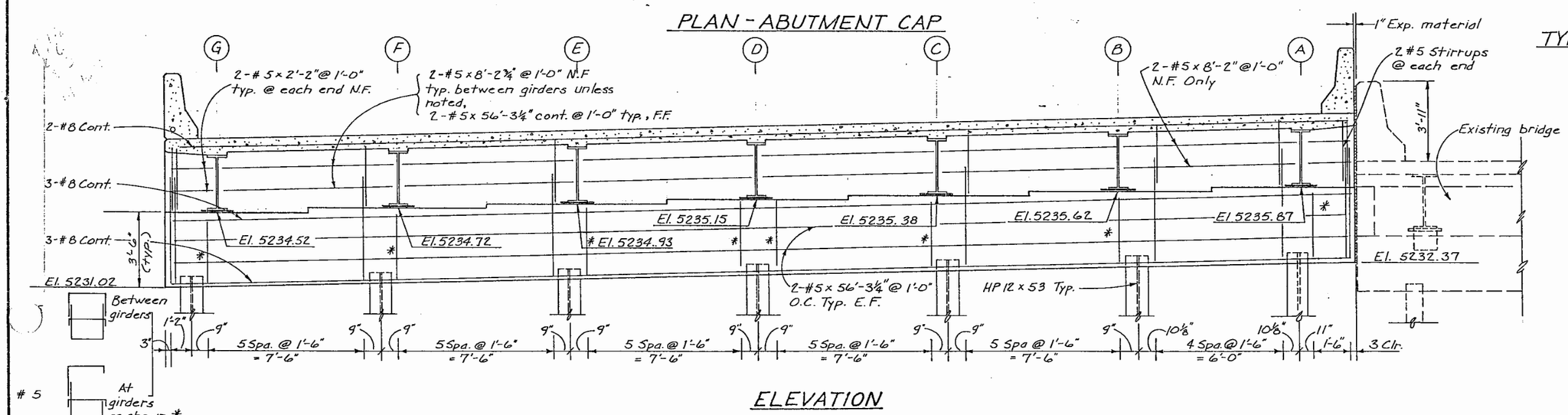

ELEVATION

NOTE:
1. Abutment diaphragms concrete shall be poured monolithically with slab concrete.

DIVISION OF HIGHWAYS

I-25 & 6 AVE. INTERCHANGE-RAMP F OVER BNRR

ABUTMENT 1 DETAILS

Designer	J. Cornejo	Structure Numbers	F-16-EG
Detailer	J. McHenry		
Drawing Number B-6	of 20	Drawings	

Revision Dates (Preliminary Stage Only)

AS CONSTRUCTED		
NO REVISIONS 9/30/87	REVISED	VOID

FEDERAL ROAD REGION NO.	DIVISION	PROJ. NO.	SHEET NO.	TOTAL SHEETS
VIII	COLORADO	IR25-2(187)	148	~~170~~ 177

REVISIONS		

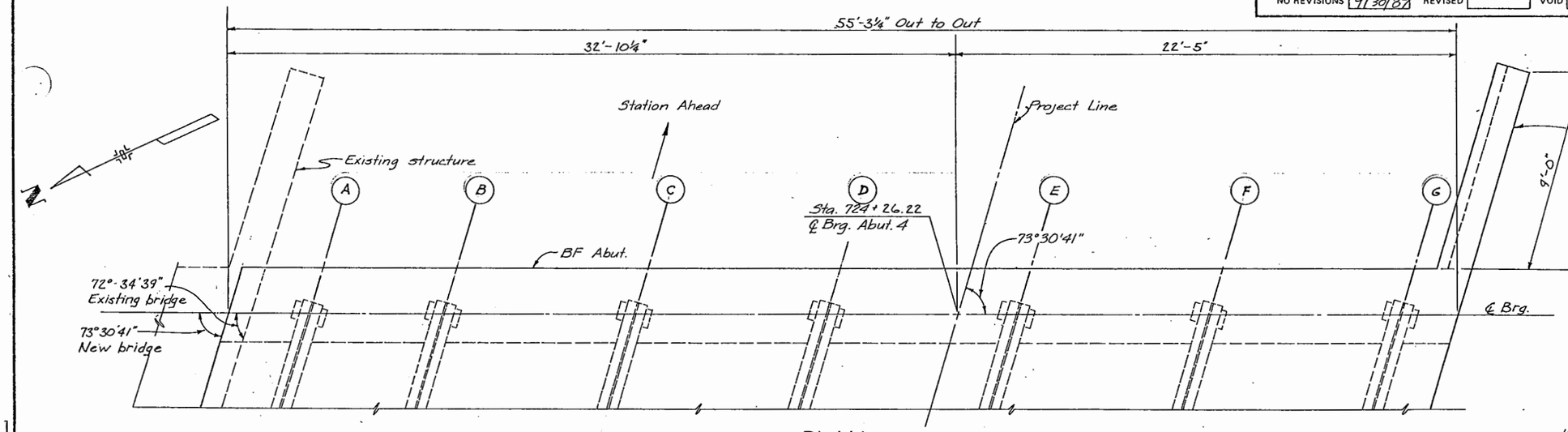

PLAN

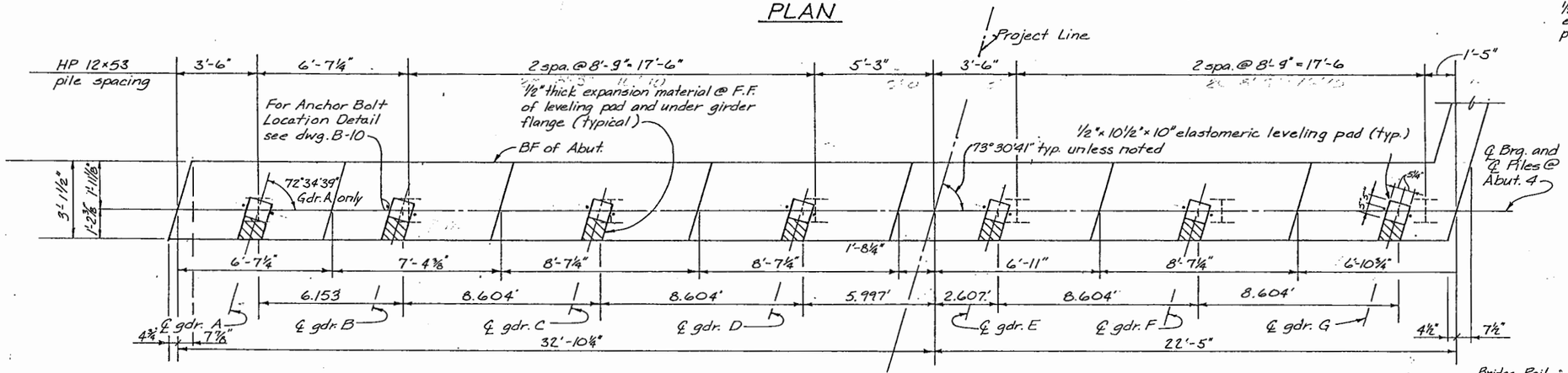

PLAN- ABUTMENT CAP

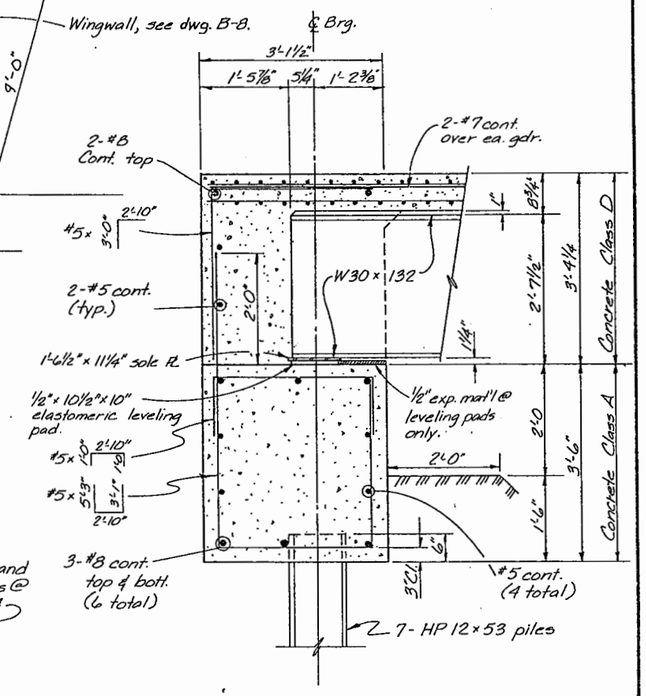

TYPICAL SECTION AT GIRDER

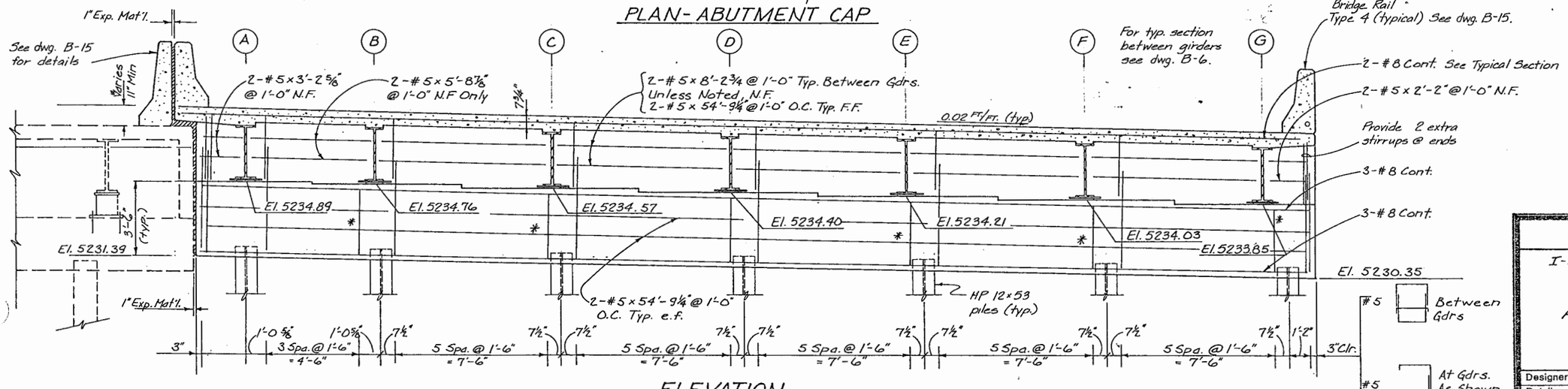

ELEVATION

DIVISION OF HIGHWAYS

I-25 & 6 AVE INTERCHANGE - RAMP F OVER BNRR

ABUTMENT 4 DETAILS

Designer	J. Cornejo	Structure Numbers	F-16-EG
Detailer	J. McHenry		
Drawing Number B - 7		of 20	Drawings

Revision Dates (Preliminary Stage Only)

AS CONSTRUCTED			
NO REVISIONS		REVISED 9/30/87	VOID

FEDERAL ROAD REGION NO.	DIVISION	PROJ. NO.	SHEET NO.	TOTAL SHEETS
VIII	COLORADO	IR25-2(187)	149	~~170~~ 177

REVISIONS		

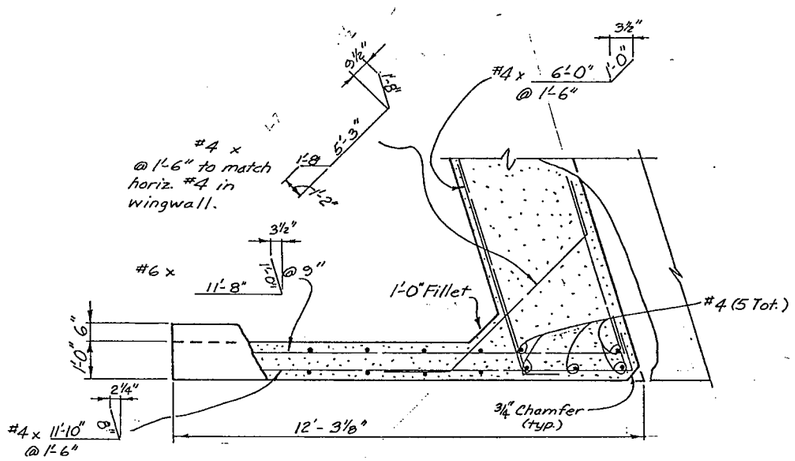

PLAN- ABUT. 1
(Right Wingwall)

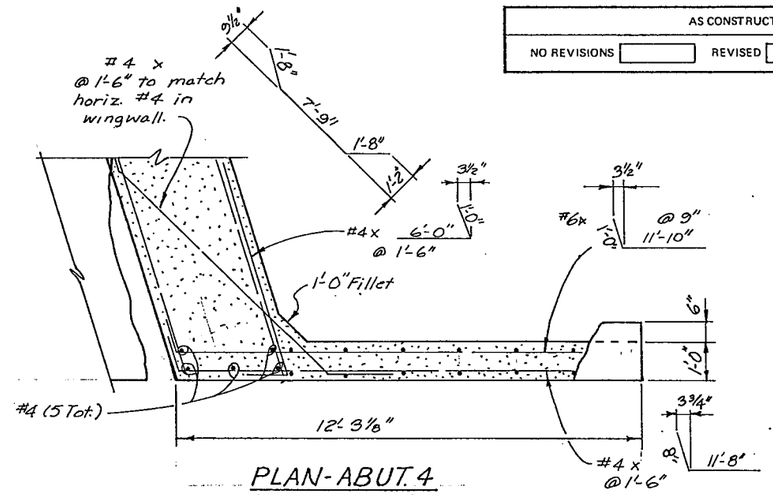

PLAN- ABUT. 4
(Right Wingwall)

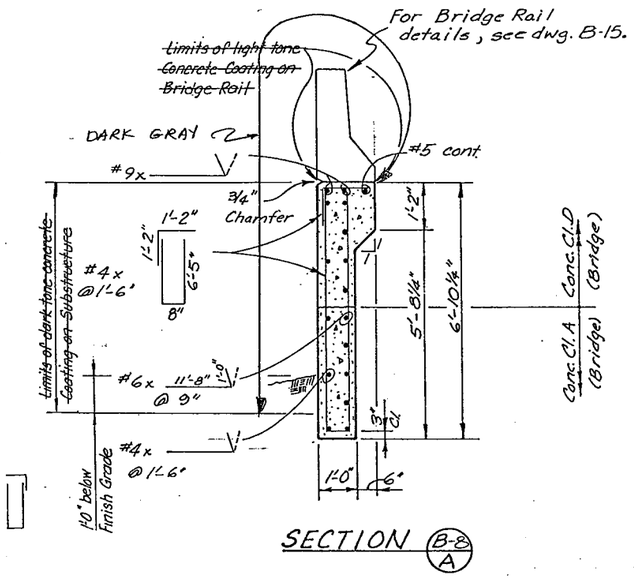

SECTION (B-8 / A)

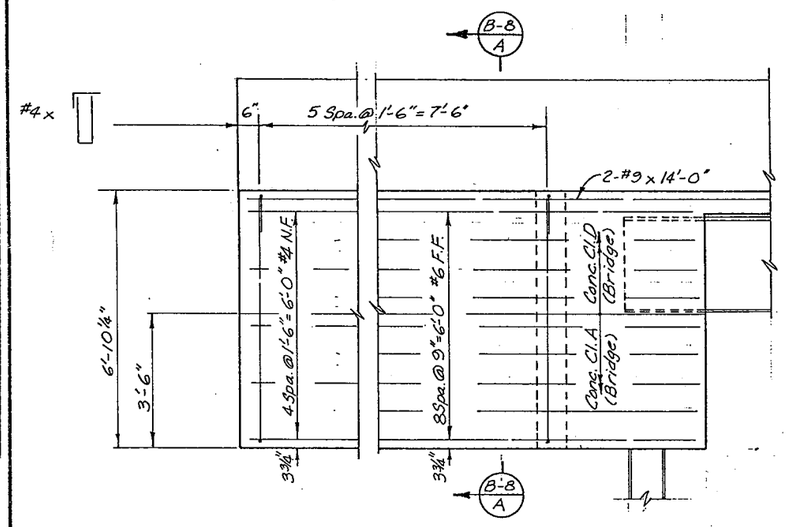

ELEVATION- ABUT. 1
(Right Wingwall)

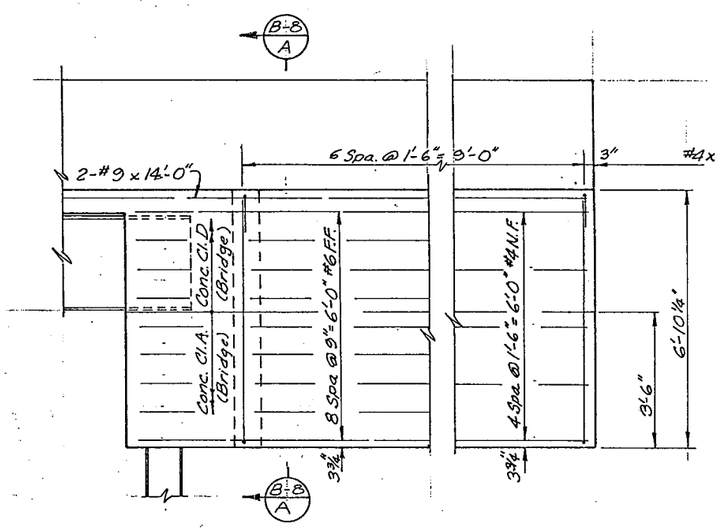

ELEVATION- ABUT. 4
(Right. Wingwall)

DIVISION OF HIGHWAYS

I-25 & 6 AVE. INTERCHANGE - RAMP 'F' OVER B.N.R.R.

WINGWALL DETAILS

Designer	J. Cornejo	Structure Numbers	F-16-EG
Detailer	S. Kobayashi		
Drawing Number B – 8		of 20	Drawings

Revision Dates (Preliminary Stage Only)

AS CONSTRUCTED			
NO REVISIONS 9/30/87	REVISED		VOID

FEDERAL ROAD REGION NO.	DIVISION	PROJ. NO.	SHEET NO.	TOTAL SHEETS
VIII	COLORADO	IR25-2(187)	150	~~170~~ 177

REVISIONS		

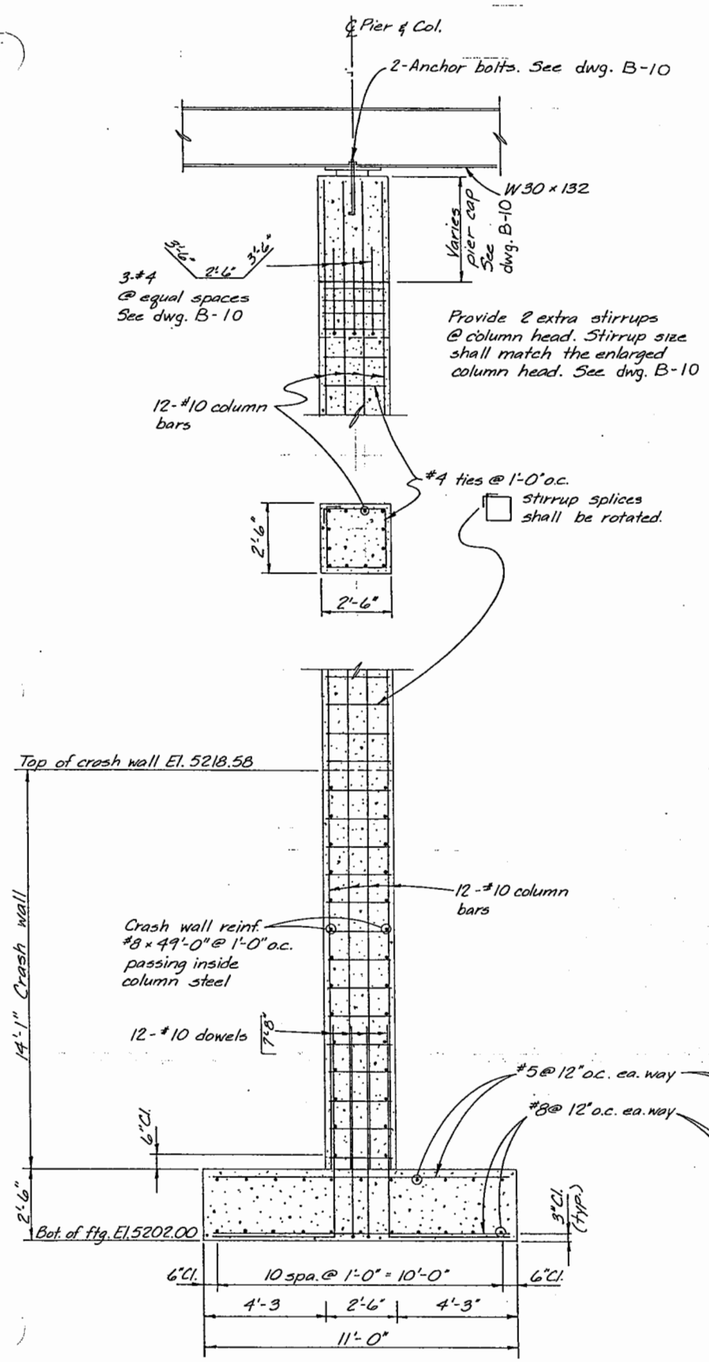

COLUMN SECTION (B-10 A)

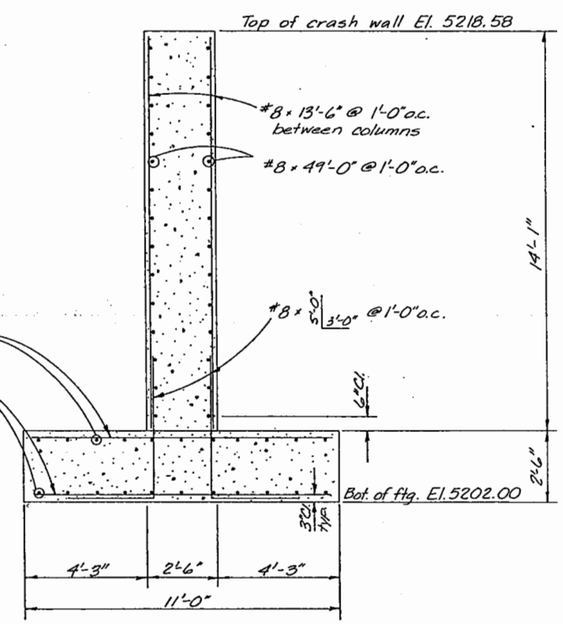

CRASH WALL SECTION (B-10 B)

DIVISION OF HIGHWAYS

I-25 & 6 AVE. INTERCHANGE - RAMP 'F' OVER B.N.R.R.

PIER COLUMN AND CRASH WALL DETAILS

Designer	J. Cornejo	Structure Numbers	F-16-EG
Detailer	J. McHenry		
Drawing Number B-9		of 20	Drawings

Revision Dates (Preliminary Stage Only)

AS CONSTRUCTED		
NO REVISIONS 9/30/87	REVISED	VOID

FEDERAL ROAD REGION NO.	DIVISION	PROJ. NO.	SHEET NO.	TOTAL SHEETS
VIII	COLORADO	IR25-2(187)	151	~~170~~ 177

REVISIONS		

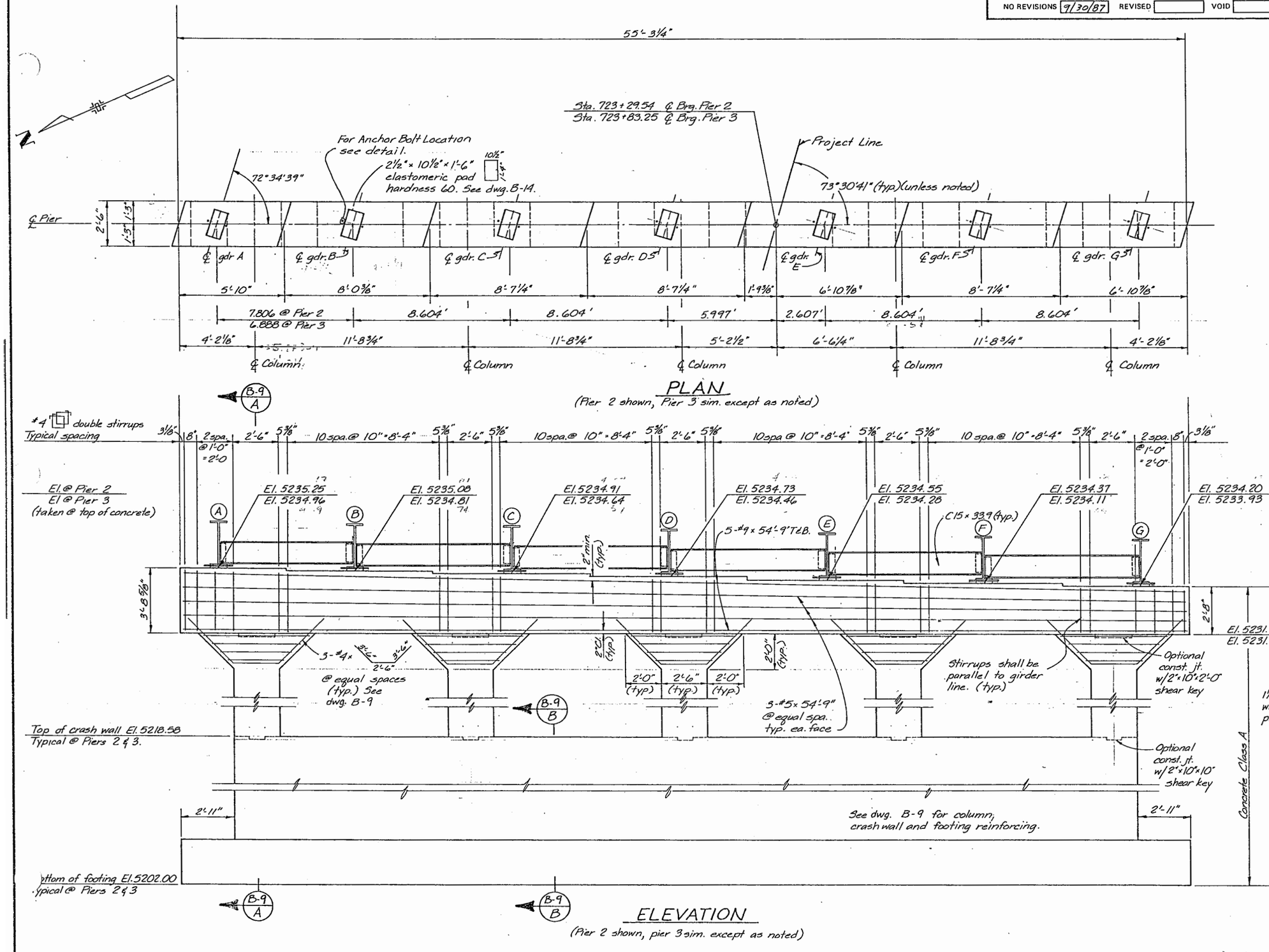

PLAN

(Pier 2 shown, Pier 3 sim. except as noted)

ELEVATION

(Pier 2 shown, pier 3 sim. except as noted)

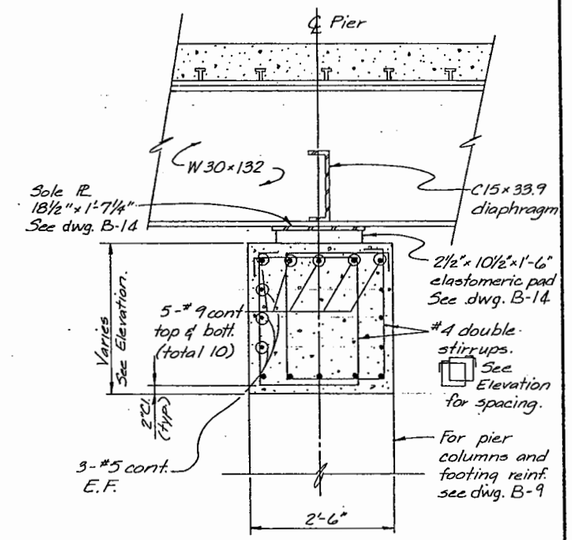

TYPICAL SECTION

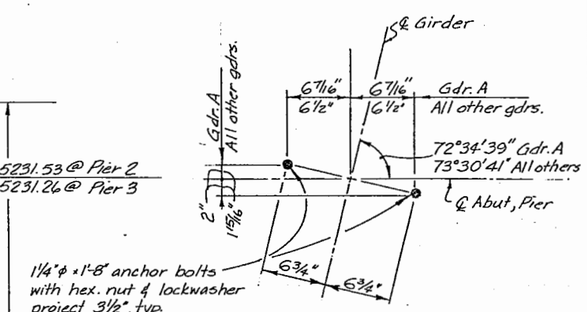

ANCHOR BOLT LOCATION DETAIL

DIVISION OF HIGHWAYS

I-25 & 6 AVE. INTERCHANGE - RAMP 'F' OVER BNRR.

PIERS 2 & 3 DETAILS

Designer J. Cornejo		Structure Numbers	F-16-EG
Detailer J. McHenry			
Drawing Number B-10	of	20	Drawings

Revision Dates (Preliminary Stage Only)

AS CONSTRUCTED			
NO REVISIONS 7/30/87	REVISED	VOID	

FEDERAL ROAD REGION NO.	DIVISION	PROJ. NO.	SHEET NO.	TOTAL SHEETS
VIII	COLORADO	IR25-2(187)	152	~~170~~ 177

REVISIONS		

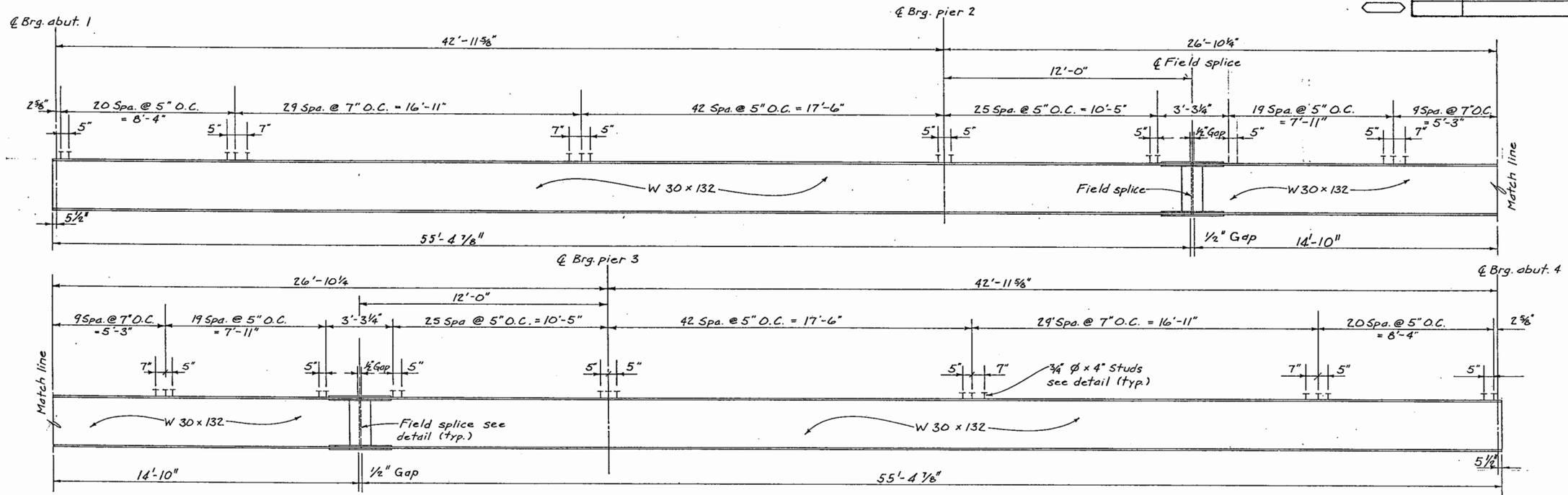

GIRDER ELEVATION

S.PT	BEAM	PN	WN	WPN	TOT.NC	TOT.C	TOT.DL	S.PT	BEAM	PN	WN	WPN	TOT.NC	TOT.C	TOT.DL
1.05	.005	0.000	.030	0.000	.035	.008	.043	3.05	.000	0.000	.003	0.000	.003	.001	.004
1.10	.009	0.000	.058	0.000	.068	.016	.084	3.10	.002	0.000	.013	0.000	.015	.004	.018
1.15	.014	0.000	.085	0.000	.098	.024	.122	3.15	.004	0.000	.028	0.000	.032	.008	.040
1.20	.017	0.000	.107	0.000	.125	.030	.155	3.20	.007	0.000	.047	0.000	.054	.013	.067
1.25	.020	0.000	.126	0.000	.147	.036	.182	3.25	.011	0.000	.067	0.000	.078	.019	.096
1.30	.023	0.000	.141	0.000	.163	.040	.203	3.30	.014	0.000	.087	0.000	.101	.025	.126
1.35	.024	0.000	.150	0.000	.174	.042	.217	3.35	.017	0.000	.107	0.000	.124	.030	.154
1.40	.025	0.000	.154	0.000	.179	.044	.223	3.40	.020	0.000	.124	0.000	.144	.035	.179
1.45	.025	0.000	.154	0.000	.178	.043	.222	3.45	.022	0.000	.138	0.000	.160	.039	.199
1.50	.024	0.000	.148	0.000	.172	.042	.214	3.50	.024	0.000	.148	0.000	.172	.042	.214
1.55	.022	0.000	.138	0.000	.160	.039	.199	3.55	.025	0.000	.154	0.000	.178	.043	.222
1.60	.020	0.000	.124	0.000	.144	.035	.179	3.60	.025	0.000	.154	0.000	.179	.044	.223
1.65	.017	0.000	.107	0.000	.124	.030	.154	3.65	.024	0.000	.150	0.000	.174	.042	.217
1.70	.014	0.000	.087	0.000	.101	.025	.126	3.70	.023	0.000	.141	0.000	.163	.040	.203
1.75	.011	0.000	.067	0.000	.078	.019	.096	3.75	.020	0.000	.126	0.000	.147	.036	.182
1.80	.007	0.000	.047	0.000	.054	.013	.067	3.80	.017	0.000	.107	0.000	.125	.030	.155
1.85	.004	0.000	.028	0.000	.032	.008	.040	3.85	.014	0.000	.085	0.000	.098	.024	.122
1.90	.002	0.000	.013	0.000	.015	.004	.018	3.90	.009	0.000	.058	0.000	.068	.016	.084
1.95	.000	0.000	.003	0.000	.003	.001	.004	3.95	.005	0.000	.030	0.000	.035	.008	.043
2.05	.001	0.000	.009	0.000	.010	.002	.013								
2.10	.005	0.000	.028	0.000	.033	.008	.041								
2.15	.009	0.000	.054	0.000	.063	.015	.078								
2.20	.013	0.000	.084	0.000	.097	.024	.121								
2.25	.018	0.000	.114	0.000	.132	.032	.164								
2.30	.023	0.000	.142	0.000	.165	.040	.205								
2.35	.027	0.000	.166	0.000	.192	.047	.239								
2.40	.029	0.000	.184	0.000	.213	.052	.265								
2.45	.031	0.000	.195	0.000	.227	.055	.282								
2.50	.032	0.000	.199	0.000	.231	.056	.287								
2.55	.031	0.000	.195	0.000	.227	.055	.282								
2.60	.029	0.000	.184	0.000	.213	.052	.265								
2.65	.027	0.000	.166	0.000	.192	.047	.239								
2.70	.023	0.000	.142	0.000	.165	.040	.205								
2.75	.018	0.000	.114	0.000	.132	.032	.164								
2.80	.013	0.000	.084	0.000	.097	.024	.121								
2.85	.009	0.000	.054	0.000	.063	.015	.078								
2.90	.005	0.000	.028	0.000	.033	.008	.041								
2.95	.001	0.000	.009	0.000	.010	.002	.013								

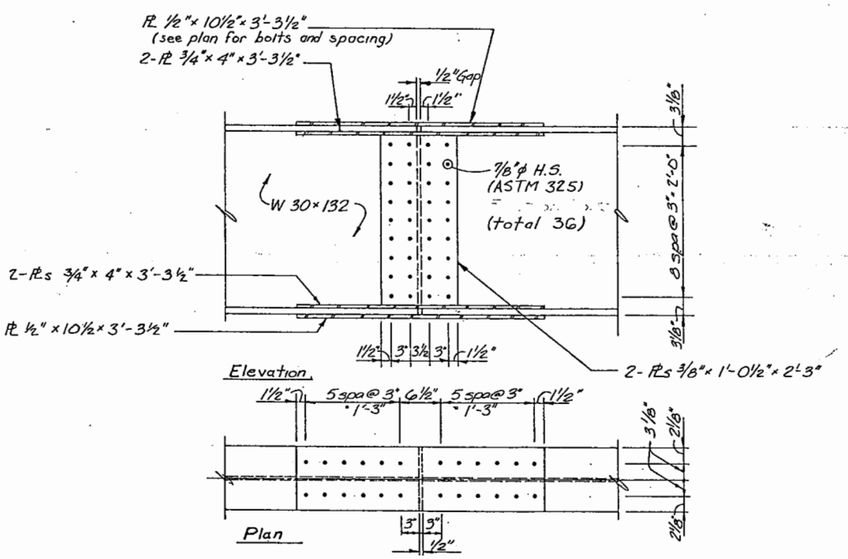

FIELD SPLICE DETAIL

7/8" ϕ H.S. (ASTM 325)

total 24 bolts
(top flange & bottom flange)

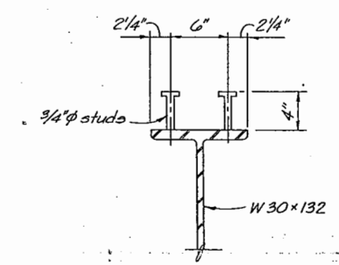

SHEAR CONNECTOR DETAIL

(2 studs per row)

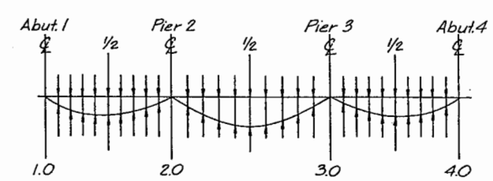

DEFLECTION DIAGRAM

DIVISION OF HIGHWAYS

I25 & 6 AVE. INTERCHANGE - RAMP 'F' OVER BNRR

GIRDER ELEVATION

Designer J. Cornejo		Structure Numbers	F-16-EG
Detailer J. McHenry			
Drawing Number B - 11	of 20	Drawings	

Revision Dates (Preliminary Stage Only)

AS CONSTRUCTED			
NO REVISIONS	9/30/87	REVISED	VOID

FEDERAL ROAD REGION NO.	DIVISION	PROJ. NO.	SHEET NO.	TOTAL SHEETS
VIII	COLORADO	IR25-2(187)	153	77

REVISIONS		

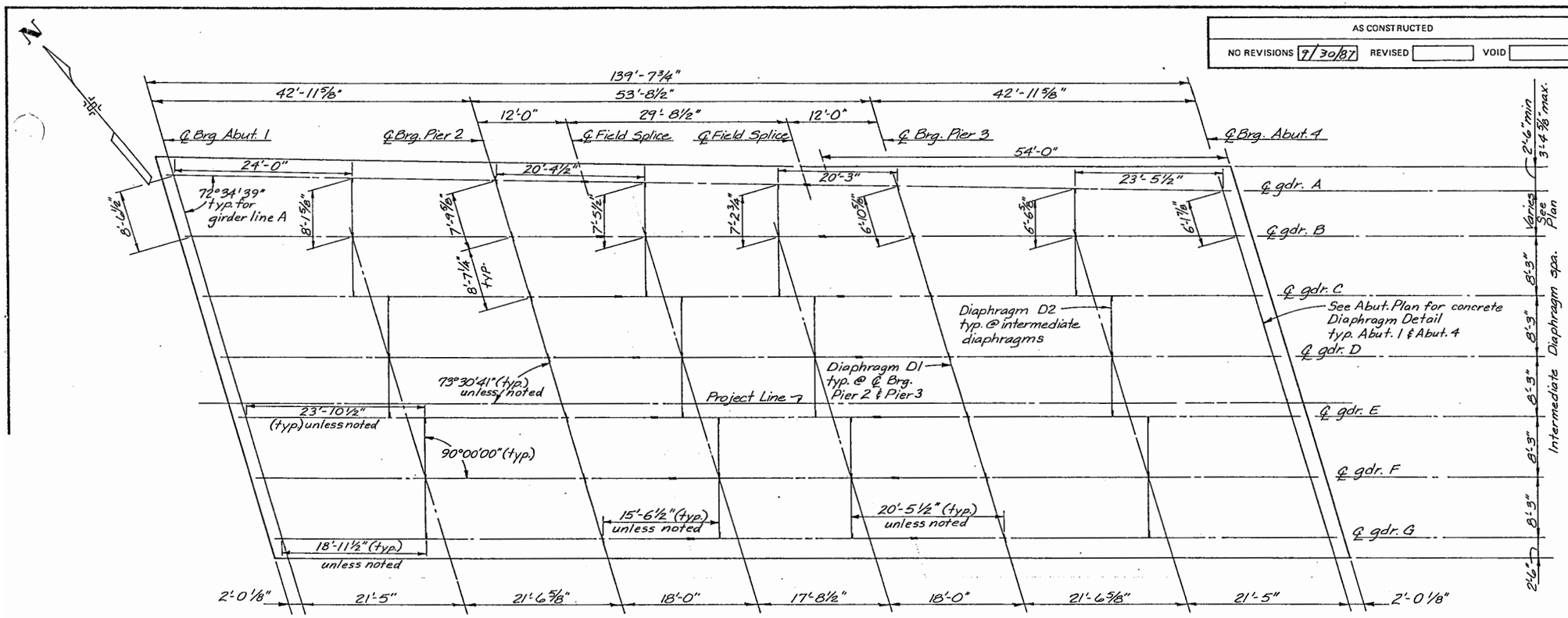

DIAPHRAGM AND SPLICE PLAN

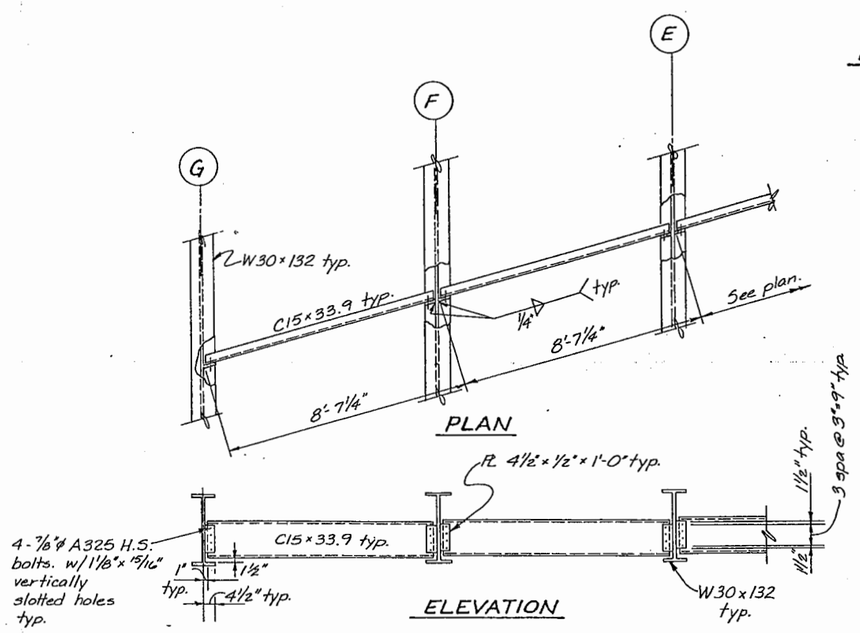

DIAPHRAGM D1
(℄ Brg. Piers)

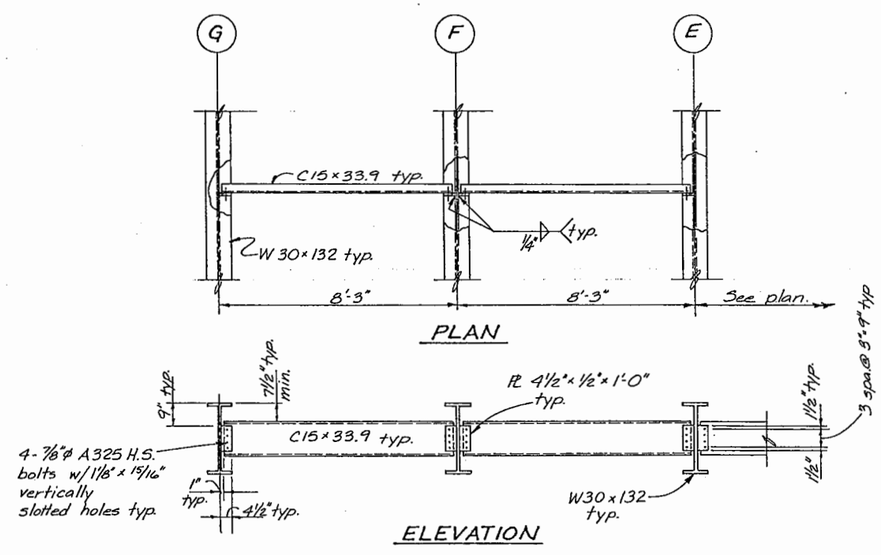

INTERMEDIATE DIAPHRAGM D2

DIVISION OF HIGHWAYS

I-25 & 6 AVE. INTERCHANGE - RAMP 'F' OVER B.N.R.R.

DIAPHRAGM LAYOUT

Designer	J. Cornejo	Structure Numbers	F-16-EG
Detailer	J. McHenry		
Drawing Number B-12		of 20	Drawings

Revision Dates (Preliminary Stage Only)

AS CONSTRUCTED		
NO REVISIONS 9/30/87	REVISED	VOID

FEDERAL ROAD REGION NO.	DIVISION	PROJ. NO.	SHEET NO.	TOTAL SHEETS
VIII	COLORADO	IR25-2(187)	154	77

REVISIONS		

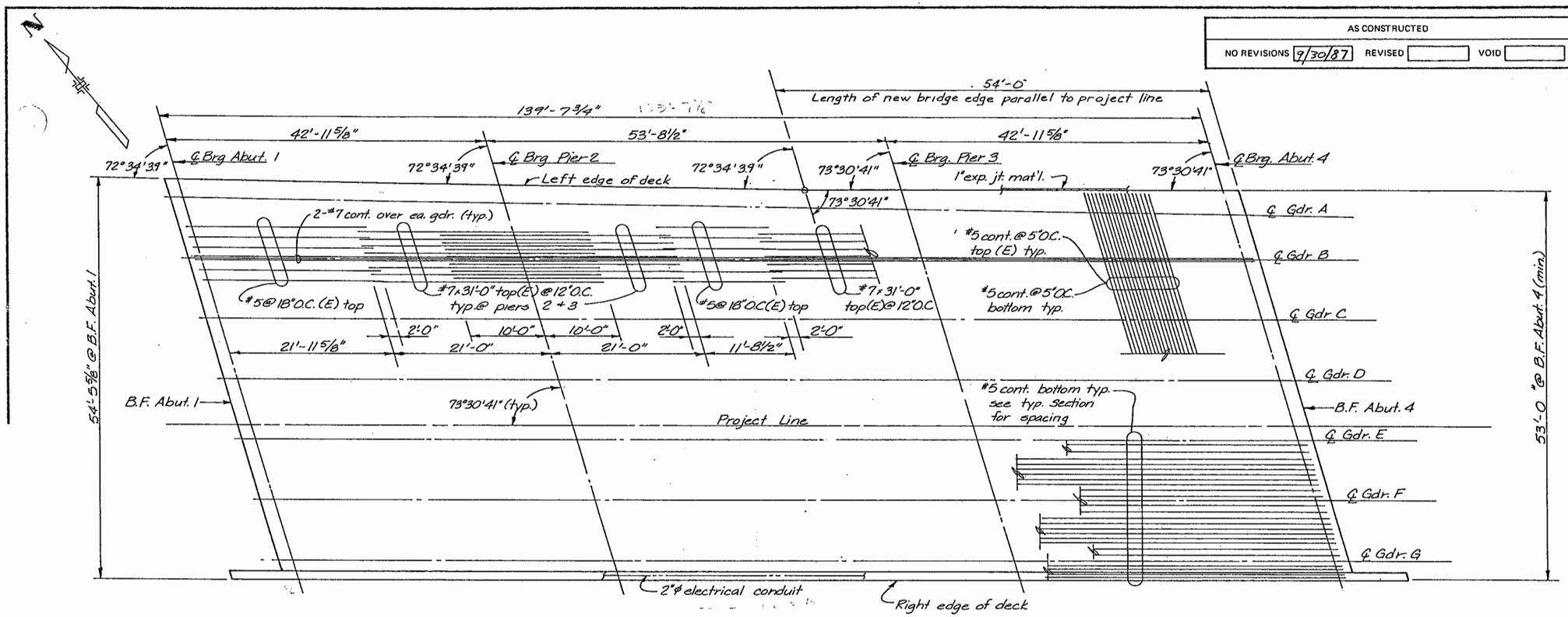

REINFORCING PLAN

Notes:
1. (E) indicates epoxy coated reinf. bars; included in bid item 602, Reinforcing Steel (Epoxy Coated)

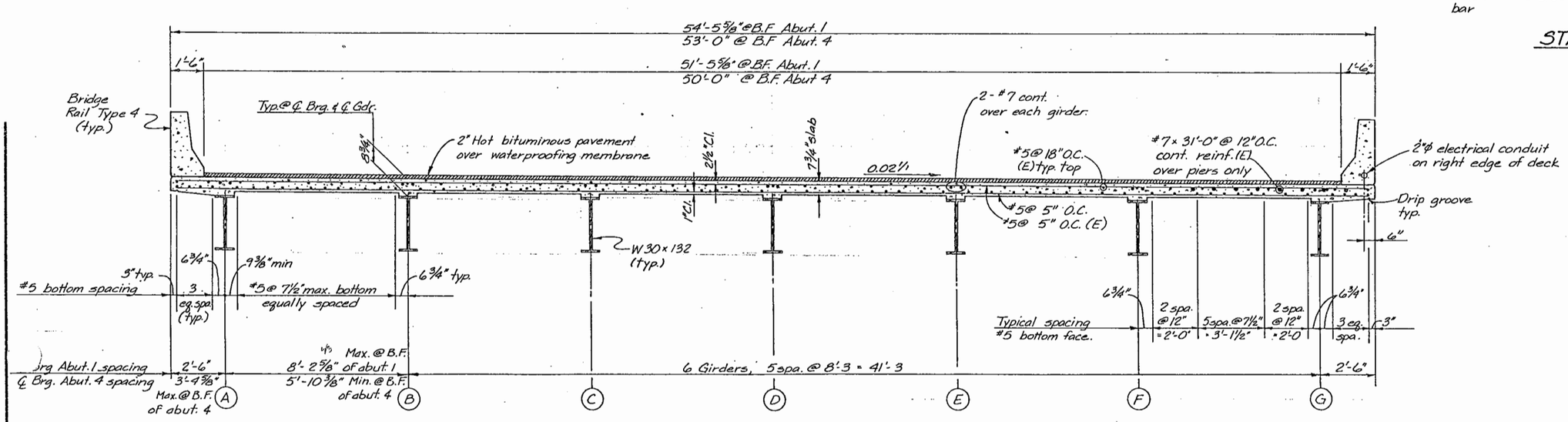

TYPICAL SECTION

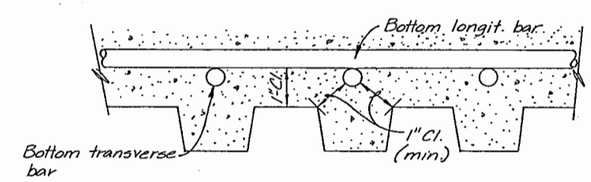

STAY-IN-PLACE FORM DETAIL

DIVISION OF HIGHWAYS

I-25 & 6 AVE, INTERCHANGE - RAMP F OVER BNRR

SUPERSTRUCTURE DETAILS

Designer J. Cornejo		Structure Numbers	F-16-EG
Detailer J. McHenry			
Drawing Number B-13	of 20	Drawings	

Revision Dates (Preliminary Stage Only)

AS CONSTRUCTED			
NO REVISIONS 9/30/87	REVISED		VOID

FEDERAL ROAD REGION NO.	DIVISION	PROJ. NO.	SHEET NO.	TOTAL SHEETS
VIII	COLORADO	IR25-2(187)	155	~~170~~ 17

REVISIONS		

BRIDGE STANDARD 32

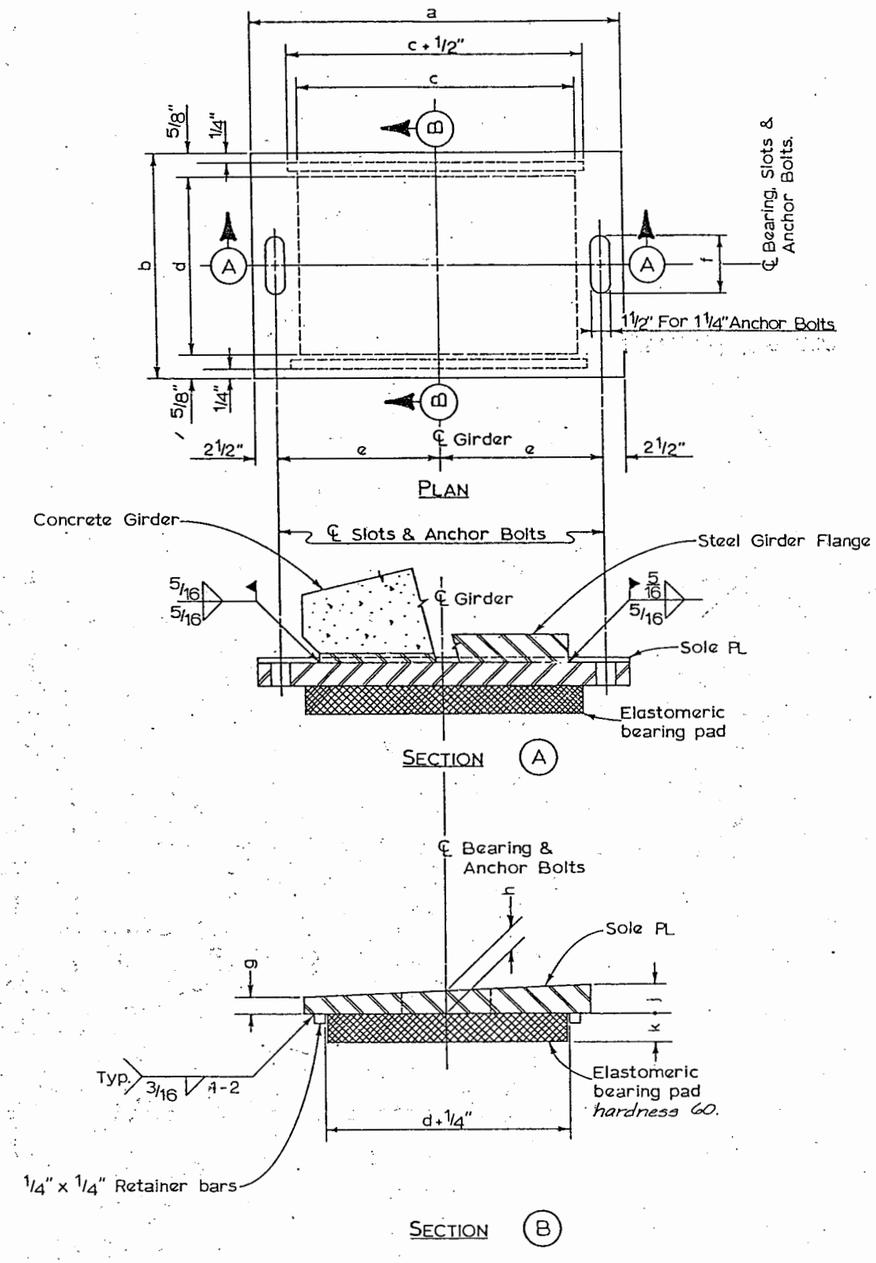

ELASTOMERIC BEARING DETAILS

Location	No. Req'd	Dimensions (Inches) a	b	c	d	e	f	g	h	j	k
Abut. 1	7	1'-6 1/2"	11 1/4"	10 1/2"	10"	6 3/4"	3"	3/4"		13/16"	1/2"
Pier 2	7	1'-6 1/2"	1'-7 1/4"	10 1/2"	1'-6"	6 3/4"	3"	3/4"		7/8"	2 1/2"
Pier 3	7	1'-6 1/2"	1'-7 1/4"	10 1/2"	1'-6"	6 3/4"	2"	3/4"		7/8"	2 1/2"
Abut. 4	7	1'-6 1/2"	11 1/4"	10 1/2"	10"	6 3/4"	3"	3/4"		13/16"	1/2"

NOTES:

ANCHOR BOLT NUTS SHALL BE SNUGGED AND JAMMED WITH JAM NUTS AT FIXED BEARINGS. AT EXPANSION BEARINGS, PROVIDE 1/4" CLEARANCE BETWEEN JAM NUT AND SOLE PLATE UNDER ALL TEMPERATURE CONDITIONS PRIOR TO JAMMING.

DO NOT PAINT STEEL SURFACES IN CONTACT WITH ELASTOMERIC PAD.

ELASTOMERIC BEARING PADS SHALL NOT BE PAID FOR SEPARATELY, BUT WILL BE INCLUDED IN THE WORK.

STRUCTURAL STEEL FOR BEARINGS WILL BE MEASURED AND PAID FOR IN ACCORDANCE WITH ITEM 509, STRUCTURAL STEEL.

DIVISION OF HIGHWAYS

I-25 & 6 AVE. INTERCHANGE - RAMP 'F' OVER B.N.R.R.

BEARING DETAIL

Designer	J. Cornejo	Structure Numbers	F-16-EG
Detailer	S. HILL		
Drawing Number B-14 of 20 Drawings			

Revision Dates (Preliminary Stage Only)

(11-1-70)

CHECKED BY
DETAILED BY
QUANTITIES BY
CHECKED BY
S. HILL 12-7
JWC 11/1/70

AS CONSTRUCTED			
NO REVISIONS	9/30/87	REVISED	VOID

FED. ROAD REGION	DIVISION	PROJ. NO.	SHEET NO.	TOTAL SHEETS
XIII	COLO.	IR25-2(187)	156	~~170~~/77

REVISIONS		

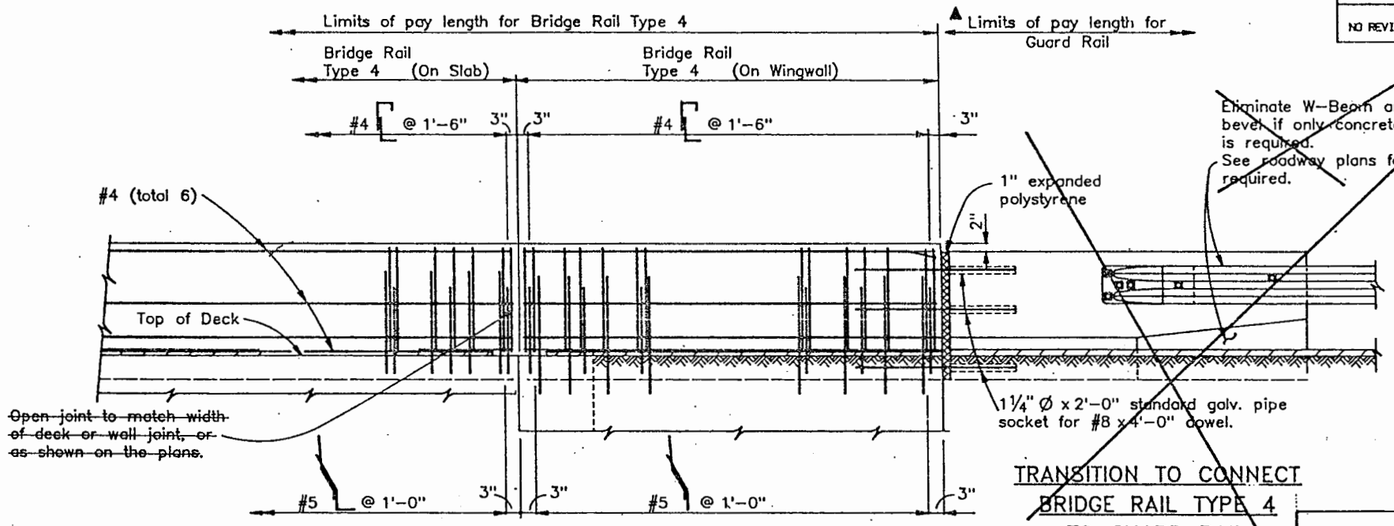

~~Eliminate W-Beam and barrier bevel if only concrete barrier is required. See roadway plans for transition required.~~

ELEVATION

(RIGHT SIDE OF BRIDGE SHOWN. LEFT SIDE SIMILAR EXCEPT AS NOTED.)

TRANSITION TO CONNECT BRIDGE RAIL TYPE 4 TO GUARD RAIL

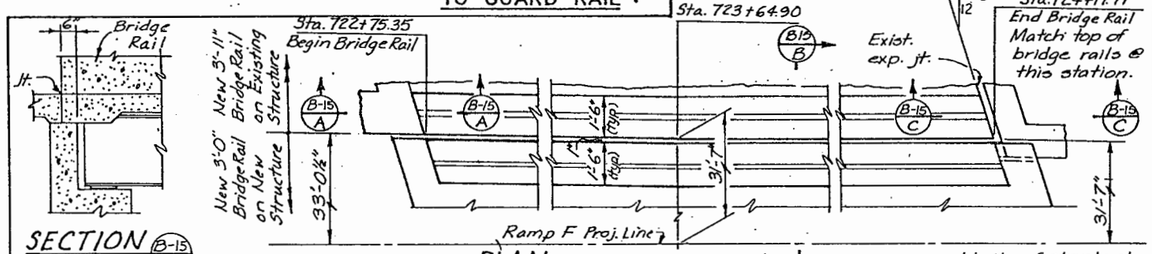

SECTION (B-15 A)

PLAN (Left Side of New Bridge)

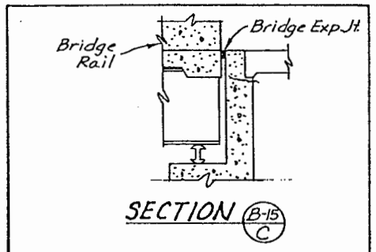

SECTION (B-15 C)

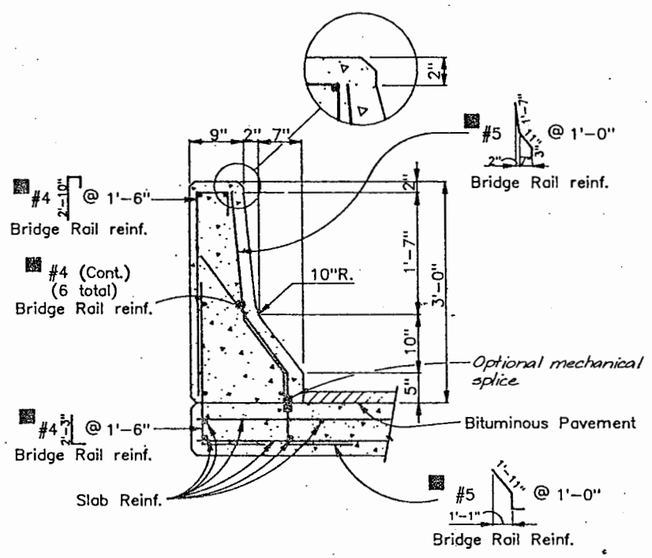

SECTION AT SLAB

(RIGHT SIDE)

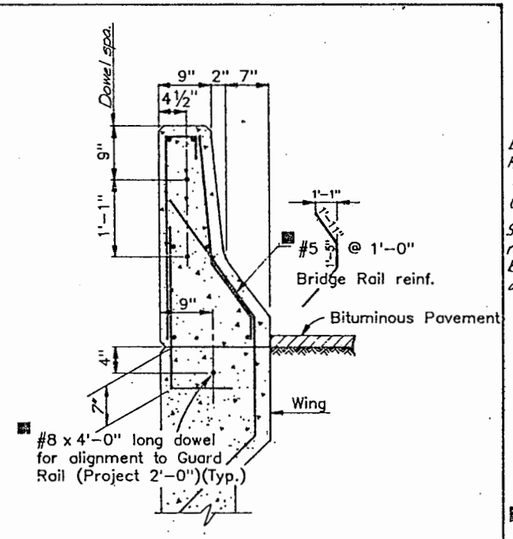

SECTION AT WING

(LEFT SIDE)

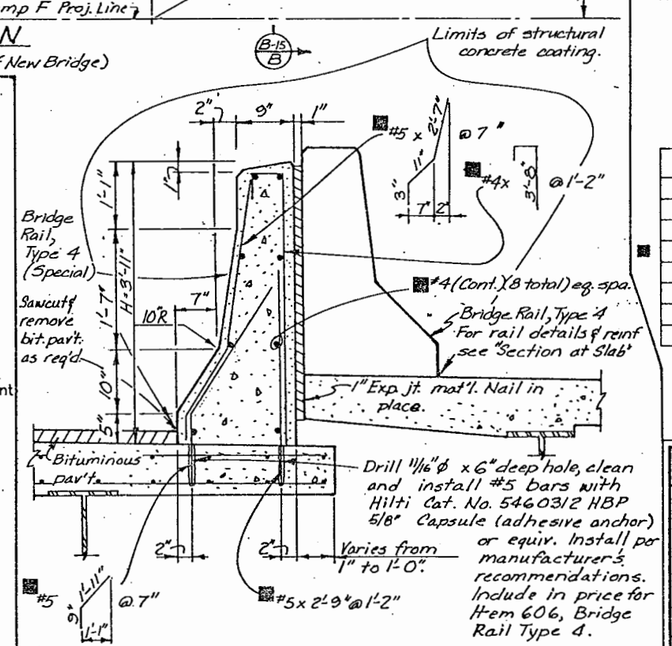

SECTION (B-15 B)

BRIDGE STANDARD 16
(MODIFIED, SPECIAL THIS PROJECT)

NOTES

BACKFILL WINGWALLS AND RETAINING WALLS BEFORE BARRIER IS PLACED.

ALL BRIDGE RAIL CONCRETE SHALL BE CLASS D.

LONGITUDINAL REINFORCEMENT SHALL STOP AT ALL EXPANSION JOINTS.

BRIDGE RAIL SHALL BE CONSTRUCTED PLUMB.

BRIDGE RAIL CONCRETE (CLASS D) AND BRIDGE RAIL REINFORCEMENT SHALL BE INCLUDED IN ITEM 606 – BRIDGE RAIL TYPE 4.

▲ FOR GUARD RAIL TYPE 4, SEE STD. M-606-12 FOR DETAILS.

▲ ~~FOR GUARD RAIL TYPE 3, SEE STD. M-606-12 FOR DETAILS OF TRANSITION AND ATTACHMENT TO CONCRETE BARRIER. SEE STD. M-606-1 FOR DETAILS OF GUARD RAIL.~~

DESIGN DATA

REINFORCED CONCRETE:

CLASS D CONCRETE: f_c = 1,800 psi, n = 8

REINFORCING STEEL: f_s = 24,000 psi

INFORMATION ONLY

Description	Unit	Per Lin.Ft.
Concrete Class D (in non-modified region.)	Cu. Yd.	0.11
Reinforcing Steel	Lb.	13.8

■ Epoxy coated. Only when Item 602, Reinforcing Steel (Epoxy Coated) is shown on the Summary of Quantities.

DIVISION OF HIGHWAYS

I25 & 6TH AVE. INTERCHANGE-RAMP F OVER BNRR

BRIDGE RAIL TYPE 4

BRIDGE RAIL TYPE 4 (SPECIAL)

DESIGNER	J. Cornejo	STRUCTURE NUMBERS	F-16-EG
DETAILER	S. Kobayashi		
DRAWING NUMBER B-15		OF 20	DRAWINGS

DESIGNED BY	INITIAL	DATE	CHECKED BY	INITIAL	DATE
DESIGNED BY	JMC	11/85	CHECKED BY	JMC	11/85
CHECKED BY	JMC	11/85	QUANTITIES BY	JMC	11/85
DETAILED BY	SHK	11/85	CHECKED BY		

E OF COLORADO
E DEPARTMENT OF HIGHWAYS
SIONS OF HIGHWAYS:
). M-FORM NO. 117:
OCT. 1983:
WO number 06. 18:45:33 _DVA1 : (DRAW.STDS.MSTDS)

BRSTD16

REVISION DATES								
6/85				(PRELIMINARY STAGE ONLY)				16

FEDERAL ROAD REGION NO.	DIVISION	PROJ. NO.	SHEET NO.	TOTAL SHEETS
VIII	COLORADO	IR25-2(187)	157	~~170~~ 177

AS CONSTRUCTED

NO REVISIONS 7/20/87 REVISED ____ VOID ____

LONGITUDINAL LINE: 1ST LT EDGE OF DECK

BENT LINE DESCRIPTION OR FRACTIONAL POINT DESIGNATION	STATION	OFFSET	ELEVATION	COORDINATES FROM LAYOUT LINE OFFSET X	COORDINATES FROM LAYOUT LINE ORDINATE Y	BENT LINE LENGTH FROM Y-AXIS or OFFSET FROM EXTERIOR GIRDER	GIRDER LINE LENGTH
END WING 1	722+65.7562	-33.1206	5239.4843	-33.1206	-18.8038	-34.5411	-11.0649
BF ABUT 1	722+74.7999	-32.9730	5239.3391	-32.9730	-9.7601	-34.3871	-2.0200
CL ABUT 1	722+76.8197	-32.9400	5239.3070	-32.9400	-7.7403	-34.3528	0.0000
X-1	722+79.7590	-32.8920	5239.2618	-32.8920	-4.8010	-2.4876	2.9397
X-2	722+81.9178	-32.8568	5239.2299	-32.8568	-2.6422	-2.4876	5.0988
X-3	722+84.0765	-32.8216	5239.1989	-32.8216	-.4835	-2.4876	7.2578
X-4	722+86.2353	-32.7863	5239.1690	-32.7863	1.6753	-2.4876	9.4169
X-5	722+88.3940	-32.7511	5239.1401	-32.7511	3.8340	-2.4876	11.5759
X-6	722+90.5528	-32.7159	5239.1122	-32.7159	5.9928	-2.4876	13.7349
X-7	722+92.7115	-32.6807	5239.0853	-32.6807	8.1515	-2.4876	15.8940
X-8	722+94.8703	-32.6454	5239.0594	-32.6454	10.3103	-2.4876	18.0530
X-9	722+97.0291	-32.6102	5239.0345	-32.6102	12.4691	-2.4876	20.2121
X-10	722+99.1878	-32.5750	5239.0106	-32.5750	14.6278	-2.4876	22.3711
X-11	723+01.3466	-32.5397	5238.9877	-32.5397	16.7866	-2.4876	24.5301
X-12	723+03.5053	-32.5045	5238.9659	-32.5045	18.9453	-2.4876	26.6892
X-13	723+05.6641	-32.4693	5238.9450	-32.4693	21.1041	-2.4876	28.8482
X-14	723+07.8228	-32.4340	5238.9250	-32.4340	23.2628	-2.4876	31.0073
X-15	723+09.9816	-32.3988	5238.9061	-32.3988	25.4216	-2.4876	33.1663
X-16	723+12.1403	-32.3636	5238.8882	-32.3636	27.5803	-2.4876	35.3254
X-17	723+14.2991	-32.3284	5238.8712	-32.3284	29.7391	-2.4876	37.4844
X-18	723+16.4578	-32.2931	5238.8552	-32.2931	31.8978	-2.4876	39.6434
X-19	723+18.6166	-32.2579	5238.8402	-32.2579	34.0566	-2.4876	41.8025
CL PIER 2	723+19.9947	-32.2354	5238.8311	-32.2354	35.4347	-33.6179	43.1808
CL PIER 2	723+19.9947	-32.2354	5238.8311	-32.2354	35.4347	-33.6179	43.1808
X-1	723+23.4739	-32.1786	5238.8099	-32.1786	38.9139	-2.4876	46.6605
X-2	723+26.1726	-32.1346	5238.7952	-32.1346	41.6126	-2.4876	49.3595
X-3	723+28.8712	-32.0905	5238.7808	-32.0905	44.3112	-2.4876	52.0584
X-4	723+31.5698	-32.0465	5238.7664	-32.0465	47.0098	-2.4876	54.7574
X-5	723+34.2684	-32.0025	5238.7520	-32.0025	49.7084	-2.4876	57.4564
X-6	723+36.9670	-31.9584	5238.7377	-31.9584	52.4070	-2.4876	60.1553
X-7	723+39.6656	-31.9144	5238.7233	-31.9144	55.1056	-2.4876	62.8543
X-8	723+42.3642	-31.8703	5238.7089	-31.8703	57.8042	-2.4876	65.5533
X-9	723+45.0628	-31.8263	5238.6945	-31.8263	60.5028	-2.4876	68.2522
X-10	723+47.7614	-31.7823	5238.6802	-31.7823	63.2014	-2.4876	70.9512
X-11	723+50.4601	-31.7382	5238.6658	-31.7382	65.9001	-2.4876	73.6502
X-12	723+53.1587	-31.6942	5238.6514	-31.6942	68.5987	-2.4876	76.3492
X-13	723+55.8573	-31.6501	5238.6370	-31.6501	71.2973	-2.4876	79.0481
X-14	723+58.5559	-31.6061	5238.6227	-31.6061	73.9959	-2.4876	81.7471
X-15	723+61.2545	-31.5621	5238.6083	-31.5621	76.6945	-2.4876	84.4461
X-16	723+63.9531	-31.5180	5238.5939	-31.5180	79.3931	-2.4876	87.1450
X-17	723+66.6521	-31.5000	5238.5801	-31.5000	82.0921	-2.5136	89.4062
X-18	723+69.3515	-31.5000	5238.5666	-31.5000	84.7915	-2.5577	92.1056
X-19	723+72.0508	-31.5000	5238.5531	-31.5000	87.4908	-2.6017	94.8049
PIER 3	723+73.9239	-31.5000	5238.5437	-31.5000	89.3639	-32.8510	96.6780
PIER 3	723+73.9239	-31.5000	5238.5437	-31.5000	89.3639	-32.8510	96.6780
X-1	723+76.9095	-31.5000	5238.5288	-31.5000	92.3495	-2.6810	99.6635
X-2	723+79.0688	-31.5000	5238.5180	-31.5000	94.5088	-2.7162	101.8229
X-3	723+81.2281	-31.5000	5238.5072	-31.5000	96.6681	-2.7515	103.9822
X-4	723+83.3874	-31.5000	5238.4964	-31.5000	98.8274	-2.7867	106.1415
X-5	723+85.5468	-31.5000	5238.4856	-31.5000	100.9868	-2.8219	108.3009
X-6	723+87.7061	-31.5000	5238.4748	-31.5000	103.1461	-2.8572	110.4602
X-7	723+89.8654	-31.5000	5238.4640	-31.5000	105.3054	-2.8924	112.6195
X-8	723+92.0248	-31.5000	5238.4532	-31.5000	107.4648	-2.9276	114.7788
X-9	723+94.1841	-31.5000	5238.4424	-31.5000	109.6241	-2.9629	116.9382
X-10	723+96.3434	-31.5000	5238.4316	-31.5000	111.7834	-2.9981	119.0975
X-11	723+98.5027	-31.5000	5238.4208	-31.5000	113.9427	-3.0333	121.2568
X-12	724+00.6621	-31.5000	5238.4100	-31.5000	116.1021	-3.0686	123.4162
X-13	724+02.8214	-31.5000	5238.3989	-31.5000	118.2614	-3.1038	125.5755
X-14	724+04.9807	-31.5000	5238.3874	-31.5000	120.4207	-3.1390	127.7348
X-15	724+07.1401	-31.5000	5238.3755	-31.5000	122.5801	-3.1743	129.8941
X-16	724+09.2994	-31.5000	5238.3633	-31.5000	124.7394	-3.2095	132.0535
X-17	724+11.4587	-31.5000	5238.3507	-31.5000	126.8987	-3.2447	134.2128
X-18	724+13.6180	-31.5000	5238.3377	-31.5000	129.0580	-3.2800	136.3721
X-19	724+15.7774	-31.5000	5238.3243	-31.5000	131.2174	-3.3152	138.5315
CL ABUT 4	724+16.8904	-31.5000	5238.3172	-31.5000	132.3304	-32.8510	139.6445
BF ABUT 4	724+18.9004	-31.5000	5238.3042	-31.5000	134.3404	-32.8510	141.6545
END WING 4	724+27.9004	-31.5000	5238.2420	-31.5000	143.3404	-32.8510	150.6545

LONGITUDINAL LINE: 1ST LT GUTTERLINE

BENT LINE DESCRIPTION OR FRACTIONAL POINT DESIGNATION	STATION	OFFSET	ELEVATION	COORDINATES FROM LAYOUT LINE OFFSET X	COORDINATES FROM LAYOUT LINE ORDINATE Y	BENT LINE LENGTH FROM Y-AXIS or OFFSET FROM EXTERIOR GIRDER	GIRDER LINE LENGTH
END WING 1	722+66.2002	-31.6206	5239.4310	-31.6206	-18.3598	-32.9767	-11.0649
BF ABUT 1	722+75.2439	-31.4730	5239.2901	-31.4730	-9.3161	-32.8228	-2.0200
CL ABUT 1	722+77.2637	-31.4400	5239.2591	-31.4400	-7.2963	-32.7884	0.0000
X-1	722+79.7347	-31.3997	5239.2224	-31.3997	-4.8253	-.9950	2.4713
X-2	722+81.8934	-31.3644	5239.1913	-31.3644	-2.6666	+.9950	4.6304
X-3	722+84.0522	-31.3292	5239.1612	-31.3292	-.5078	-.9950	6.7894
X-4	722+86.2109	-31.2940	5239.1321	-31.2940	1.6509	+.9950	8.9484
X-5	722+88.3697	-31.2588	5239.1040	-31.2588	3.8097	-.9950	11.1075
X-6	722+90.5284	-31.2235	5239.0768	-31.2235	5.9684	-.9950	13.2665
X-7	722+92.6872	-31.1883	5239.0506	-31.1883	8.1272	-.9950	15.4256
X-8	722+94.8459	-31.1531	5239.0254	-31.1531	10.2859	-.9950	17.5846
X-9	722+97.0047	-31.1178	5239.0011	-31.1178	12.4447	-.9950	19.7436
X-10	722+99.1634	-31.0826	5238.9777	-31.0826	14.6034	-.9950	21.9027
X-11	723+01.3222	-31.0474	5238.9554	-31.0474	16.7622	-.9950	24.0617
X-12	723+03.4810	-31.0121	5238.9339	-31.0121	18.9210	-.9950	26.2208
X-13	723+05.6397	-30.9769	5238.9135	-30.9769	21.0797	-.9950	28.3798
X-14	723+07.7985	-30.9417	5238.8939	-30.9417	23.2385	-.9950	30.5388
X-15	723+09.9572	-30.9065	5238.8753	-30.9065	25.3972	-.9950	32.6979
X-16	723+12.1160	-30.8712	5238.8577	-30.8712	27.5560	-.9950	34.8569
X-17	723+14.2747	-30.8360	5238.8409	-30.8360	29.7147	-.9950	37.0160
X-18	723+16.4335	-30.8008	5238.8251	-30.8008	31.8735	-.9950	39.1750
X-19	723+18.5922	-30.7655	5238.8103	-30.7655	34.0322	-.9950	41.3341
CL PIER 2	723+20.4387	-30.7354	5238.7983	-30.7354	35.8787	-32.0536	43.1808
CL PIER 2	723+20.4387	-30.7354	5238.7983	-30.7354	35.8787	-32.0536	43.1808
X-1	723+23.4496	-30.6863	5238.7802	-30.6863	38.8896	-.9950	46.1921
X-2	723+26.1482	-30.6422	5238.7654	-30.6422	41.5882	-.9950	48.8910
X-3	723+28.8468	-30.5982	5238.7511	-30.5982	44.2868	-.9950	51.5899
X-4	723+31.5454	-30.5541	5238.7367	-30.5541	46.9854	-.9950	54.2890
X-5	723+34.2440	-30.5101	5238.7223	-30.5101	49.6840	-.9950	56.9879
X-6	723+36.9426	-30.4661	5238.7079	-30.4661	52.3826	-.9950	59.6869
X-7	723+39.6413	-30.4220	5238.6936	-30.4220	55.0813	-.9950	62.3859
X-8	723+42.3399	-30.3780	5238.6792	-30.3780	57.7799	-.9950	65.0849
X-9	723+45.0385	-30.3339	5238.6648	-30.3339	60.4785	-.9950	67.7838
X-10	723+47.7371	-30.2899	5238.6504	-30.2899	63.1771	-.9950	70.4828
X-11	723+50.4357	-30.2459	5238.6361	-30.2459	65.8757	-.9950	73.1818
X-12	723+53.1343	-30.2018	5238.6217	-30.2018	68.5743	-.9950	75.8807
X-13	723+55.8329	-30.1578	5238.6073	-30.1578	71.2729	-.9950	78.5797
X-14	723+58.5315	-30.1137	5238.5930	-30.1137	73.9715	-.9950	81.2787
X-15	723+61.2301	-30.0697	5238.5786	-30.0697	76.6701	-.9950	83.9776
X-16	723+63.9288	-30.0257	5238.5642	-30.0257	79.3688	-.9950	86.6766
X-17	723+66.6277	-30.0000	5238.5502	-30.0000	82.0677	-1.0134	88.9377
X-18	723+69.3270	-30.0000	5238.5367	-30.0000	84.7670	-1.0575	91.6371
X-19	723+72.0263	-30.0000	5238.5232	-30.0000	87.4663	-1.1015	94.3364
CL PIER 3	723+74.3679	-30.0000	5238.5115	-30.0000	89.8079	-31.2867	96.6780
CL PIER 3	723+74.3679	-30.0000	5238.5115	-30.0000	89.8079	-31.2867	96.6780
X-1	723+76.8850	-30.0000	5238.4989	-30.0000	92.3250	-1.1808	99.1951
X-2	723+79.0443	-30.0000	5238.4861	-30.0000	94.4843	-1.2160	101.3544
X-3	723+81.2036	-30.0000	5238.4773	-30.0000	96.6436	-1.2513	103.5137
X-4	723+83.3630	-30.0000	5238.4665	-30.0000	98.8030	-1.2865	105.6730
X-5	723+85.5223	-30.0000	5238.4557	-30.0000	100.9623	-1.3217	107.8324
X-6	723+87.6816	-30.0000	5238.4449	-30.0000	103.1216	-1.3570	109.9917
X-7	723+89.8410	-30.0000	5238.4341	-30.0000	105.2810	-1.3922	112.1510
X-8	723+92.0003	-30.0000	5238.4233	-30.0000	107.4403	-1.4274	114.3104
X-9	723+94.1596	-30.0000	5238.4125	-30.0000	109.5996	-1.4627	116.4697
X-10	723+96.3189	-30.0000	5238.4017	-30.0000	111.7589	-1.4979	118.6290
X-11	723+98.4783	-30.0000	5238.3909	-30.0000	113.9183	-1.5331	120.7883
X-12	724+00.6376	-30.0000	5238.3801	-30.0000	116.0776	-1.5684	122.9477
X-13	724+02.7969	-30.0000	5238.3690	-30.0000	118.2369	-1.6036	125.1070
X-14	724+04.9563	-30.0000	5238.3575	-30.0000	120.3963	-1.6388	127.2663
X-15	724+07.1156	-30.0000	5238.3457	-30.0000	122.5556	-1.6741	129.4257
X-16	724+09.2749	-30.0000	5238.3334	-30.0000	124.7149	-1.7093	131.5850
X-17	724+11.4342	-30.0000	5238.3208	-30.0000	126.8742	-1.7445	133.7443
X-18	724+13.5936	-30.0000	5238.3078	-30.0000	129.0336	-1.7798	135.9036
X-19	724+15.7529	-30.0000	5238.2944	-30.0000	131.1929	-1.8150	138.0630
CL ABUT 4	724+17.3344	-30.0000	5238.2844	-30.0000	132.7744	-31.2867	139.6445
BF ABUT 4	724+19.3444	-30.0000	5238.2713	-30.0000	134.7844	-31.2867	141.6545
END WING 4	724+28.3444	-30.0000	5238.2087	-30.0000	143.7844	-31.2867	150.6545

LONGITUDINAL LINE: CL GIRDER A

BENT LINE DESCRIPTION OR FRACTIONAL POINT DESIGNATION	STATION	OFFSET	ELEVATION	COORDINATES FROM LAYOUT LINE OFFSET X	COORDINATES FROM LAYOUT LINE ORDINATE Y	BENT LINE LENGTH FROM Y-AXIS or OFFSET FROM EXTERIOR GIRDER	GIRDER LINE LENGTH
END WING 1	722+66.4962	-30.6206	5239.3957	-30.6206	-18.0638	-31.9338	-11.0649
BF ABUT 1	722+75.5399	-30.4730	5239.2577	-30.4730	-9.0201	-31.7799	-2.0200
CL ABUT 1	722+77.5597	-30.4400	5239.2275	-30.4400	-7.0003	-31.7455	0.0000
F-1	722+79.7184	-30.4048	5239.1961	-30.4048	-4.8416		2.1590
F-2	722+81.8772	-30.3695	5239.1656	-30.3695	-2.6828		4.3181
F-3	722+84.0359	-30.3343	5239.1361	-30.3343	-.5241		6.4771
F-4	722+86.1947	-30.2991	5239.1075	-30.2991	1.6347		8.6362
F-5	722+88.3534	-30.2639	5239.0799	-30.2639	3.7934		10.7952
F-6	722+90.5122	-30.2286	5239.0532	-30.2286	5.9522		12.9542
F-7	722+92.6710	-30.1934	5239.0275	-30.1934	8.1110		15.1133
F-8	722+94.8297	-30.1582	5239.0027	-30.1582	10.2697		17.2723
F-9	722+96.9885	-30.1229	5238.9788	-30.1229	12.4285		19.4314
F-10	722+99.1472	-30.0877	5238.9558	-30.0877	14.5872		21.5904
F-11	723+01.3060	-30.0525	5238.9338	-30.0525	16.7460		23.7494
F-12	723+03.4647	-30.0172	5238.9127	-30.0172	18.9047		25.9085
F-13	723+05.6235	-29.9820	5238.8925	-29.9820	21.0635		28.0675
F-14	723+07.7822	-29.9468	5238.8732	-29.9468	23.2222		30.2266
F-15	723+09.9410	-29.9116	5238.8548	-29.9116	25.3810		32.3856
F-16	723+12.0997	-29.8763	5238.8373	-29.8763	27.5397		34.5446
F-17	723+14.2585	-29.8411	5238.8208	-29.8411	29.6985		36.7037
F-18	723+16.4172	-29.8059	5238.8051	-29.8059	31.8572		38.8627
F-19	723+18.5760	-29.7706	5238.7903	-29.7706	34.0160		41.0218
CL PIER 2	723+20.7347	-29.7354	5238.7765	-29.7354	36.1747	-31.0107	43.1808
CL PIER 2	723+20.7347	-29.7354	5238.7765	-29.7354	36.1747	-31.0107	43.1808
F-1	723+23.4334	-29.6914	5238.7604	-29.6914	38.8734		45.8798
F-2	723+26.1320	-29.6473	5238.7456	-29.6473	41.5720		48.5788
F-3	723+28.8306	-29.6033	5238.7312	-29.6033	44.2706		51.2777
F-4	723+31.5292	-29.5592	5238.7169	-29.5592	46.9692		53.9767
F-5	723+34.2278	-29.5152	5238.7025	-29.5152	49.6678		56.6757
F-6	723+36.9264	-29.4712	5238.6881	-29.4712	52.3664		59.3746
F-7	723+39.6250	-29.4271	5238.6738	-29.4271	55.0650		62.0736
F-8	723+42.3236	-29.3831	5238.6594	-29.3831	57.7636		64.7726
F-9	723+45.0222	-29.3390	5238.6450	-29.3390	60.4622		67.4715
F-10	723+47.7209	-29.2950	5238.6306	-29.2950	63.1609		70.1705
F-11	723+50.4195	-29.2510	5238.6163	-29.2510	65.8595		72.8695
F-12	723+53.1181	-29.2069	5238.6019	-29.2069	68.5581		75.5685
F-13	723+55.8167	-29.1629	5238.5875	-29.1629	71.2567		78.2674
F-14	723+58.5153	-29.1188	5238.5731	-29.1188	73.9553		80.9664
F-15	723+61.2139	-29.0748	5238.5588	-29.0748	76.6539		83.6654
F-16	723+63.9125	-29.0308	5238.5444	-29.0308	79.3525		86.3643
F-17	723+66.6111	-28.9867	5238.5300	-28.9867	82.0511		89.0633
F-18	723+69.3097	-28.9427	5238.5156	-28.9427	84.7497		91.7623
F-19	723+72.0084	-28.8986	5238.5013	-28.8986	87.4484		94.4612
CL PIER 3	723+74.7070	-28.8546	5238.4869	-28.8546	90.1470	-30.0921	97.1602
CL PIER 3	723+74.7070	-28.8546	5238.4869	-28.8546	90.1470	-30.0921	97.1602
F-1	723+76.8657	-28.8194	5238.4754	-28.8194	92.3057		99.3193
F-2	723+79.0245	-28.7841	5238.4639	-28.7841	94.4645		101.4783
F-3	723+81.1832	-28.7489	5238.4524	-28.7489	96.6232		103.6373
F-4	723+83.3420	-28.7137	5238.4409	-28.7137	98.7820		105.7964
F-5	723+85.5007	-28.6784	5238.4294	-28.6784	100.9407		107.9554
F-6	723+87.6595	-28.6432	5238.4179	-28.6432	103.0995		110.1145
F-7	723+89.8182	-28.6080	5238.4064	-28.6080	105.2582		112.2735
F-8	723+91.9770	-28.5728	5238.3949	-28.5728	107.4170		114.4325
F-9	723+94.1357	-28.5375	5238.3834	-28.5375	109.5757		116.5916
F-10	723+96.2945	-28.5023	5238.3719	-28.5023	111.7345		118.7506
F-11	723+98.4532	-28.4671	5238.3604	-28.4671	113.8932		120.9097
F-12	724+00.6120	-28.4318	5238.3489	-28.4318	116.0520		123.0687
F-13	724+02.7708	-28.3966	5238.3371	-28.3966	118.2108		125.2277
F-14	724+04.9295	-28.3614	5238.3249	-28.3614	120.3695		127.3868
F-15	724+07.0883	-28.3261	5238.3124	-28.3261	122.5283		129.5458
F-16	724+09.2470	-28.2909	5238.2994	-28.2909	124.6870		131.7049
F-17	724+11.4058	-28.2557	5238.2861	-28.2557	126.8458		133.8639
F-18	724+13.5645	-28.2205	5238.2724	-28.2205	129.0045		136.0229
F-19	724+15.7233	-28.1852	5238.2583	-28.1852	131.1633		138.1820
CL ABUT 4	724+17.8820	-28.1500	5238.2438	-28.1500	133.3220	-29.3573	140.3410
BF ABUT 4	724+19.9018	-28.1170	5238.2300	-28.1170	135.3418	-29.3230	142.3611
END WING 4	724+28.9455	-27.9694	5238.1637	-27.9694	144.3855	-29.1690	151.4059

NOTE: ELEVATIONS ARE AT TOP OF CONCRETE DECK .1667 FEET BELOW FINISHED GRADE.

BRIDGE STANDARD 3

REVISIONS		

DIVISION OF HIGHWAYS

I-25 & 6 AVE. INTERCHANGE - RAMP 'F' OVER B.N.R.R.

BRIDGE DECK ELEVATIONS

Designer	J. Cornejo	Structure Numbers	F-16-EG
Detailer	J. McHenry		
Drawing Number B-16	of 20		

FEDERAL ROAD REGION NO.	DIVISION	PROJ. NO.	SHEET NO.	TOTAL SHEETS
VIII	COLORADO	IR25-2(187)	158	~~170~~ 177

AS CONSTRUCTED

NO REVISIONS 9/30/87 REVISED ____ VOID ____

LONGITUDINAL LINE: CL GIRDER B

BENT LINE DESCRIPTION OR FRACTIONAL POINT DESIGNATION	STATION	OFFSET	ELEVATION		COORDINATES FROM LAYOUT LINE OFFSET X	COORDINATES FROM LAYOUT LINE ORDINATE Y	BENT LINE LENGTH FROM Y-AXIS or OFFSET FROM EXTERIOR GIRDER	GIRDER LINE LENGTH
F NING 1	722+68.5739	-22.2500	5239.1074		-22.2500	-15.5861	-23.2043	-9.0000
T 1	722+77.9739	-22.2500	5239.9987		-22.2500	-6.5861	-23.2043	0.0000
OT 1	722+79.9839	-22.2500	5238.9754		-22.2500	-4.5761	-23.2043	2.0100
F-1	722+32.1323	-22.2500	5238.9511		-22.2500	-2.4277		4.1583
F-2	722+84.2806	-22.2500	5239.9274		-22.2500	-.2794		6.3066
F-3	722+86.4289	-22.2500	5238.9044		-22.2500	1.8689		8.4550
F-4	722+88.5772	-22.2500	5238.8821		-22.2500	4.0172		10.6033
F-5	722+90.7256	-22.2500	5238.8604		-22.2500	6.1656		12.7516
F-6	722+92.8739	-22.2500	5238.8394		-22.2500	8.3139		14.8999
F-7	722+95.0222	-22.2500	5238.8190		-22.2500	10.4622		17.0483
F-8	722+97.1705	-22.2500	5238.7993		-22.2500	12.6105		19.1966
F-9	722+99.3189	-22.2500	5238.7802		-22.2500	14.7589		21.3449
F-10	723+01.4672	-22.2500	5238.7618		-22.2500	16.9072		23.4932
F-11	723+03.6155	-22.2500	5238.7441		-22.2500	19.0555		25.6416
F-12	723+05.7638	-22.2500	5238.7270		-22.2500	21.2038		27.7899
F-13	723+07.9122	-22.2500	5238.7106		-22.2500	23.3522		29.9382
F-14	723+10.0605	-22.2500	5238.6948		-22.2500	25.5005		32.0865
F-15	723+12.2088	-22.2500	5238.6797		-22.2500	27.6488		34.2349
F-16	723+14.3571	-22.2500	5238.6653		-22.2500	29.7971		36.3832
F-17	723+16.5055	-22.2500	5238.6515		-22.2500	31.9455		38.5315
F-18	723+18.6538	-22.2500	5238.6383		-22.2500	34.0938		40.6798
F-19	723+20.8021	-22.2500	5238.6258		-22.2500	36.2421		42.8282
CL PIER 2	723+22.9504	-22.2500	5238.6140		-22.2500	38.3904	-23.2043	44.9765
CL PIER 2	723+22.9504	-22.2500	5238.6140		-22.2500	38.3904	-23.2043	44.9765
F-1	723+25.6360	-22.2500	5238.6002		-22.2500	41.0760		47.6621
F-2	723+28.3216	-22.2500	5238.5867		-22.2500	43.7616		50.3476
F-3	723+31.0072	-22.2500	5238.5733		-22.2500	46.4472		53.0332
F-4	723+33.6927	-22.2500	5238.5599		-22.2500	49.1327		55.7188
F-5	723+36.3783	-22.2500	5238.5464		-22.2500	51.8183		58.4044
F-6	723+39.0639	-22.2500	5238.5330		-22.2500	54.5039		61.0899
F-7	723+41.7495	-22.2500	5238.5196		-22.2500	57.1895		63.7755
F-8	723+44.4350	-22.2500	5238.5062		-22.2500	59.8750		66.4611
F-9	723+47.1206	-22.2500	5238.4927		-22.2500	62.5606		69.1467
F-10	723+49.8062	-22.2500	5238.4793		-22.2500	65.2462		71.8322
F-11	723+52.4918	-22.2500	5238.4659		-22.2500	67.9318		74.5178
F-12	723+55.1773	-22.2500	5238.4524		-22.2500	70.6173		77.2034
F-13	723+57.8629	-22.2500	5238.4390		-22.2500	73.3029		79.8890
F-14	723+60.5485	-22.2500	5238.4256		-22.2500	75.9885		82.5745
F-15	723+63.2341	-22.2500	5238.4122		-22.2500	78.6741		85.2601
F-16	723+65.9196	-22.2500	5238.3987		-22.2500	81.3596		87.9457
F-17	723+68.6052	-22.2500	5238.3853		-22.2500	84.0452		90.6313
F-18	723+71.2908	-22.2500	5238.3719		-22.2500	86.7308		93.3168
F-19	723+73.9764	-22.2500	5238.3585		-22.2500	89.4164		96.0024
ER 3	723+76.6619	-22.2500	5238.3450		-22.2500	92.1019	-23.2043	98.6880
ER 3	723+76.6619	-22.2500	5238.3450		-22.2500	92.1019	-23.2043	98.6880
F-1	723+78.8103	-22.2500	5238.3343		-22.2500	94.2503		100.8363
F-2	723+80.9586	-22.2500	5238.3235		-22.2500	96.3986		102.9846
F-3	723+83.1069	-22.2500	5238.3128		-22.2500	98.5469		105.1330
F-4	723+85.2552	-22.2500	5238.3021		-22.2500	100.6952		107.2813
F-5	723+87.4036	-22.2500	5238.2913		-22.2500	102.8436		109.4296
F-6	723+89.5519	-22.2500	5238.2806		-22.2500	104.9919		111.5779
F-7	723+91.7002	-22.2500	5238.2698		-22.2500	107.1402		113.7263
F-8	723+93.8485	-22.2500	5238.2591		-22.2500	109.2885		115.8746
F-9	723+95.9969	-22.2500	5238.2483		-22.2500	111.4369		118.0229
F-10	723+98.1452	-22.2500	5238.2376		-22.2500	113.5852		120.1712
F-11	724+00.2935	-22.2500	5238.2269		-22.2500	115.7335		122.3196
F-12	724+02.4418	-22.2500	5238.2159		-22.2500	117.8818		124.4679
F-13	724+04.5902	-22.2500	5238.2045		-22.2500	120.0302		126.6162
F-14	724+06.7385	-22.2500	5238.1928		-22.2500	122.1785		128.7645
F-15	724+08.8868	-22.2500	5238.1807		-22.2500	124.3268		130.9129
F-16	724+11.0351	-22.2500	5238.1682		-22.2500	126.4751		133.0612
F-17	724+13.1835	-22.2500	5238.1553		-22.2500	128.6235		135.2095
F-18	724+15.3318	-22.2500	5238.1421		-22.2500	130.7718		137.3578
F-19	724+17.4801	-22.2500	5238.1284		-22.2500	132.9201		139.5062
CL ABUT 4	724+19.6284	-22.2500	5238.1144		-22.2500	135.0684	-23.2043	141.6545
BF ABUT 4	724+21.6384	-22.2500	5238.1010		-22.2500	137.0784	-23.2043	143.6645
END WING 4	724+30.6384	-22.2500	5238.0367		-22.2500	146.0784	-23.2043	152.6645

LONGITUDINAL LINE: CL GIRDER C

BENT LINE DESCRIPTION OR FRACTIONAL POINT DESIGNATION	STATION	OFFSET	ELEVATION		COORDINATES FROM LAYOUT LINE OFFSET X	COORDINATES FROM LAYOUT LINE ORDINATE Y	BENT LINE LENGTH FROM Y-AXIS or OFFSET FROM EXTERIOR GIRDER	GIRDER LINE LENGTH
END WING 1	722+71.4160	-14.0000	5238.8362		-14.0000	-13.1440	-14.6004	-9.0000
BF ABUT 1	722+80.4160	-14.0000	5238.7520		-14.0000	-4.1440	-14.6004	0.0000
CL ABUT 1	722+82.4260	-14.0000	5238.7340		-14.0000	-2.1340	-14.6004	2.0100
F-1	722+84.5743	-14.0000	5238.7152		-14.0000	.0143		4.1583
F-2	722+86.7226	-14.0000	5238.6968		-14.0000	2.1626		6.3066
F-3	722+88.8709	-14.0000	5238.6788		-14.0000	4.3109		8.4550
F-4	722+91.0193	-14.0000	5238.6613		-14.0000	6.4593		10.6033
F-5	722+93.1676	-14.0000	5238.6441		-14.0000	8.6076		12.7516
F-6	722+95.3159	-14.0000	5238.6274		-14.0000	10.7559		14.8999
F-7	722+97.4642	-14.0000	5238.6110		-14.0000	12.9042		17.0483
F-8	722+99.6126	-14.0000	5238.5951		-14.0000	15.0526		19.1966
F-9	723+01.7609	-14.0000	5238.5796		-14.0000	17.2009		21.3449
F-10	723+03.9092	-14.0000	5238.5645		-14.0000	19.3492		23.4932
F-11	723+06.0575	-14.0000	5238.5498		-14.0000	21.4975		25.6416
F-12	723+08.2059	-14.0000	5238.5356		-14.0000	23.6459		27.7899
F-13	723+10.3542	-14.0000	5238.5217		-14.0000	25.7942		29.9382
F-14	723+12.5025	-14.0000	5238.5083		-14.0000	27.9425		32.0865
F-15	723+14.6508	-14.0000	5238.4953		-14.0000	30.0908		34.2349
F-16	723+16.7992	-14.0000	5238.4827		-14.0000	32.2392		36.3832
F-17	723+18.9475	-14.0000	5238.4705		-14.0000	34.3875		38.5315
F-18	723+21.0958	-14.0000	5238.4587		-14.0000	36.5358		40.6798
F-19	723+23.2441	-14.0000	5238.4473		-14.0000	38.6841		42.8282
CL PIER 2	723+25.3925	-14.0000	5238.4364		-14.0000	40.8325	-14.6004	44.9765
CL PIER 2	723+25.3925	-14.0000	5238.4364		-14.0000	40.8325	-14.6004	44.9765
F-1	723+28.0780	-14.0000	5238.4229		-14.0000	43.5180		47.6621
F-2	723+30.7636	-14.0000	5238.4095		-14.0000	46.2036		50.3476
F-3	723+33.4492	-14.0000	5238.3961		-14.0000	48.8892		53.0332
F-4	723+36.1348	-14.0000	5238.3827		-14.0000	51.5748		55.7188
F-5	723+38.8203	-14.0000	5238.3692		-14.0000	54.2603		58.4044
F-6	723+41.5059	-14.0000	5238.3558		-14.0000	56.9459		61.0899
F-7	723+44.1915	-14.0000	5238.3424		-14.0000	59.6315		63.7755
F-8	723+46.8771	-14.0000	5238.3289		-14.0000	62.3171		66.4611
F-9	723+49.5626	-14.0000	5238.3155		-14.0000	65.0026		69.1467
F-10	723+52.2482	-14.0000	5238.3021		-14.0000	67.6882		71.8322
F-11	723+54.9338	-14.0000	5238.2887		-14.0000	70.3738		74.5178
F-12	723+57.6194	-14.0000	5238.2752		-14.0000	73.0594		77.2034
F-13	723+60.3049	-14.0000	5238.2618		-14.0000	75.7449		79.8890
F-14	723+62.9905	-14.0000	5238.2484		-14.0000	78.4305		82.5745
F-15	723+65.6761	-14.0000	5238.2350		-14.0000	81.1161		85.2601
F-16	723+68.3617	-14.0000	5238.2215		-14.0000	83.8017		87.9457
F-17	723+71.0472	-14.0000	5238.2081		-14.0000	86.4872		90.6313
F-18	723+73.7328	-14.0000	5238.1947		-14.0000	89.1728		93.3168
F-19	723+76.4184	-14.0000	5238.1812		-14.0000	91.8584		96.0024
CL PIER 3	723+79.1040	-14.0000	5238.1678		-14.0000	94.5440	-14.6004	98.6880
CL PIER 3	723+79.1040	-14.0000	5238.1678		-14.0000	94.5440	-14.6004	98.6880
F-1	723+81.2523	-14.0000	5238.1571		-14.0000	96.6923		100.8363
F-2	723+83.4006	-14.0000	5238.1463		-14.0000	98.8406		102.9846
F-3	723+85.5489	-14.0000	5238.1356		-14.0000	100.9889		105.1330
F-4	723+87.6973	-14.0000	5238.1248		-14.0000	103.1373		107.2813
F-5	723+89.8456	-14.0000	5238.1141		-14.0000	105.2856		109.4296
F-6	723+91.9939	-14.0000	5238.1034		-14.0000	107.4339		111.5779
F-7	723+94.1422	-14.0000	5238.0926		-14.0000	109.5822		113.7263
F-8	723+96.2906	-14.0000	5238.0819		-14.0000	111.7306		115.8746
F-9	723+98.4389	-14.0000	5238.0711		-14.0000	113.8789		118.0229
F-10	724+00.5872	-14.0000	5238.0604		-14.0000	116.0272		120.1712
F-11	724+02.7355	-14.0000	5238.0493		-14.0000	118.1755		122.3196
F-12	724+04.8839	-14.0000	5238.0379		-14.0000	120.3239		124.4679
F-13	724+07.0322	-14.0000	5238.0261		-14.0000	122.4722		126.6162
F-14	724+09.1805	-14.0000	5238.0140		-14.0000	124.6205		128.7645
F-15	724+11.3288	-14.0000	5238.0014		-14.0000	126.7688		130.9129
F-16	724+13.4772	-14.0000	5237.9885		-14.0000	128.9172		133.0612
F-17	724+15.6255	-14.0000	5237.9752		-14.0000	131.0655		135.2095
F-18	724+17.7738	-14.0000	5237.9615		-14.0000	133.2138		137.3578
F-19	724+19.9221	-14.0000	5237.9475		-14.0000	135.3621		139.5062
CL ABUT 4	724+22.0705	-14.0000	5237.9331		-14.0000	137.5105	-14.6004	141.6545
BF ABUT 4	724+24.0805	-14.0000	5237.9192		-14.0000	139.5205	-14.6004	143.6645
END WING 4	724+33.0805	-14.0000	5237.8532		-14.0000	148.5205	-14.6004	152.6645

LONGITUDINAL LINE: CL GIRDER D

BENT LINE DESCRIPTION OR FRACTIONAL POINT DESIGNATION	STATION	OFFSET	ELEVATION		COORDINATES FROM LAYOUT LINE OFFSET X	COORDINATES FROM LAYOUT LINE ORDINATE Y	BENT LINE LENGTH FROM Y-AXIS or OFFSET FROM EXTERIOR GIRDER	GIRDER LINE LENGTH
END WING 1	722+73.8580	-5.7500	5238.5779		-5.7500	-10.7020	-5.9966	-9.0000
BF ABUT 1	722+82.8580	-5.7500	5238.5174		-5.7500	-1.7020	-5.9966	0.0000
CL ABUT 1	722+84.8680	-5.7500	5238.5043		-5.7500	.3080	-5.9966	2.0100
F-1	722+87.0163	-5.7500	5238.4904		-5.7500	2.4563		4.1583
F-2	722+89.1646	-5.7500	5238.4767		-5.7500	4.6046		6.3066
F-3	722+91.3130	-5.7500	5238.4632		-5.7500	6.7530		8.4550
F-4	722+93.4613	-5.7500	5238.4498		-5.7500	8.9013		10.6033
F-5	722+95.6096	-5.7500	5238.4366		-5.7500	11.0496		12.7516
F-6	722+97.7579	-5.7500	5238.4236		-5.7500	13.1979		14.8999
F-7	722+99.9063	-5.7500	5238.4108		-5.7500	15.3463		17.0483
F-8	723+02.0546	-5.7500	5238.3981		-5.7500	17.4946		19.1966
F-9	723+04.2029	-5.7500	5238.3856		-5.7500	19.6429		21.3449
F-10	723+06.3512	-5.7500	5238.3733		-5.7500	21.7912		23.4932
F-11	723+08.4996	-5.7500	5238.3611		-5.7500	23.9396		25.6416
F-12	723+10.6479	-5.7500	5238.3491		-5.7500	26.0879		27.7899
F-13	723+12.7962	-5.7500	5238.3373		-5.7500	28.2362		29.9382
F-14	723+14.9445	-5.7500	5238.3256		-5.7500	30.3845		32.0865
F-15	723+17.0929	-5.7500	5238.3141		-5.7500	32.5329		34.2349
F-16	723+19.2412	-5.7500	5238.3028		-5.7500	34.6812		36.3832
F-17	723+21.3895	-5.7500	5238.2917		-5.7500	36.8295		38.5315
F-18	723+23.5378	-5.7500	5238.2807		-5.7500	38.9778		40.6798
F-19	723+25.6862	-5.7500	5238.2699		-5.7500	41.1262		42.8282
CL PIER 2	723+27.8345	-5.7500	5238.2592		-5.7500	43.2745	-5.9966	44.9765
CL PIER 2	723+27.8345	-5.7500	5238.2592		-5.7500	43.2745	-5.9966	44.9765
F-1	723+30.5201	-5.7500	5238.2457		-5.7500	45.9601		47.6621
F-2	723+33.2056	-5.7500	5238.2323		-5.7500	48.6456		50.3476
F-3	723+35.8912	-5.7500	5238.2189		-5.7500	51.3312		53.0332
F-4	723+38.5768	-5.7500	5238.2054		-5.7500	54.0168		55.7188
F-5	723+41.2624	-5.7500	5238.1920		-5.7500	56.7024		58.4044
F-6	723+43.9479	-5.7500	5238.1786		-5.7500	59.3879		61.0899
F-7	723+46.6335	-5.7500	5238.1652		-5.7500	62.0735		63.7755
F-8	723+49.3191	-5.7500	5238.1517		-5.7500	64.7591		66.4611
F-9	723+52.0047	-5.7500	5238.1383		-5.7500	67.4447		69.1467
F-10	723+54.6902	-5.7500	5238.1249		-5.7500	70.1302		71.8322
F-11	723+57.3758	-5.7500	5238.1115		-5.7500	72.8158		74.5178
F-12	723+60.0614	-5.7500	5238.0980		-5.7500	75.5014		77.2034
F-13	723+62.7470	-5.7500	5238.0846		-5.7500	78.1870		79.8890
F-14	723+65.4325	-5.7500	5238.0712		-5.7500	80.8725		82.5745
F-15	723+68.1181	-5.7500	5238.0577		-5.7500	83.5581		85.2601
F-16	723+70.8037	-5.7500	5238.0443		-5.7500	86.2437		87.9457
F-17	723+73.4893	-5.7500	5238.0309		-5.7500	88.9293		90.6313
F-18	723+76.1748	-5.7500	5238.0175		-5.7500	91.6148		93.3168
F-19	723+78.8604	-5.7500	5238.0040		-5.7500	94.3004		96.0024
CL PIER 3	723+81.5460	-5.7500	5237.9906		-5.7500	96.9860	-5.9966	98.6880
CL PIER 3	723+81.5460	-5.7500	5237.9906		-5.7500	96.9860	-5.9966	98.6880
F-1	723+83.6943	-5.7500	5237.9799		-5.7500	99.1343		100.8363
F-2	723+85.8426	-5.7500	5237.9691		-5.7500	101.2826		102.9846
F-3	723+87.9910	-5.7500	5237.9584		-5.7500	103.4310		105.1330
F-4	723+90.1393	-5.7500	5237.9476		-5.7500	105.5793		107.2813
F-5	723+92.2876	-5.7500	5237.9369		-5.7500	107.7276		109.4296
F-6	723+94.4359	-5.7500	5237.9262		-5.7500	109.8759		111.5779
F-7	723+96.5843	-5.7500	5237.9154		-5.7500	112.0243		113.7263
F-8	723+98.7326	-5.7500	5237.9047		-5.7500	114.1726		115.8746
F-9	724+00.8809	-5.7500	5237.8939		-5.7500	116.3209		113.0229
F-10	724+03.0292	-5.7500	5237.8828		-5.7500	118.4692		120.1712
F-11	724+05.1776	-5.7500	5237.8713		-5.7500	120.6176		122.3196
F-12	724+07.3259	-5.7500	5237.8595		-5.7500	122.7659		124.4679
F-13	724+09.4742	-5.7500	5237.8473		-5.7500	124.9142		126.6162
F-14	724+11.6225	-5.7500	5237.8347		-5.7500	127.0625		128.7645
F-15	724+13.7709	-5.7500	5237.8217		-5.7500	129.2109		130.9129
F-16	724+15.9192	-5.7500	5237.8084		-5.7500	131.3592		133.0612
F-17	724+18.0675	-5.7500	5237.7946		-5.7500	133.5075		135.2095
F-18	724+20.2158	-5.7500	5237.7805		-5.7500	135.6558		137.3578
F-19	724+22.3642	-5.7500	5237.7660		-5.7500	137.8042		139.5062
CL ABUT 4	724+24.5125	-5.7500	5237.7512		-5.7500	139.9525	-5.9966	141.6545
BF ABUT 4	724+26.5225	-5.7500	5237.7369		-5.7500	141.9625	-5.9966	143.6645
END WING 4	724+35.5225	-5.7500	5237.6691		-5.7500	150.9625	-5.9966	152.6645

NOTE: ELEVATIONS ARE AT TOP OF CONCRETE DECK .1667 FEET BELOW FINISHED GRADE.

BRIDGE STANDARD 3

REVISIONS

DIVISION OF HIGHWAYS

I-25 & 6 AVE. INTERCHANGE - RAMP 'F' OVER B.N.R.R.

BRIDGE DECK ELEVATIONS

Designer J. Cornejo | Structure Number F-16-EG

Detailer J. McHenry

Drawing Number B-17 of 20 Drawings

FEDERAL ROAD REGION NO.	DIVISION	PROJ. NO.	SHEET NO.	TOTAL SHEETS
VIII	COLORADO	IR25-2(187)	159	170/77

AS CONSTRUCTED

NO REVISIONS 7/30/87 REVISED ____ VOID ____

LONGITUDINAL LINE: HCL RAMP F

BENT LINE DESCRIPTION OR FRACTIONAL POINT DESIGNATION	STATION	OFFSET	ELEVATION		COORDINATES FROM LAYOUT LINE OFFSET X	COORDINATES FROM LAYOUT LINE ORDINATE Y	BENT LINE LENGTH FROM Y-AXIS or OFFSET FROM EXTERIOR GIRDER	GIRDER LINE LENGTH
END WING 1	722+75.5600	0.0000	5238.4055		.0000	-9.0000	0.0000	-9.0000
BUT 1	722+84.5600	0.0000	5238.3605		0.0000	0.0000	.0000	0.0000
BUT 1	722+86.5700	0.0000	5238.3505		.0000	2.0100	0.0000	2.0100
F-1	722+88.7183	0.0000	5238.3397		.0000	4.1583		4.1583
F-2	722+90.8666	0.0000	5238.3290		.0000	6.3066		6.3066
F-3	722+93.0150	0.0000	5238.3183		.0000	8.4550		8.4550
F-4	722+95.1633	0.0000	5238.3075		0.0000	10.6033		10.6033
F-5	722+97.3116	0.0000	5238.2968		0.0000	12.7516		12.7516
F-6	722+99.4599	0.0000	5238.2860		0.0000	14.8999		14.8999
F-7	723+01.6083	0.0000	5238.2753		.0000	17.0483		17.0483
F-8	723+03.7566	0.0000	5238.2646		.0000	19.1966		19.1966
F-9	723+05.9049	0.0000	5238.2538		.0000	21.3449		21.3449
F-10	723+08.0532	0.0000	5238.2431		.0000	23.4932		23.4932
F-11	723+10.2016	0.0000	5238.2323		.0000	25.6416		25.6416
F-12	723+12.3499	0.0000	5238.2216		.0000	27.7899		27.7899
F-13	723+14.4982	0.0000	5238.2108		0.0000	29.9382		29.9382
F-14	723+16.6465	0.0000	5238.2001		0.0000	32.0865		32.0865
F-15	723+18.7949	0.0000	5238.1894		0.0000	34.2349		34.2349
F-16	723+20.9432	0.0000	5238.1786		.0000	36.3832		36.3832
F-17	723+23.0915	0.0000	5238.1679		.0000	38.5315		38.5315
F-18	723+25.2398	0.0000	5238.1571		.0000	40.6798		40.6798
F-19	723+27.3882	0.0000	5238.1464		.0000	42.8282		42.8282
CL PIER 2	723+29.5365	0.0000	5238.1357		.0000	44.9765	0.0000	44.9765
CL PIER 2	723+29.5365	0.0000	5238.1357		.0000	44.9765	0.0000	44.9765
F-1	723+32.2221	0.0000	5238.1222		.0000	47.6621		47.6621
F-2	723+34.9076	0.0000	5238.1088		.0000	50.3476		50.3476
F-3	723+37.5932	0.0000	5238.0954		.0000	53.0332		53.0332
F-4	723+40.2788	0.0000	5238.0819		.0000	55.7188		55.7188
F-5	723+42.9644	0.0000	5238.0685		.0000	58.4044		58.4044
F-6	723+45.6499	0.0000	5238.0551		.0000	61.0899		61.0899
F-7	723+48.3355	0.0000	5238.0417		.0000	63.7755		63.7755
F-8	723+51.0211	0.0000	5238.0282		.0000	66.4611		66.4611
F-9	723+53.7067	0.0000	5238.0148		.0000	69.1467		69.1467
F-10	723+56.3922	0.0000	5238.0014		.0000	71.8322		71.8322
F-11	723+59.0778	0.0000	5237.9879		.0000	74.5178		74.5178
F-12	723+61.7634	0.0000	5237.9745		.0000	77.2034		77.2034
F-13	723+64.4490	0.0000	5237.9611		0.0000	79.8890		79.8890
F-14	723+67.1345	0.0000	5237.9477		.0000	82.5745		82.5745
F-15	723+69.8201	0.0000	5237.9342		.0000	85.2601		85.2601
F-16	723+72.5057	0.0000	5237.9208		.0000	87.9457		87.9457
F-17	723+75.1913	0.0000	5237.9074		.0000	90.6313		90.6313
F-18	723+77.8768	0.0000	5237.8939		.0000	93.3168		93.3168
F-19	723+80.5624	0.0000	5237.8805		0.0000	96.0024		96.0024
CL PIER 3	723+83.2480	0.0000	5237.8671		.0000	98.6880	0.0000	98.6880
PIER 3	723+83.2480	0.0000	5237.8671		.0000	98.6880	0.0000	98.6880
F-1	723+85.3963	0.0000	5237.8564		0.0000	100.8363		100.8363
F-2	723+87.5446	0.0000	5237.8456		0.0000	102.9846		102.9846
F-3	723+89.6930	0.0000	5237.8349		.0000	105.1330		105.1330
F-4	723+91.8413	0.0000	5237.8241		.0000	107.2813		107.2813
F-5	723+93.9896	0.0000	5237.8134		.0000	109.4296		109.4296
F-6	723+96.1379	0.0000	5237.8026		.0000	111.5779		111.5779
F-7	723+98.2863	0.0000	5237.7919		.0000	113.7263		113.7263
F-8	724+00.4346	0.0000	5237.7812		.0000	115.8746		115.8746
F-9	724+02.5829	0.0000	5237.7701		.0000	118.0229		118.0229
F-10	724+04.7312	0.0000	5237.7588		.0000	120.1712		120.1712
F-11	724+06.8796	0.0000	5237.7470		.0000	122.3196		122.3196
F-12	724+09.0279	0.0000	5237.7349		.0000	124.4679		124.4679
F-13	724+11.1762	0.0000	5237.7223		.0000	126.6162		126.6162
F-14	724+13.3245	0.0000	5237.7094		.0000	128.7645		128.7645
F-15	724+15.4729	0.0000	5237.6962		.0000	130.9129		130.9129
F-16	724+17.6212	0.0000	5237.6825		.0000	133.0612		133.0612
F-17	724+19.7695	0.0000	5237.6685		.0000	135.2095		135.2095
F-18	724+21.9178	0.0000	5237.6541		.0000	137.3578		137.3578
F-19	724+24.0662	0.0000	5237.6393		.0000	139.5062		139.5062
CL ABUT 4	724+26.2145	0.0000	5237.6241		.0000	141.6545	0.0000	141.6545
BF ABUT 4	724+28.2245	0.0000	5237.6096		0.0000	143.6645	0.0000	143.6645
END WING 4	724+37.2245	0.0000	5237.5485		.0000	152.6645	0.0000	152.6645

LONGITUDINAL LINE: CL GIRDER E

BENT LINE DESCRIPTION OR FRACTIONAL POINT DESIGNATION	STATION	OFFSET	ELEVATION		COORDINATES FROM LAYOUT LINE OFFSET X	COORDINATES FROM LAYOUT LINE ORDINATE Y	BENT LINE LENGTH FROM Y-AXIS or OFFSET FROM EXTERIOR GIRDER	GIRDER LINE LENGTH
END WING 1	722+76.3000	2.5000	5238.3325		2.5000	-8.2600	2.6072	-9.0000
BF ABUT 1	722+85.3000	2.5000	5238.2940		2.5000	.7400	2.6072	0.0000
CL ABUT 1	722+87.3100	2.5000	5238.2852		2.5000	2.7500	2.6072	2.0100
F-1	722+89.4583	2.5000	5238.2757		2.5000	4.8983		4.1583
F-2	722+91.6067	2.5000	5238.2662		2.5000	7.0467		6.3066
F-3	722+93.7550	2.5000	5238.2565		2.5000	9.1950		8.4550
F-4	722+95.9033	2.5000	5238.2465		2.5000	11.3433		10.6033
F-5	722+98.0516	2.5000	5238.2371		2.5000	13.4916		12.7516
F-6	723+00.2000	2.5000	5238.2272		2.5000	15.6400		14.8999
F-7	723+02.3483	2.5000	5238.2173		2.5000	17.7883		17.0483
F-8	723+04.4966	2.5000	5238.2073		2.5000	19.9366		19.1966
F-9	723+06.6449	2.5000	5238.1973		2.5000	22.0849		21.3449
F-10	723+08.7933	2.5000	5238.1872		2.5000	24.2333		23.4932
F-11	723+10.9416	2.5000	5238.1769		2.5000	26.3816		25.6416
F-12	723+13.0899	2.5000	5238.1667		2.5000	28.5299		27.7899
F-13	723+15.2382	2.5000	5238.1563		2.5000	30.6782		29.9382
F-14	723+17.3866	2.5000	5238.1459		2.5000	32.8266		32.0865
F-15	723+19.5349	2.5000	5238.1354		2.5000	34.9749		34.2349
F-16	723+21.6832	2.5000	5238.1248		2.5000	37.1232		36.3832
F-17	723+23.8315	2.5000	5238.1142		2.5000	39.2715		38.5315
F-18	723+25.9799	2.5000	5238.1034		2.5000	41.4199		40.6798
F-19	723+28.1282	2.5000	5238.0927		2.5000	43.5682		42.8282
CL PIER 2	723+30.2765	2.5000	5238.0820		2.5000	45.7165	2.6072	44.9765
CL PIER 2	723+30.2765	2.5000	5238.0820		2.5000	45.7165	2.6072	44.9765
F-1	723+32.9621	2.5000	5238.0685		2.5000	48.4021		47.6621
F-2	723+35.6477	2.5000	5238.0551		2.5000	51.0877		50.3476
F-3	723+38.3332	2.5000	5238.0417		2.5000	53.7732		53.0332
F-4	723+41.0188	2.5000	5238.0282		2.5000	56.4588		55.7188
F-5	723+43.7044	2.5000	5238.0148		2.5000	59.1444		58.4044
F-6	723+46.3900	2.5000	5238.0014		2.5000	61.8300		61.0899
F-7	723+49.0755	2.5000	5237.9880		2.5000	64.5155		63.7755
F-8	723+51.7611	2.5000	5237.9745		2.5000	67.2011		66.4611
F-9	723+54.4467	2.5000	5237.9611		2.5000	69.8867		69.1467
F-10	723+57.1323	2.5000	5237.9477		2.5000	72.5723		71.8322
F-11	723+59.8178	2.5000	5237.9342		2.5000	75.2576		74.5178
F-12	723+62.5034	2.5000	5237.9208		2.5000	77.9434		77.2034
F-13	723+65.1890	2.5000	5237.9074		2.5000	80.6290		79.8890
F-14	723+67.8746	2.5000	5237.8940		2.5000	83.3146		82.5745
F-15	723+70.5601	2.5000	5237.8805		2.5000	86.0001		85.2601
F-16	723+73.2457	2.5000	5237.8671		2.5000	88.6857		87.9457
F-17	723+75.9313	2.5000	5237.8537		2.5000	91.3713		90.6313
F-18	723+78.6169	2.5000	5237.8402		2.5000	94.0569		93.3168
F-19	723+81.3024	2.5000	5237.8268		2.5000	96.7424		96.0024
CL PIER 3	723+83.9880	2.5000	5237.8134		2.5000	99.4280	2.6072	98.6880
CL PIER 3	723+83.9880	2.5000	5237.8134		2.5000	99.4280	2.6072	98.6880
F-1	723+86.1363	2.5000	5237.8027		2.5000	101.5763		100.8363
F-2	723+88.2847	2.5000	5237.7919		2.5000	103.7247		102.9846
F-3	723+90.4330	2.5000	5237.7812		2.5000	105.8730		105.1330
F-4	723+92.5813	2.5000	5237.7704		2.5000	108.0213		107.2813
F-5	723+94.7296	2.5000	5237.7597		2.5000	110.1696		109.4296
F-6	723+96.8780	2.5000	5237.7489		2.5000	112.3180		111.5779
F-7	723+99.0263	2.5000	5237.7382		2.5000	114.4663		113.7263
F-8	724+01.1746	2.5000	5237.7274		2.5000	116.6146		115.8746
F-9	724+03.3229	2.5000	5237.7163		2.5000	118.7629		118.0229
F-10	724+05.4713	2.5000	5237.7046		2.5000	120.9113		120.1712
F-11	724+07.6196	2.5000	5237.6929		2.5000	123.0596		122.3196
F-12	724+09.7679	2.5000	5237.6806		2.5000	125.2079		124.4679
F-13	724+11.9162	2.5000	5237.6679		2.5000	127.3562		126.6162
F-14	724+14.0646	2.5000	5237.6545		2.5000	129.5046		128.7645
F-15	724+16.2129	2.5000	5237.6415		2.5000	131.6529		130.9129
F-16	724+18.3612	2.5000	5237.6277		2.5000	133.8012		133.0612
F-17	724+20.5095	2.5000	5237.6136		2.5000	135.9495		135.2095
F-18	724+22.6579	2.5000	5237.5990		2.5000	138.0979		137.3578
F-19	724+24.8062	2.5000	5237.5841		2.5000	140.2462		139.5062
CL ABUT 4	724+26.9545	2.5000	5237.5688		2.5000	142.3945	2.6072	141.6545
BF ABUT 4	724+28.9645	2.5000	5237.5542		2.5000	144.4045	2.6072	143.6645
END WING 4	724+37.9645	2.5000	5237.4845		2.5000	153.4045	2.6072	152.6645

LONGITUDINAL LINE: CL GIRDER F

BENT LINE DESCRIPTION OR FRACTIONAL POINT DESIGNATION	STATION	OFFSET	ELEVATION		COORDINATES FROM LAYOUT LINE OFFSET X	COORDINATES FROM LAYOUT LINE ORDINATE Y	BENT LINE LENGTH FROM Y-AXIS or OFFSET FROM EXTERIOR GIRDER	GIRDER LINE LENGTH
END WING 1	722+78.7420	10.7500	523°.0997		10.7500	-5.6186	11.2111	-9.0000
BF ABUT 1	722+87.7420	10.7500	5238.0808		10.7500	3.1820	11.2111	0.0000
CL ABUT 1	722+89.7520	10.7500	5238.0758		10.7500	5.1920	11.2111	2.0100
F-1	722+91.9004	10.7500	5238.0702		10.7500	7.3404		4.1583
F-2	722+94.0487	10.7500	5238.0642		10.7500	9.4887		6.3066
F-3	722+96.1970	10.7500	5238.0580		10.7500	11.6370		8.4550
F-4	722+98.3453	10.7500	5238.0514		10.7500	13.7853		10.6033
F-5	723+00.4937	10.7500	5238.0445		10.7500	15.9337		12.7516
F-6	723+02.6420	10.7500	5238.0373		10.7500	18.0820		14.8999
F-7	723+04.7903	10.7500	5238.0297		10.7500	20.2303		17.0483
F-8	723+06.9386	10.7500	5238.0219		10.7500	22.3786		19.1966
F-9	723+09.0870	10.7500	5238.0137		10.7500	24.5270		21.3449
F-10	723+11.2353	10.7500	5238.0052		10.7500	26.6753		23.4932
F-11	723+13.3836	10.7500	5237.9964		10.7500	28.8236		25.6416
F-12	723+15.5319	10.7500	5237.9873		10.7500	30.9719		27.7899
F-13	723+17.6803	10.7500	5237.9779		10.7500	33.1203		29.9382
F-14	723+19.8286	10.7500	5237.9681		10.7500	35.2686		32.0865
F-15	723+21.9769	10.7500	5237.9580		10.7500	37.4169		34.2349
F-16	723+24.1252	10.7500	5237.9476		10.7500	39.5652		36.3832
F-17	723+26.2736	10.7500	5237.9370		10.7500	41.7136		38.5315
F-18	723+28.4219	10.7500	5237.9262		10.7500	43.8619		40.6798
F-19	723+30.5702	10.7500	5237.9155		10.7500	46.0102		42.8282
CL PIER 2	723+32.7185	10.7500	5237.9047		10.7500	48.1585	11.2111	44.9765
CL PIER 2	723+32.7185	10.7500	5237.9047		10.7500	48.1585	11.2111	44.9765
F-1	723+35.4041	10.7500	5237.8913		10.7500	50.8441		47.6621
F-2	723+38.0897	10.7500	5237.8779		10.7500	53.5297		50.3476
F-3	723+40.7753	10.7500	5237.8645		10.7500	56.2153		53.0332
F-4	723+43.4608	10.7500	5237.8510		10.7500	58.9008		55.7188
F-5	723+46.1464	10.7500	5237.8376		10.7500	61.5864		58.4044
F-6	723+48.8320	10.7500	5237.8242		10.7500	64.2720		61.0899
F-7	723+51.5176	10.7500	5237.8107		10.7500	66.9576		63.7755
F-8	723+54.2031	10.7500	5237.7973		10.7500	69.6431		66.4611
F-9	723+56.8887	10.7500	5237.7839		10.7500	72.3287		69.1467
F-10	723+59.5743	10.7500	5237.7705		10.7500	75.0143		71.8322
F-11	723+62.2599	10.7500	5237.7570		10.7500	77.6999		74.5178
F-12	723+64.9454	10.7500	5237.7436		10.7500	80.3854		77.2034
F-13	723+67.6310	10.7500	5237.7302		10.7500	83.0710		79.8890
F-14	723+70.3166	10.7500	5237.7168		10.7500	85.7566		82.5745
F-15	723+73.0022	10.7500	5237.7033		10.7500	88.4422		85.2601
F-16	723+75.6877	10.7500	5237.6899		10.7500	91.1277		87.9457
F-17	723+78.3733	10.7500	5237.6765		10.7500	93.8133		90.6313
F-18	723+81.0589	10.7500	5237.6630		10.7500	96.4989		93.3168
F-19	723+83.7445	10.7500	5237.6496		10.7500	99.1845		96.0024
CL PIER 3	723+86.4300	10.7500	5237.6362		10.7500	101.8700	11.2111	98.6880
CL PIER 3	723+86.4300	10.7500	5237.6362		10.7500	101.8700	11.2111	98.6880
F-1	723+88.5784	10.7500	5237.6254		10.7500	104.0184		100.8363
F-2	723+90.7267	10.7500	5237.6147		10.7500	106.1667		102.9846
F-3	723+92.8750	10.7500	5237.6040		10.7500	108.3150		105.1330
F-4	723+95.0233	10.7500	5237.5932		10.7500	110.4633		107.2813
F-5	723+97.1717	10.7500	5237.5825		10.7500	112.6117		109.4296
F-6	723+99.3200	10.7500	5237.5717		10.7500	114.7600		111.5779
F-7	724+01.4683	10.7500	5237.5609		10.7500	116.9083		113.7263
F-8	724+03.6166	10.7500	5237.5497		10.7500	119.0566		115.8746
F-9	724+05.7650	10.7500	5237.5381		10.7500	121.2050		118.0229
F-10	724+07.9133	10.7500	5237.5262		10.7500	123.3533		120.1712
F-11	724+10.0616	10.7500	5237.5139		10.7500	125.5016		122.3196
F-12	724+12.2099	10.7500	5237.5012		10.7500	127.6499		124.4679
F-13	724+14.3583	10.7500	5237.4881		10.7500	129.7983		126.6162
F-14	724+16.5066	10.7500	5237.4747		10.7500	131.9466		128.7645
F-15	724+18.6549	10.7500	5237.4608		10.7500	134.0949		130.9129
F-16	724+20.8032	10.7500	5237.4466		10.7500	136.2432		133.0612
F-17	724+22.9516	10.7500	5237.4320		10.7500	138.3916		135.2095
F-18	724+25.0999	10.7500	5237.4171		10.7500	140.5399		137.3578
F-19	724+27.2482	10.7500	5237.4017		10.7500	142.6882		139.5062
CL ABUT 4	724+29.3965	10.7500	5237.3860		10.7500	144.8365	11.2111	141.6545
BF ABUT 4	724+31.4065	10.7500	5237.3709		10.7500	146.8465	11.2111	143.6645
END WING 4	724+40.4065	10.7500	5237.2995		10.7500	155.8465	11.2111	152.6645

NOTE: ELEVATIONS ARE AT TOP OF CONCRETE DECK .1667 FEET BELOW FINISHED GRADE.

BRIDGE STANDARD 3

REVISIONS		

DIVISION OF HIGHWAYS

I-25 & 6 AVE. INTERCHANGE - RAMP 'F' OVER B.N.R.R.

BRIDGE DECK ELEVATIONS

Designer	J. Cornejo	Structure Numbers	F-16-EG
Detailer	J. McHenry		
Drawing Number B-18		of 20	Drawings

FEDERAL ROAD DIVISION NO.	DIVISION	PROJ. NO.	SHEET NO.	TOTAL SHEETS
VIII	COLORADO	IR25-2(187)	160	170/171

AS CONSTRUCTED

NO REVISIONS 9/30/87 REVISED [ ] VOID [ ]

LONGITUDINAL LINE: CL GIRDER G

BENT LINE DESCRIPTION OR FRACTIONAL POINT DESIGNATION	STATION	OFFSET	ELEVATION		COORDINATES FROM LAYOUT LINE OFFSET X	COORDINATES FROM LAYOUT LINE ORDINATE Y	BENT LINE LENGTH FROM Y-AXIS or OFFSET FROM EXTERIOR GIRDER	GIRDER LINE LENGTH
END WING 1	722+81.1840	19.0000	5237.8784		19.0000	-3.3760	19.8149	-9.0000
BF ABUT 1	722+90.1840	19.0000	5237.8769		19.0000	5.6240	19.8149	0.0000
CL ABUT 1	722+92.1940	19.0000	5237.8752		19.0000	7.6340	19.8149	2.0100
X-1	722+94.3424	19.0000	5237.8729		19.0000	9.7824		4.1583
X-2	722+96.4907	19.0000	5237.8700		19.0000	11.9307		6.3066
X-3	722+98.6390	19.0000	5237.8665		19.0000	14.0790		8.4550
X-4	723+00.7873	19.0000	5237.8625		19.0000	16.2273		10.6033
X-5	723+02.9357	19.0000	5237.8579		19.0000	18.3757		12.7516
X-6	723+05.0840	19.0000	5237.8528		19.0000	20.5240		14.8999
X-7	723+07.2323	19.0000	5237.8471		19.0000	22.6723		17.0483
X-8	723+09.3806	19.0000	5237.8408		19.0000	24.8206		19.1966
X-9	723+11.5290	19.0000	5237.8340		19.0000	26.9690		21.3449
X-10	723+13.6773	19.0000	5237.8266		19.0000	29.1173		23.4932
X-11	723+15.8256	19.0000	5237.8186		19.0000	31.2656		25.6416
X-12	723+17.9739	19.0000	5237.8101		19.0000	33.4139		27.7899
X-13	723+20.1223	19.0000	5237.8010		19.0000	35.5623		29.9382
X-14	723+22.2706	19.0000	5237.7914		19.0000	37.7106		32.0865
X-15	723+24.4189	19.0000	5237.7812		19.0000	39.8589		34.2349
X-16	723+26.5672	19.0000	5237.7705		19.0000	42.0072		36.3832
X-17	723+28.7156	19.0000	5237.7598		19.0000	44.1556		38.5315
X-18	723+30.8639	19.0000	5237.7490		19.0000	46.3039		40.6798
X-19	723+33.0122	19.0000	5237.7383		19.0000	48.4522		42.8282
CL PIER 2	723+35.1605	19.0000	5237.7275		19.0000	50.6005	19.8149	44.9765
CL PIER 2	723+35.1605	19.0000	5237.7275		19.0000	50.6005	19.8149	44.9765
X-1	723+37.8461	19.0000	5237.7141		19.0000	53.2861		47.6621
X-2	723+40.5317	19.0000	5237.7007		19.0000	55.9717		50.3476
X-3	723+43.2173	19.0000	5237.6872		19.0000	58.6573		53.0332
X-4	723+45.9028	19.0000	5237.6738		19.0000	61.3428		55.7188
X-5	723+48.5884	19.0000	5237.6604		19.0000	64.0284		58.4044
X-6	723+51.2740	19.0000	5237.6470		19.0000	66.7140		61.0899
X-7	723+53.9596	19.0000	5237.6335		19.0000	69.3996		63.7755
X-8	723+56.6451	19.0000	5237.6201		19.0000	72.0851		66.4611
X-9	723+59.3307	19.0000	5237.6067		19.0000	74.7707		69.1467
X-10	723+62.0163	19.0000	5237.5933		19.0000	77.4563		71.8322
X-11	723+64.7019	19.0000	5237.5798		19.0000	80.1419		74.5178
X-12	723+67.3874	19.0000	5237.5664		19.0000	82.8274		77.2034
X-13	723+70.0730	19.0000	5237.5530		19.0000	85.5130		79.8890
X-14	723+72.7586	19.0000	5237.5395		19.0000	88.1986		82.5745
X-15	723+75.4442	19.0000	5237.5261		19.0000	90.8842		85.2601
X-16	723+78.1297	19.0000	5237.5127		19.0000	93.5697		87.9457
X-17	723+80.8153	19.0000	5237.4993		19.0000	96.2553		90.6313
X-18	723+83.5009	19.0000	5237.4858		19.0000	98.9409		93.3168
X-19	723+86.1865	19.0000	5237.4724		19.0000	101.6265		96.0024
CL PIER 3	723+88.8720	19.0000	5237.4590		19.0000	104.3120	19.8149	98.6880
CL PIER 3	723+88.8720	19.0000	5237.4590		19.0000	104.3120	19.8149	98.6880
X-1	723+91.0204	19.0000	5237.4482		19.0000	106.4604		100.8363
X-2	723+93.1687	19.0000	5237.4375		19.0000	108.6087		102.9846
X-3	723+95.3170	19.0000	5237.4267		19.0000	110.7570		105.1330
X-4	723+97.4653	19.0000	5237.4160		19.0000	112.9053		107.2813
X-5	723+99.6137	19.0000	5237.4053		19.0000	115.0537		109.4296
X-6	724+01.7620	19.0000	5237.3944		19.0000	117.2020		111.5779
X-7	724+03.9103	19.0000	5237.3832		19.0000	119.3503		113.7263
X-8	724+06.0586	19.0000	5237.3715		19.0000	121.4986		115.8746
X-9	724+08.2070	19.0000	5237.3595		19.0000	123.6470		118.0229
X-10	724+10.3553	19.0000	5237.3472		19.0000	125.7953		120.1712
X-11	724+12.5036	19.0000	5237.3344		19.0000	127.9436		122.3196
X-12	724+14.6519	19.0000	5237.3213		19.0000	130.0919		124.4679
X-13	724+16.8003	19.0000	5237.3078		19.0000	132.2403		126.6162
X-14	724+18.9486	19.0000	5237.2939		19.0000	134.3886		128.7645
X-15	724+21.0969	19.0000	5237.2796		19.0000	136.5369		130.9129
X-16	724+23.2452	19.0000	5237.2650		19.0000	138.6852		133.0612
X-17	724+25.3936	19.0000	5237.2500		19.0000	140.8336		135.2095
X-18	724+27.5419	19.0000	5237.2346		19.0000	142.9819		137.3578
X-19	724+29.6902	19.0000	5237.2188		19.0000	145.1302		139.5062
CL ABUT 4	724+31.8385	19.0000	5237.2027		19.0000	147.2785	19.8149	141.6545
BF ABUT 4	724+33.8485	19.0000	5237.1872		19.0000	149.2885	19.8149	143.6645
END WING 4	724+42.8485	19.0000	5237.1140		19.0000	158.2885	19.8149	152.6645

LONGITUDINAL LINE: RIGHT GUTTERLINE

BENT LINE DESCRIPTION OR FRACTIONAL POINT DESIGNATION	STATION	OFFSET	ELEVATION		COORDINATES FROM LAYOUT LINE OFFSET X	COORDINATES FROM LAYOUT LINE ORDINATE Y	BENT LINE LENGTH FROM Y-AXIS or OFFSET FROM EXTERIOR GIRDER	GIRDER LINE LENGTH
END WING 1	722+81.4801	20.0000	5237.8524		20.0000	-3.0799	20.8578	-9.0000
BF ABUT 1	722+90.4801	20.0000	5237.8526		20.0000	5.9201	20.8578	0.0000
CL ABUT 1	722+92.4901	20.0000	5237.8515		20.0000	7.9301	20.8578	2.0100
X-1	722+94.3424	20.0000	5237.8498		20.0000	9.7824	1.0000	3.8623
X-2	722+96.4907	20.0000	5237.8473		20.0000	11.9307	1.0000	6.0106
X-3	722+98.6390	20.0000	5237.8442		20.0000	14.0790	1.0000	8.1590
X-4	723+00.7873	20.0000	5237.8406		20.0000	16.2273	1.0000	10.3073
X-5	723+02.9357	20.0000	5237.8363		20.0000	18.3757	1.0000	12.4556
X-6	723+05.0840	20.0000	5237.8314		20.0000	20.5240	1.0000	14.6039
X-7	723+07.2323	20.0000	5237.8260		20.0000	22.6723	1.0000	16.7523
X-8	723+09.3806	20.0000	5237.8200		20.0000	24.8206	1.0000	18.9006
X-9	723+11.5290	20.0000	5237.8133		20.0000	26.9690	1.0000	21.0489
X-10	723+13.6773	20.0000	5237.8061		20.0000	29.1173	1.0000	23.1972
X-11	723+15.8256	20.0000	5237.7983		20.0000	31.2656	1.0000	25.3456
X-12	723+17.9739	20.0000	5237.7899		20.0000	33.4139	1.0000	27.4939
X-13	723+20.1223	20.0000	5237.7809		20.0000	35.5623	1.0000	29.6422
X-14	723+22.2706	20.0000	5237.7713		20.0000	37.7106	1.0000	31.7905
X-15	723+24.4189	20.0000	5237.7612		20.0000	39.8589	1.0000	33.9389
X-16	723+26.5672	20.0000	5237.7505		20.0000	42.0072	1.0000	36.0872
X-17	723+28.7156	20.0000	5237.7398		20.0000	44.1556	1.0000	38.2355
X-18	723+30.8639	20.0000	5237.7290		20.0000	46.3039	1.0000	40.3838
X-19	723+33.0122	20.0000	5237.7183		20.0000	48.4522	1.0000	42.5322
CL PIER 2	723+35.4566	20.0000	5237.7061		20.0000	50.8966	20.8578	44.9765
CL PIER 2	723+35.4566	20.0000	5237.7061		20.0000	50.8966	20.8578	44.9765
X-1	723+37.8461	20.0000	5237.6941		20.0000	53.2861	1.0000	47.3661
X-2	723+40.5317	20.0000	5237.6807		20.0000	55.9717	1.0000	50.0516
X-3	723+43.2173	20.0000	5237.6672		20.0000	58.6573	1.0000	52.7372
X-4	723+45.9028	20.0000	5237.6538		20.0000	61.3428	1.0000	55.4228
X-5	723+48.5884	20.0000	5237.6404		20.0000	64.0284	1.0000	58.1084
X-6	723+51.2740	20.0000	5237.6270		20.0000	66.7140	1.0000	60.7939
X-7	723+53.9596	20.0000	5237.6135		20.0000	69.3996	1.0000	63.4795
X-8	723+56.6451	20.0000	5237.6001		20.0000	72.0851	1.0000	66.1651
X-9	723+59.3307	20.0000	5237.5867		20.0000	74.7707	1.0000	68.8507
X-10	723+62.0163	20.0000	5237.5733		20.0000	77.4563	1.0000	71.5362
X-11	723+64.7019	20.0000	5237.5598		20.0000	80.1419	1.0000	74.2218
X-12	723+67.3874	20.0000	5237.5464		20.0000	82.8274	1.0000	76.9074
X-13	723+70.0730	20.0000	5237.5330		20.0000	85.5130	1.0000	79.5930
X-14	723+72.7586	20.0000	5237.5195		20.0000	88.1986	1.0000	82.2785
X-15	723+75.4442	20.0000	5237.5061		20.0000	90.8842	1.0000	84.9641
X-16	723+78.1297	20.0000	5237.4927		20.0000	93.5697	1.0000	87.6497
X-17	723+80.8153	20.0000	5237.4793		20.0000	96.2553	1.0000	90.3353
X-18	723+83.5009	20.0000	5237.4658		20.0000	98.9409	1.0000	93.0208
X-19	723+86.1865	20.0000	5237.4524		20.0000	101.6265	1.0000	95.7064
CL PIER 3	723+89.1681	20.0000	5237.4375		20.0000	104.6081	20.8578	98.6880
CL PIER 3	723+89.1681	20.0000	5237.4375		20.0000	104.6081	20.8578	98.6880
X-1	723+91.0204	20.0000	5237.4282		20.0000	106.4604	1.0000	100.5403
X-2	723+93.1687	20.0000	5237.4175		20.0000	108.6087	1.0000	102.6886
X-3	723+95.3170	20.0000	5237.4067		20.0000	110.7570	1.0000	104.8370
X-4	723+97.4653	20.0000	5237.3960		20.0000	112.9053	1.0000	106.9853
X-5	723+99.6137	20.0000	5237.3853		20.0000	115.0537	1.0000	109.1336
X-6	724+01.7620	20.0000	5237.3744		20.0000	117.2020	1.0000	111.2919
X-7	724+03.9103	20.0000	5237.3632		20.0000	119.3503	1.0000	113.4303
X-8	724+06.0586	20.0000	5237.3515		20.0000	121.4986	1.0000	115.5786
X-9	724+08.2070	20.0000	5237.3395		20.0000	123.6470	1.0000	117.7269
X-10	724+10.3553	20.0000	5237.3272		20.0000	125.7953	1.0000	119.8752
X-11	724+12.5036	20.0000	5237.3144		20.0000	127.9436	1.0000	122.0236
X-12	724+14.6519	20.0000	5237.3013		20.0000	130.0919	1.0000	124.1719
X-13	724+16.8003	20.0000	5237.2876		20.0000	132.2403	1.0000	126.3202
X-14	724+18.9486	20.0000	5237.2739		20.0000	134.3886	1.0000	128.4685
X-15	724+21.0969	20.0000	5237.2596		20.0000	136.5369	1.0000	130.6169
X-16	724+23.2452	20.0000	5237.2450		20.0000	138.6852	1.0000	132.7652
X-17	724+25.3936	20.0000	5237.2300		20.0000	140.8336	1.0000	134.9135
X-18	724+27.5419	20.0000	5237.2146		20.0000	142.9819	1.0000	137.0618
X-19	724+29.6902	20.0000	5237.1988		20.0000	145.1302	1.0000	139.2102
CL ABUT 4	724+32.1346	20.0000	5237.1804		20.0000	147.5746	20.8578	141.6545
BF ABUT 4	724+34.1446	20.0000	5237.1649		20.0000	149.5846	20.8578	143.6645
END WING 4	724+43.1446	20.0000	5237.0914		20.0000	158.5846	20.8578	152.6645

LONGITUDINAL LINE: RIGHT EDGE OF DECK

BENT LINE DESCRIPTION OR FRACTIONAL POINT DESIGNATION	STATION	OFFSET	ELEVATION		COORDINATES FROM LAYOUT LINE OFFSET X	COORDINATES FROM LAYOUT LINE ORDINATE Y	BENT LINE LENGTH FROM Y-AXIS or OFFSET FROM EXTERIOR GIRDER	GIRDER LINE LENGTH
END WING 1	722+81.9241	21.5000	5237.8136		21.5000	-2.6359	22.4221	-9.0000
BF ABUT 1	722+90.9241	21.5000	5237.8168		21.5000	6.3641	22.4221	0.0000
CL ABUT 1	722+92.9341	21.5000	5237.8161		21.5000	8.3741	22.4221	2.0100
X-1	722+94.3424	21.5000	5237.8152		21.5000	9.7824	2.5000	3.4183
X-2	722+96.4907	21.5000	5237.8133		21.5000	11.9307	2.5000	5.5666
X-3	722+98.6390	21.5000	5237.8108		21.5000	14.0790	2.5000	7.7150
X-4	723+00.7873	21.5000	5237.8077		21.5000	16.2273	2.5000	9.8633
X-5	723+02.9357	21.5000	5237.8039		21.5000	18.3757	2.5000	12.0116
X-6	723+05.0840	21.5000	5237.7995		21.5000	20.5240	2.5000	14.1599
X-7	723+07.2323	21.5000	5237.7944		21.5000	22.6723	2.5000	16.3083
X-8	723+09.3806	21.5000	5237.7887		21.5000	24.8206	2.5000	18.4566
X-9	723+11.5290	21.5000	5237.7824		21.5000	26.9690	2.5000	20.6049
X-10	723+13.6773	21.5000	5237.7755		21.5000	29.1173	2.5000	22.7532
X-11	723+15.8256	21.5000	5237.7679		21.5000	31.2656	2.5000	24.9016
X-12	723+17.9739	21.5000	5237.7596		21.5000	33.4139	2.5000	27.0499
X-13	723+20.1223	21.5000	5237.7508		21.5000	35.5623	2.5000	29.1982
X-14	723+22.2706	21.5000	5237.7413		21.5000	37.7106	2.5000	31.3465
X-15	723+24.4189	21.5000	5237.7312		21.5000	39.8589	2.5000	33.4949
X-16	723+26.5672	21.5000	5237.7205		21.5000	42.0072	2.5000	35.6432
X-17	723+28.7156	21.5000	5237.7098		21.5000	44.1556	2.5000	37.7915
X-18	723+30.8639	21.5000	5237.6990		21.5000	46.3039	2.5000	39.9398
X-19	723+33.0122	21.5000	5237.6883		21.5000	48.4522	2.5000	42.0882
CL PIER 2	723+35.9006	21.5000	5237.6738		21.5000	51.3406	22.4221	44.9765
CL PIER 2	723+35.9006	21.5000	5237.6738		21.5000	51.3406	22.4221	44.9765
X-1	723+37.8461	21.5000	5237.6641		21.5000	53.2861	2.5000	46.9221
X-2	723+40.5317	21.5000	5237.6507		21.5000	55.9717	2.5000	49.6076
X-3	723+43.2173	21.5000	5237.6372		21.5000	58.6573	2.5000	52.2932
X-4	723+45.9028	21.5000	5237.6238		21.5000	61.3428	2.5000	54.9788
X-5	723+48.5884	21.5000	5237.6104		21.5000	64.0284	2.5000	57.6644
X-6	723+51.2740	21.5000	5237.5970		21.5000	66.7140	2.5000	60.3499
X-7	723+53.9596	21.5000	5237.5835		21.5000	69.3996	2.5000	63.0355
X-8	723+56.6451	21.5000	5237.5701		21.5000	72.0851	2.5000	65.7211
X-9	723+59.3307	21.5000	5237.5567		21.5000	74.7707	2.5000	68.4067
X-10	723+62.0163	21.5000	5237.5433		21.5000	77.4563	2.5000	71.0922
X-11	723+64.7019	21.5000	5237.5298		21.5000	80.1419	2.5000	73.7778
X-12	723+67.3874	21.5000	5237.5164		21.5000	82.8274	2.5000	76.4634
X-13	723+70.0730	21.5000	5237.5030		21.5000	85.5130	2.5000	79.1490
X-14	723+72.7586	21.5000	5237.4895		21.5000	88.1986	2.5000	81.8345
X-15	723+75.4442	21.5000	5237.4761		21.5000	90.8842	2.5000	84.5201
X-16	723+78.1297	21.5000	5237.4627		21.5000	93.5697	2.5000	87.2057
X-17	723+80.8153	21.5000	5237.4493		21.5000	96.2553	2.5000	89.8913
X-18	723+83.5009	21.5000	5237.4358		21.5000	98.9409	2.5000	92.5768
X-19	723+86.1865	21.5000	5237.4224		21.5000	101.6265	2.5000	95.2624
CL PIER 3	723+89.6121	21.5000	5237.4053		21.5000	105.0521	22.4221	98.6880
CL PIER 3	723+89.6121	21.5000	5237.4053		21.5000	105.0521	22.4221	98.6880
X-1	723+91.0204	21.5000	5237.3982		21.5000	106.4604	2.5000	100.0963
X-2	723+93.1687	21.5000	5237.3875		21.5000	108.6087	2.5000	102.2446
X-3	723+95.3170	21.5000	5237.3767		21.5000	110.7570	2.5000	104.3930
X-4	723+97.4653	21.5000	5237.3660		21.5000	112.9053	2.5000	106.5413
X-5	723+99.6137	21.5000	5237.3553		21.5000	115.0537	2.5000	108.6896
X-6	724+01.7620	21.5000	5237.3444		21.5000	117.2020	2.5000	110.8379
X-7	724+03.9103	21.5000	5237.3332		21.5000	119.3503	2.5000	112.9863
X-8	724+06.0586	21.5000	5237.3215		21.5000	121.4986	2.5000	115.1346
X-9	724+08.2070	21.5000	5237.3095		21.5000	123.6470	2.5000	117.2829
X-10	724+10.3553	21.5000	5237.2972		21.5000	125.7953	2.5000	119.4312
X-11	724+12.5036	21.5000	5237.2844		21.5000	127.9436	2.5000	121.5796
X-12	724+14.6519	21.5000	5237.2713		21.5000	130.0919	2.5000	123.7279
X-13	724+16.8003	21.5000	5237.2578		21.5000	132.2403	2.5000	125.8762
X-14	724+18.9486	21.5000	5237.2439		21.5000	134.3886	2.5000	128.0245
X-15	724+21.0969	21.5000	5237.2296		21.5000	136.5369	2.5000	130.1729
X-16	724+23.2452	21.5000	5237.2150		21.5000	138.6852	2.5000	132.3212
X-17	724+25.3936	21.5000	5237.2000		21.5000	140.8336	2.5000	134.4695
X-18	724+27.5419	21.5000	5237.1846		21.5000	142.9819	2.5000	136.6178
X-19	724+29.6902	21.5000	5237.1688		21.5000	145.1302	2.5000	138.7662
CL ABUT 4	724+32.5786	21.5000	5237.1470		21.5000	148.0186	22.4221	141.6545
BF ABUT 4	724+34.5886	21.5000	5237.1314		21.5000	150.0286	22.4221	143.6645
END WING 4	724+43.5886	21.5000	5237.0577		21.5000	159.0286	22.4221	152.6645

NOTE: ELEVATIONS ARE AT TOP OF CONCRETE DECK .1667 FEET BELOW FINISHED GRADE.

BRIDGE STANDARD 3

REVISIONS

DIVISION OF HIGHWAYS

I-25 & 6 AVE. INTERCHANGE - RAMP 'F' OVER B.N.R.R.

BRIDGE DECK ELEVATIONS

Designer	J. Cornejo	Structure Number	F-16-EG
Detailer	J. McHenry		
Drawing Number B-19	of 20	Drawings	

AS CONSTRUCTED			
NO REVISIONS	7/30/87	REVISED	VOID

FEDERAL ROAD REGION NO.	DIVISION	PROJ. NO.	SHEET NO.	TOTAL SHEETS
VIII	COLORADO	IR25-2(187)	161	~~170~~ 177

REVISIONS		

BRIDGE STANDARD 1

ROADWAY APPROACHES

ELEVATIONS ARE AT FINISHED GRADE

ELEVATIONS ON ROADWAY APPROACHES (AT FINISHED GRADE)

STATION	OFFSETS 24.0000	-12.0000	0.0000	12.0000	16.0000	17.5000
721+40.0	5240.69	5239.97	5239.25	5238.53	5238.29	5238.20
+50.0	40.44	39.92	39.20	38.48	38.24	38.15
+60.0	40.58	39.87	39.15	38.43	38.19	38.11
+70.0	40.51	39.81	39.10	38.39	38.16	38.07
721+80.0	5240.42	5239.74	5239.05	5238.36	5238.13	5238.05
+90.0	40.32	39.66	39.00	38.34	38.12	38.04
722+00.0	40.20	39.58	38.95	38.32	38.12	38.04
+10.0	40.07	39.49	38.90	38.31	38.12	38.04
722+20.0	5239.95	5239.40	5238.85	5238.30	5238.12	5238.05
+30.0	39.82	39.31	38.80	38.29	38.12	38.06
+40.0	39.69	39.22	38.75	38.28	38.12	38.06
+50.0	39.57	39.13	38.70	38.27	38.12	38.07
722+60.0	5239.44	5239.05	5238.65	5238.25	5238.12	5238.07
+70.0	39.31	38.96	38.60	38.24	38.12	38.08
+80.0	39.19	38.87	38.55	38.23	38.12	38.08
+90.0	39.08	38.79	38.50	38.21	38.12	38.08

ELEVATIONS ON ROADWAY APPROACHES (AT FINISHED GRADE)

STATION	OFFSETS -24.0000	-12.0000	0.0000	12.0000	16.0000	17.5000
724+20.0	5238.31	5238.07	5237.83	5237.59	5237.51	5237.48
+30.0	38.24	38.00	37.76	37.52	37.44	37.41
+40.0	38.16	37.92	37.68	37.44	37.36	37.33
+50.0	38.08	37.84	37.60	37.36	37.28	37.25
724+60.0	5237.98	5237.74	5237.50	5237.26	5237.18	5237.15
+70.0	37.88	37.64	37.40	37.16	37.08	37.05
+80.0	37.77	37.53	37.29	37.05	36.97	36.94
+90.0	37.65	37.41	37.17	36.93	36.85	36.82
725+00.0	5237.52	5237.28	5237.04	5236.80	5236.72	5236.69
+10.0	37.33	37.14	36.90	36.66	36.58	36.55
+20.0	37.24	37.00	36.76	36.52	36.44	36.41
+30.0	37.09	36.85	36.61	36.37	36.29	36.26
725+40.0	5236.93	5236.69	5236.45	5236.21	5236.13	5236.10
+50.0	36.76	36.52	36.28	36.04	35.96	35.93
+60.0	36.58	36.34	36.10	35.86	35.78	35.75
+70.0	36.40	36.16	35.92	35.68	35.60	35.57

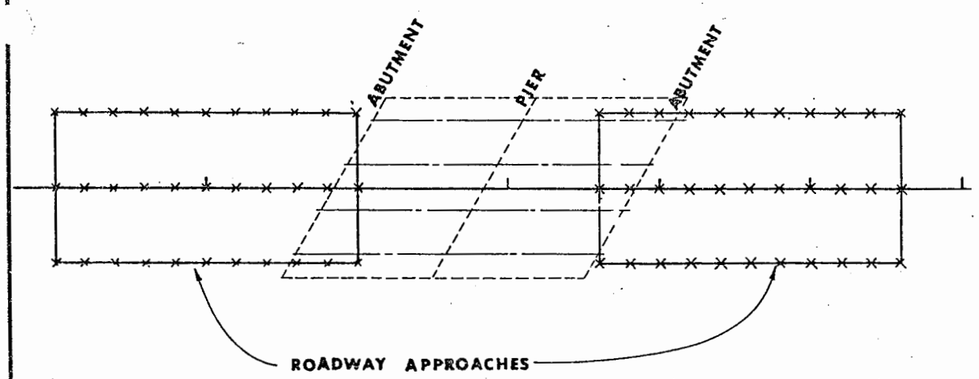

* TANGENT ALIGNMENT

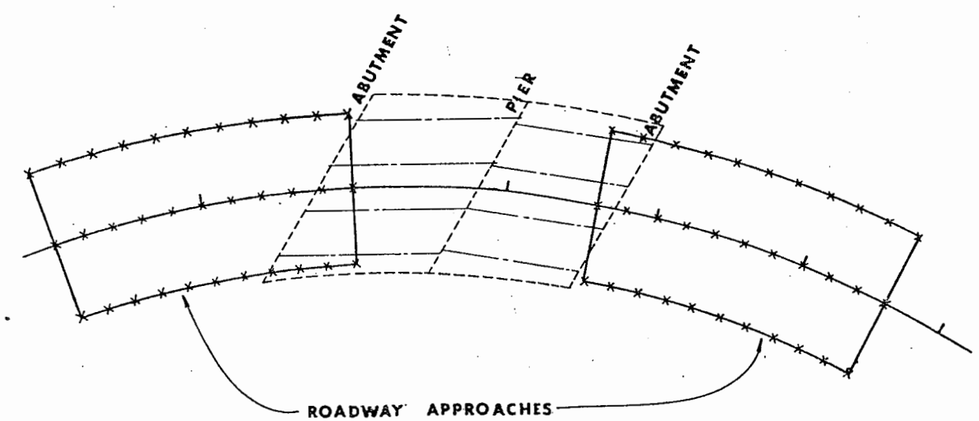

* HORIZONTAL CURVE ALIGNMENT

* THESE DRAWINGS ARE SCHEMATICS ONLY AND DO NOT NECESSARILY REFLECT THE ACTUAL BRIDGE LAYOUT.

DETAILED BY JAM 11/85 CHECKED BY

DIVISION OF HIGHWAYS

I-25 & 6 AVE. INTERCHANGE- RAMP 'F' OVER B.N.R.R.

ROADWAY APPROACHES

Designer	J. Cornejo	Structure Numbers	F-16-EG
Detailer	J. McHenry		
Drawing Number B-20		of 20	Drawings