COLORADO
Department of Transportation

COLORADO DEPARTMENT OF TRANSPORTATION

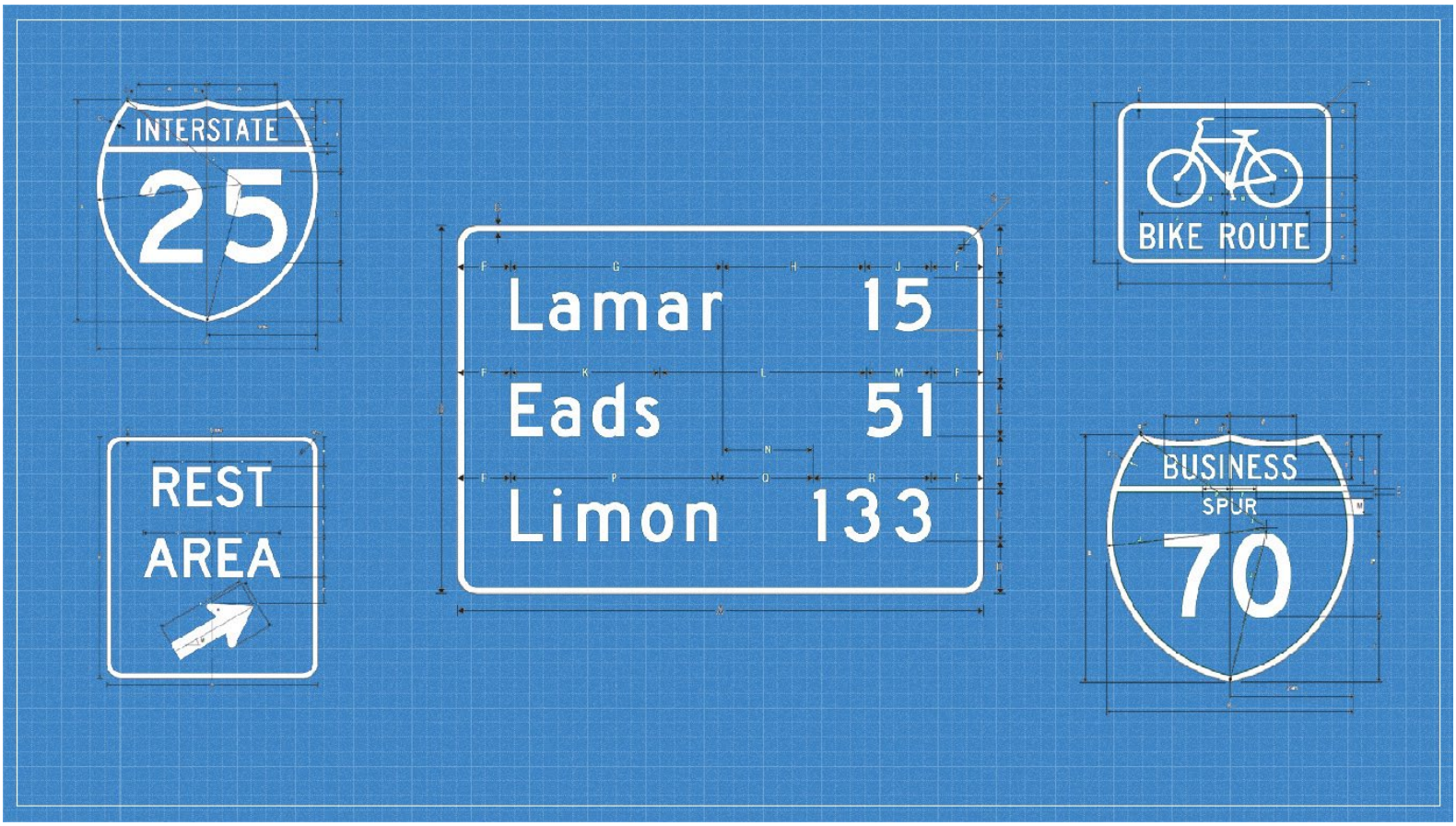

Sign Design Manual

2026 Edition

ACKNOWLEDGEMENTS

FHWA Manual on Uniform Traffic Control Devices (2023)

Standard Highway Signs and Markings (2004)

Standard Highway Signs and Markings (2012 Supplement)

CDOT M&S Standards

Grey Yoakum, CDOT Traffic Safety & Engineering

Esayas Butta, CDOT Traffic Safety & Engineering

Nathan Rivera, CDOT Traffic Safety & Engineering

Yesenya Saucedo Paez, CDOT Traffic Safety & Engineering

Cory Mauracher, CDOT Sign Shop

Region Traffic Units

In Conjunction With

KC Matthews, CDOT Traffic Safety & Engineering, Retired

Jim Williams, CDOT Traffic Safety & Engineering, Retired

Ken Nakao, CDOT Traffic Safety & Engineering, Retired

Paul Neiman, Former CDOT Region I

Ben Kiene, Former CDOT Region I

Gary Shackleton, CDOT Sign Shop, Retired

Bernard Cole, Former CDOT Sign Shop

Jimmy Biren, CDOT Region 2

Tom DiNardo, CDOT Region I

Anthony Vu, CDOT Traffic Safety & Engineering

COLORADO
Department of Transportation

Published on February 6th, 2026
by HQ Traffic Safety and Engineering
2829 West Howard Place, 3rd Floor
Denver, CO 80204
Telephone: (303) 757-9654
Fax: (303) 757-9219

TABLE OF CONTENTS

INTRODUCTION 1

GENERAL SIGN DESIGN GUIDELINES 1

Panel Dimensions 1
Borders and Corner Radii 1
Placement of Text and Objects 2
Text Formatting 3
History and Guidance on Font Usage 4
Symbols and Graphics 4
Multi-Panels 4

ARROWHEADS 4

Standard Arrowheads 4
Up Arrows 5
Down Arrows 6
Advance Arrow 7
Pull-Through Signs 8

SUBMITTAL PROTOCOLS 9

INTRODUCTION

There are general guidelines to follow in the design of highway signs in order to conform to basic standards. Many of these guidelines are mentioned in various sections of the *Manual on Uniform Traffic Control Devices* (MUTCD) and the *Standard Highway Signs and Markings* (SHS), while others are derived from accepted practice in sign design and layout. This manual summarizes the guidelines that the Colorado Department of Transportation (CDOT) uses to assure conformity and constructability when designing non-standard signs.

We have developed a CDOT Sign Library that contains examples of all the types of signs discussed in this manual. In general, it is our intent to include sufficient coverage in the sign library that the designer should be able to use the examples as templates for nearly any sign. Although some guide signs have been standardized, most guide signs need to be designed separately because of the different messages or legends. Designers are encouraged to submit any cases to the Traffic Safety & Engineering Branch at Headquarters where a suitable template was not found, so that the appropriate addition may be made to the library.

GENERAL SIGN DESIGN GUIDELINES

PANEL DIMENSIONS

Message variability controls the overall sign panel dimensions. Whenever practical, the overall dimensions of the sign should be in increments as shown in **Table 1**:

Table 1: Sign Panel Increments

Panel Dimension	Sign Panel Increments
$\leq 48"$	6"
$> 48"$	12"

However, in certain scenarios, a variance in the sign panel dimensions may be justified. For instance, a sign mounted over a roadway lane to which the sign applies may have to be limited in width, to the roadway lane width. In some cases, vertical clearances may limit the vertical dimension of the sign. On the other hand, a larger than nominal sign may be desirable where greater legibility or emphasis is needed.

BORDERS AND CORNER RADII

The corners of all sign borders shall be rounded. The corners for signs where the smaller dimension size, width or height, is less than or equal to 48 inches shall be trimmed. With few exceptions, the MUTCD requires all signs to have a border of the same color as the legend. A dark border should be set in from the edge (indent), while a white border should extend to the edge of the panel.

The following guidelines shown in **Diagram 1** and **Table 2** may be used to determine border widths, corner radii, and indent specifications:

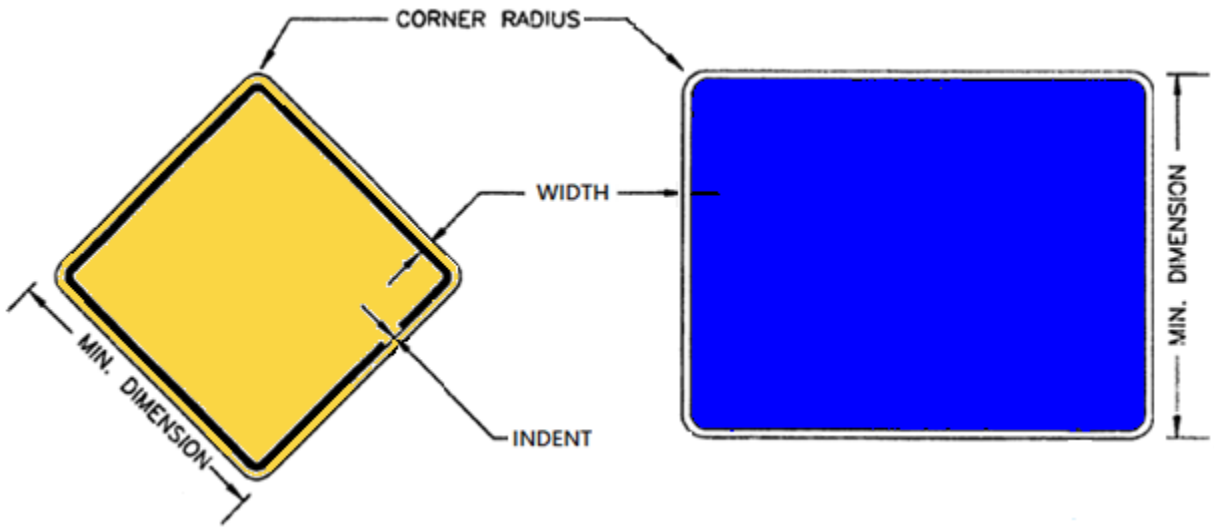

Diagram 1: Border Widths, Corner Radii and Indent Specifications

Table 2: Border Widths, Corner Radii and Indent Specifications

Minimum Dimensions		12"	18"	24"	30"	36"	42"	48"	48"	60"	72"	84"	≥ 96"
Trim Corners		Yes							No				
With Indent	Width	0.375	0.625	0.625	0.750	0.875	0.875	1.250	1.250	1.250	1.500	1.500	2.000*
	Corner Radius	1.500	1.500	1.500	2.000	2.000	2.000	3.000	3.000	6.000	9.000	9.000	12.00
	Indent	0.375	0.375	0.375	0.500	0.625	0.625	0.750	0.750	0.750	0.750	0.750	0.750
Without Indent	Width	0.500	0.500	0.625	0.875	1.000	1.000	1.250	1.250	1.250	1.500	1.500	2.000*
	Corner Radius	1.500	1.500	1.500	2.000	2.000	2.000	3.000	6.000	7.500	9.000	9.000	12.00

*2.5 inch borders may be used for unusually large signs per MUTCD Section 2E.14.

Placement of Text and Objects

Alignment

Guide sign text must be centered horizontally and vertically on the sign panel to achieve a good appearance. Where arrows, route markers or other objects are closer to the sign border than text, the virtual box that contains all of the sign objects should be centered. In other words, the smallest distance from any object on the sign panel from the left edge of the sign should equal the smallest distance from any object to the right edge, and similarly for the top and bottom edges.

Spacing

The spacing distances guidelines are as follows:

1. **Interline Spacing**
   a) The spacing between lines should be, at minimum, approximately ¾ the average uppercase letter heights of the adjacent lines.
2. **Spacing to Edges**
   a) The spacing to the top and bottom borders should be approximately equal to the average of the letter height of the adjacent line of letters.
   b) The lateral spacing to the vertical borders should be the same as the height of the largest letter.
3. **Spacing Between Objects**
   a) Spacing between words, words and arrows, a letter and an arrow, or a word and a number in a line copy should be approximately one (1) to one and one-half (1.5) times the uppercase letter height used in that line of copy.
   b) Spacing between a shield and the cardinal direction should be approximately ¾ the height of the smaller letters in the adjacent lines of letters.

TEXT FORMATTING

All word messages shall use standard wording, letters and fonts as shown in the MUTCD and in the SHS. The font on expressway and freeway guide signs should generally be "E" for words that are all upper case letters and "E- Mod" for upper and lower case letters. Tables 2D-2 and 2E-2 through 2E-5 of the MUTCD provide detailed guidance for sizes of letters, numerals and other objects on guide signs. Where guidance to a specific sign is not provided, the minimum sizes should be exceeded when conditions indicate a need for greater legibility.

All names of places, streets and highways on freeway and expressway guide signs shall use lower-case letters with initial upper-case letters. All other sign lettering shall be in upper-case letters, unless otherwise provided in the MUTCD for a particular sign or type of message. See Section 2D.05 and 2E.12 of the MUTCD for more details.

Word messages should be as brief as possible and the lettering should be large enough to provide the necessary legibility distance. A minimum specific ratio of one (1)-inch of letter height per 30 feet of legibility distance should be used.

Kerning is used to modify the letter spacing. This could reduce the legibility of the sign, but may be justified when the required text cannot be made to fit on the maximum allowable panel size by any other layout modifications. If kerning must be applied, it should only be applied to the text that needs to be modified. The degree of kerning should be within the range of 75% to 125%. Use of kerning is considered to be a design variance and must be documented in the project file.

Note: To use the 2000 series Standard Alphabets (2K Font) in SignCAD, the US 2009 standard file type has to be chosen. The Highway Plus series fonts shall be used in the Colorado Department of Transportation standard file type. SignCAD labels the supported font per standard. There are issues with unsupported font letter spacing and the text string collapsing when a sign is imported into the wrong standard.

History and Guidance on Font Usage

CDOT has adopted the 1977 Federal font standard as well as the 2000 Series Federal font. Previously, Colorado has employed special Colorado Modified fonts that used wider letter strokes. Other non-standard font styles have previously been used by Colorado for reasons of practicality. The designer should not be confused by any remnant documentation that might reference these obsolete styles.

Symbols and Graphics

In general, you should use a high resolution clean vector file for placing graphics into sign layouts. Acceptable formats include: PDF, EPS and AI. In rare cases you may need to create a special graphic. To create a special graphic, contact the Traffic Safety & Engineering Branch.

Multi-Panels

When designing multiple overhead sign panels that will be adjacent to each other, always make sure they are of equal height. In addition, align like objects vertically on each sign whenever possible.

Arrowheads

The "Standard Arrowhead" is for all types of signs, with few exceptions, including guide signs. The "Up" and "Down" arrows are to be used for guide signs and recommended applications, as stated in Section 2D.08 of the MUTCD. The minimum spacing from an arrow to the sign border should be four (4) inches. For examples of signs using arrows, go to the CDOT Sign Library web page. The usage for arrowheads are summarized in **Table 3**.

Table 3: Border Widths, Corner Radii and Indent Specifications

Arrow Type	Usage
Standard Arrowhead	All Signs, excluding guide signs and any interstate signs.
Up Arrowhead	Primarily on Exit Signs, Directional Signs and Gore Signs.
Down Arrowhead	Lane designation **ONLY**.
Advance Arrowhead	Conventional road guide signs placed in advance of an intersection where a turn must be made.

Standard Arrowheads

"Standard arrowheads" conform to the dimensions specified on page 6-2 of the SHS. They are used primarily on approach road signs on lower speed roadways and should never be used on overhead signs or any Interstate guide signs. The sizing chart in the SHS book lists 27 arrow sizes. SignCAD has most of those sizes programmed in for selection. However, most of the standard sizes do not result in nice, even total arrowhead widths. Therefore, they will be hard to exactly match up with sign font sizes when placing horizontal arrows on signs. For most arrows, the arrow size should be

selected so the head width equals the height of the largest letter on the sign. In cases where there is only one arrow on the sign and that arrow is vertical or at an angle, a larger arrowhead size can be used.

Below is **Diagram 2** of the Standard Arrow detail as well as the arrowhead parameters values that are preprogrammed into SignCAD for the designer to select from, to obtain arrows of widths that will match common letter sizes. In addition to the arrowhead size, the designer will need to specify a length for these arrows.

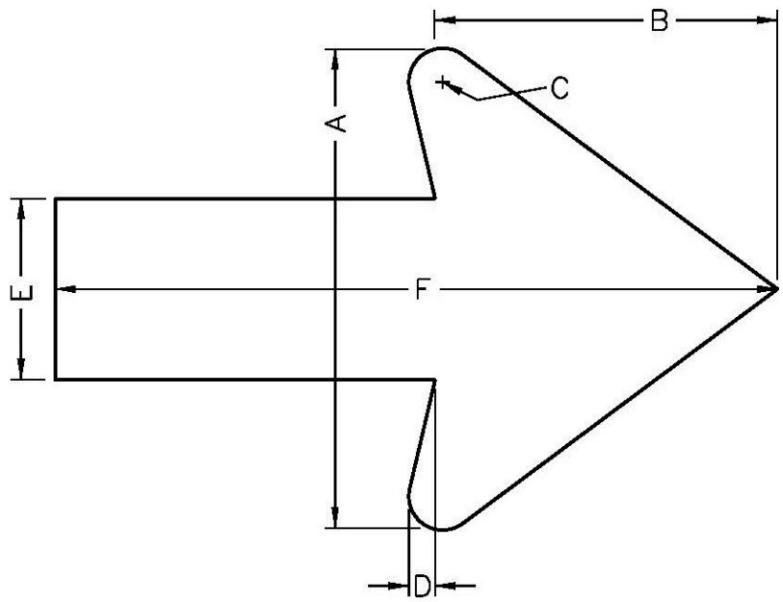

Diagram 2: Standard Arrow

Head Width (A)	Head Length (B)	Radius (C)	Draft (D)	Shaft (E)	Length (F)
4"	3.063"	0.313"	0.250"	1.500"	6" or 12"
6"	4.500"	0.438"	0.375"	2.250"	9" or 18"
8"	6.125"	0.563"	0.438"	3.000"	12" or 24"
10"	7.625"	0.750"	0.563"	3.750"	16" or 32"

Up Arrows

The "Up Arrow" with a 60° angle is used primarily on Exit Signs, Directional Signs and Gore Signs. Visually the "Up Arrow" design differs from the "Standard Arrow" design in that:

- The Up Arrow has a tapered shaft vs. a straight shaft on the Standard Arrow
- The Up Arrow has a round tip vs. a pointed tip on the Standard Arrow

There are three standard arrowhead sizes for this type of arrow, corresponding to the font size of the text to which the arrow pertains (8-inch, 10 - 13.3-inch and 16-inch), each with two shaft length options. The designer should select from these standard arrows, using the largest font size on the sign as the determining factor. **Diagram 3** below summarizes the geometries of the Up Arrow. For most applications, use either the 18.25-inch arrow with the shorter 20-inch shaft length, or a 22.25-inch arrow with the longer 35-inch shaft length.

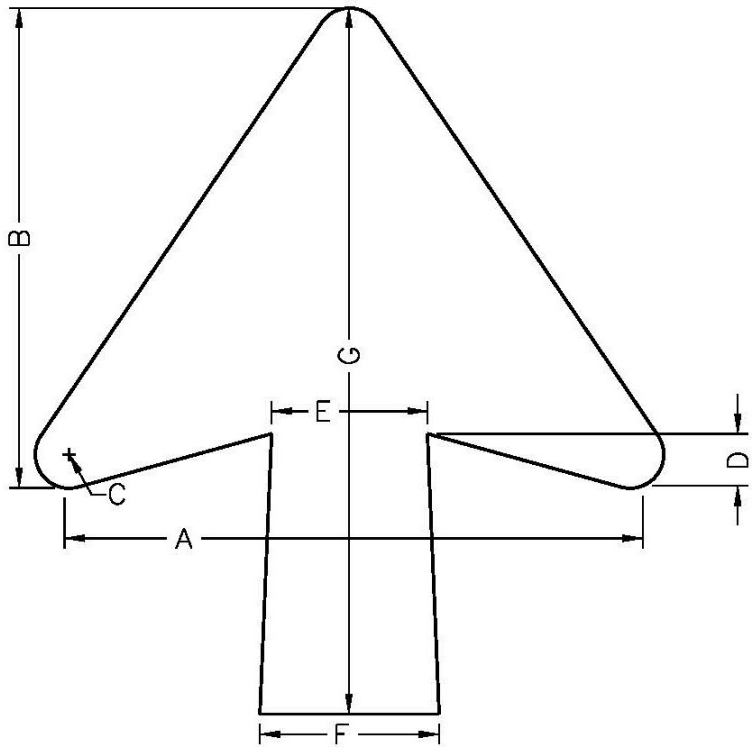

Diagram 3: Up Arrow

Letter Size	Head Width (A)	Head Length (B)	Radius (C)	Draft (D)	Shaft at Head (E)	Shaft at End (F)	Length (G)
8"	15.125"	11.563"	0.813"	1.313"	3.750"	4.3125" or 4.98"	17" or 25"
10 – 13.33"	18.250"	14.000"	0.750"	1.500"	4.500"	5.1250" or 5.96"	20" or 30"
16"	22.250"	17.000"	1.000"	1.750"	5.375"	6.1875" or 7.00"	25" or 35"

Down Arrows

The "Down Arrow" is used only for exit lane designation. This arrow will nearly always be of the standard size 22-inch height shown in the SHS and preprogrammed into SignCAD. In special cases, such as on off-ramps or on lower speed facilities, a smaller

arrow might be needed. In this case, a 16.5-inch height is used. **Diagram 4** below summarizes the geometries of the Down Arrow.

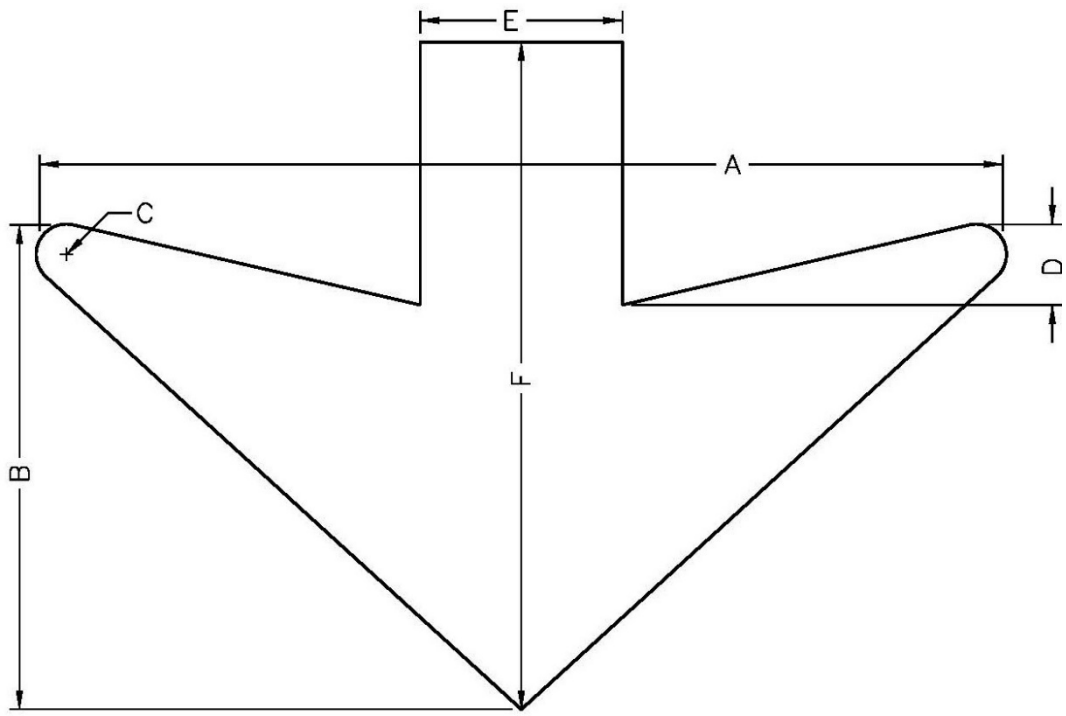

Diagram 4: Down Arrow

Head Width (A)	Head Length (B)	Radius (C)	Draft (D)	Shaft (E)	Length (F)
24"	12.00"	0.75"	2.00"	5.00"	16.50"
32"	16.00"	1.00"	3.00"	6.50"	22.00"

Note: Down Arrows should always be positioned so they are directly over the center of the lane. Therefore, their spacing should equal the lane width, which would typically be 12 Feet (144 Inches), but may be less on off-ramps or lower speed facilities.

Historical Note: Colorado formerly listed the two Down Arrow sizes in the Colorado Supplement to SHS, using the terminology "Type C" arrows, along with size specific designations, e.g. AR-Cl and AR-C2. The more standard terminology and sizing described above has been adopted in its place.

Advance Arrow

The “Advance Turn Arrow” should be used on conventional road guide signs placed in advance of an intersection where a turn must be made to reach a posted destination or group of destinations. Use of the Advance Turn Arrow may be used beneath the legend of an overhead guide sign to indicate the fact that a turn must be made from a mandatory movement lane over which the sign is placed to reach the destination or

destinations displayed on the sign. Below is **Diagram 5** of the advance turn arrow detail as well as the arrowhead parameters values that can be entered into SignCAD using "Custom" for the size, to obtain arrows of widths that will match common letter sizes.

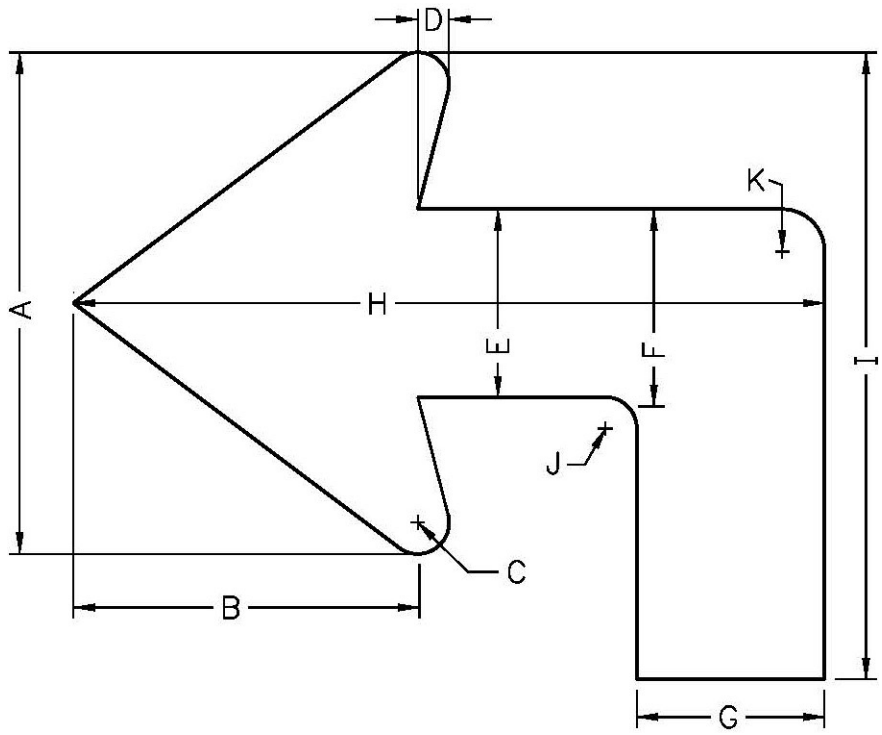

Diagram 5: Advance Turn Arrow

Head Width (A)	Head Length (B)	Head Radius (C)	Head Draft (D)	Shaft (E)	Shaft at Bend (F)	Shaft at Base (G)	Overall Width (H)	Overall Height (I)	Inner Bend Radius (J)	Outer Bend Radius (K)
6"	4.500"	0.4375"	0.375"	2.25"	2.25"	2.25"	9.00"	7.50"	0.375"	0.625"
8"	6.000"	0.5000"	0.500"	3.00"	3.00"	3.00"	12.00"	10.00"	0.500"	0.675"
10"	7.500"	0.6250"	0.625"	4.00"	4.00"	4.00"	15.00"	12.00"	0.625"	0.875"
13.33"	11.125"	1.0000"	1.015"	5.00"	5.00"	5.00"	20.00"	16.00"	0.500"	1.000"

Pull-Through Signs

Pull-Through signs should be used where the geometrics of a given interchange are such that it is not clear to the road user as to which is the through roadway, or where additional route guidance is desired. Pull-Through signs with down arrows should be used where the alignment of the through lanes is curved and the exit direction is straight ahead, where the number of through lanes is not readily evident, and at multi-lane exits where there is a reduction in the number of through lanes.

The text and arrows should be centered vertically within the yellow area. The words should be centered between the arrow and the edge of the panel for the single arrow design.

For the double arrow design, the words shall be centered between the two arrows. The arrows shall be positioned approximately over the center of each lane and shall point vertically downward toward the approximate center of that lane.

For the Colorado specific design for multi-lane exits with an option lane, the sign shall be split into two parts. The side closest to the dropped lane shall have the exit panel occupied with text and a diagonally upward-pointing arrow centered within the yellow area. The remaining sign area shall have a similar upward arrow in white placed within the green area. The direction arrows shall be located directly over the center of the respective lanes. See Chapter 2E of the 11th Edition Colorado Supplement to the MUTCD for more guidance.

Submittal Protocols

To order a sign, a traffic sign order form needs to be completed. Form CDOT 0547 can be found on the Sign Shop website.

If results, analysis, or studies from CDOT's Sign Design Manual are used and included in official documents for a CDOT project in the project development process, the Project Engineer and Resident Engineer shall follow the requirements of PD 21.1 and PD 508.1 for records retention and sealing. While CDOT Form 0547 is currently accepted in paper format, CDOT prefers that the form be submitted in PDF format and provided via email to the Sign Shop manager.

This page was left blank intentionally.

Copyright © 2019 Anthony K. Vu

COLORADO
Department of Transportation